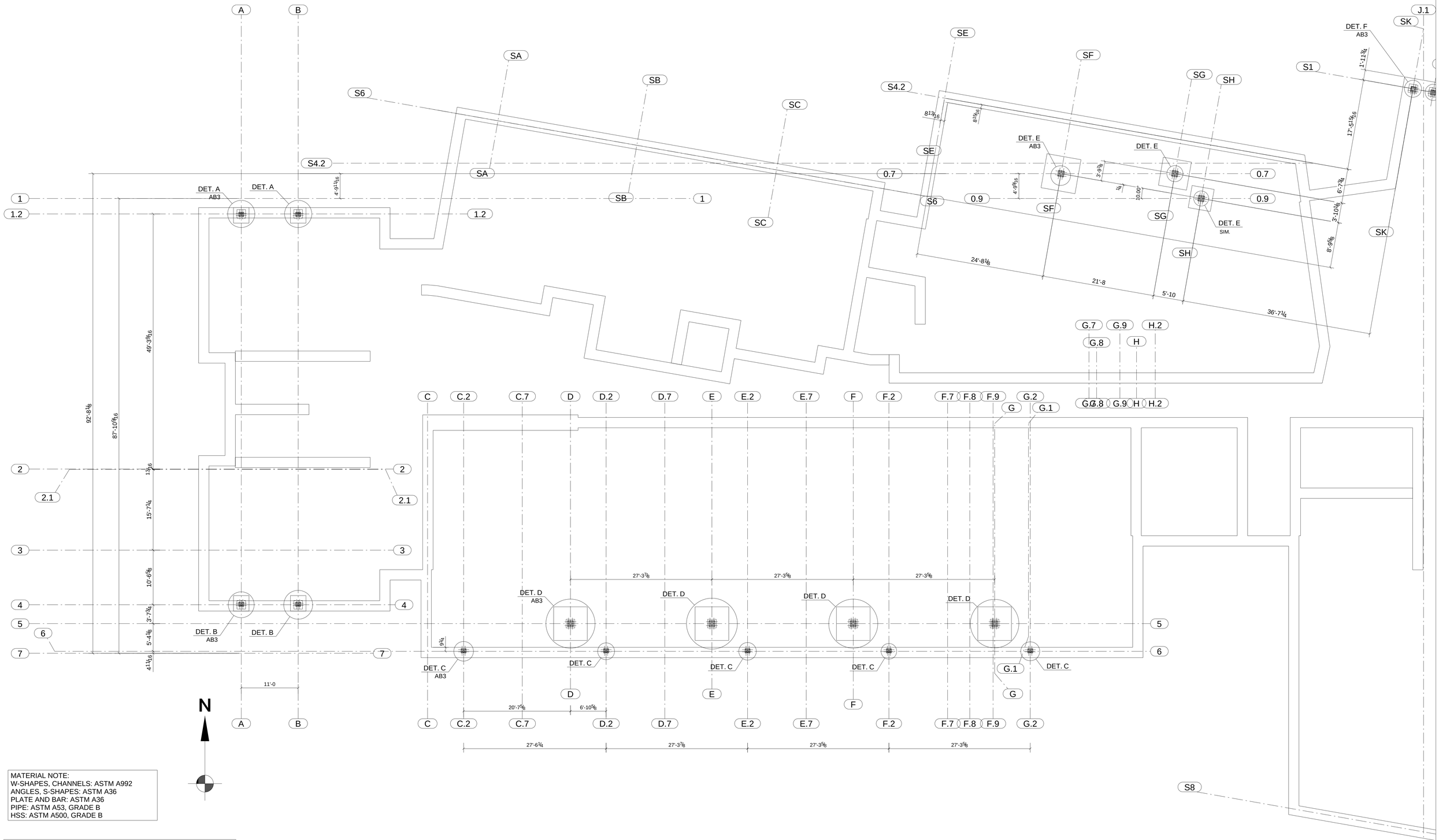

MATERIAL NOTE:
W-SHAPES, CHANNELS: ASTM A992
ANGLES, S-SHAPES: ASTM A36
PLATE AND BAR: ASTM A36
PIPE: ASTM A53, GRADE B
HSS: ASTM A500, GRADE B

7) APPROVER / GC VERIFY ALL E PLAN ELEVATIONS PRIOR TO FAB.
6) WEEP HOLES FOR GALVANIZED MEMBERS PER GALVANIZERS SPECS.
5) NO PAINT WITHIN 3" OF OPEN HOLES FOR SC BOLTS.
4) ALL MATERIAL AS NOTED.
3) 1-1/4 " EDGE DISTANCE UNLESS NOTED (1-1/2" ON BASE PLATES U.N.).
2) GRIND ALL ROUGH EDGES SMOOTH
1) ALL WELDS 3/16" FILLETS OR BUTT WELDS, UNLESS NOTED, PROCEDURES PER AWS D.1.1 LATEST REV.

GENERAL NOTES:

ANCHOR SETTING PLAN - AREA A

SCALE: 1/8" = 1'-0" (1:96)

DATE	NO.	DESCRIPTION	BY
4/18/11	A	For Approval	TMc

STEEL ASTM	A992	UNO
ELECTRODES	E70XX L.H.	UNO
WELDS	1/4" FILLET	UNO
OPEN HOLES	13/16"	UNO
BOLTS	3/4" A325N	UNO
PAINT	AS NOTED	UNO

PROJECT NAME: OLDE ORCHARD ELEMENTARY SCHOOL
LOCATION: 800 McNAUGHTEN RD. COLUMBUS, OHIO 43213
CONTRACTOR: ADENA CORPORATION
ARCHITECT: BRAUN & STEIDL

North Central Fabrications, Ltd.

NORTH CENTRAL FABRICATION
Mansfield, OH 44906
419-529-2744 FAX 419-529-5387 http://www.northcentralfabrication.com/

DESCRIPTION: ANCHOR BOLT PLAN - AREA A
DATE: 04/18/2011
DRAWN BY: T. Mc
JOB No.: 70234
DRG No.: AB1

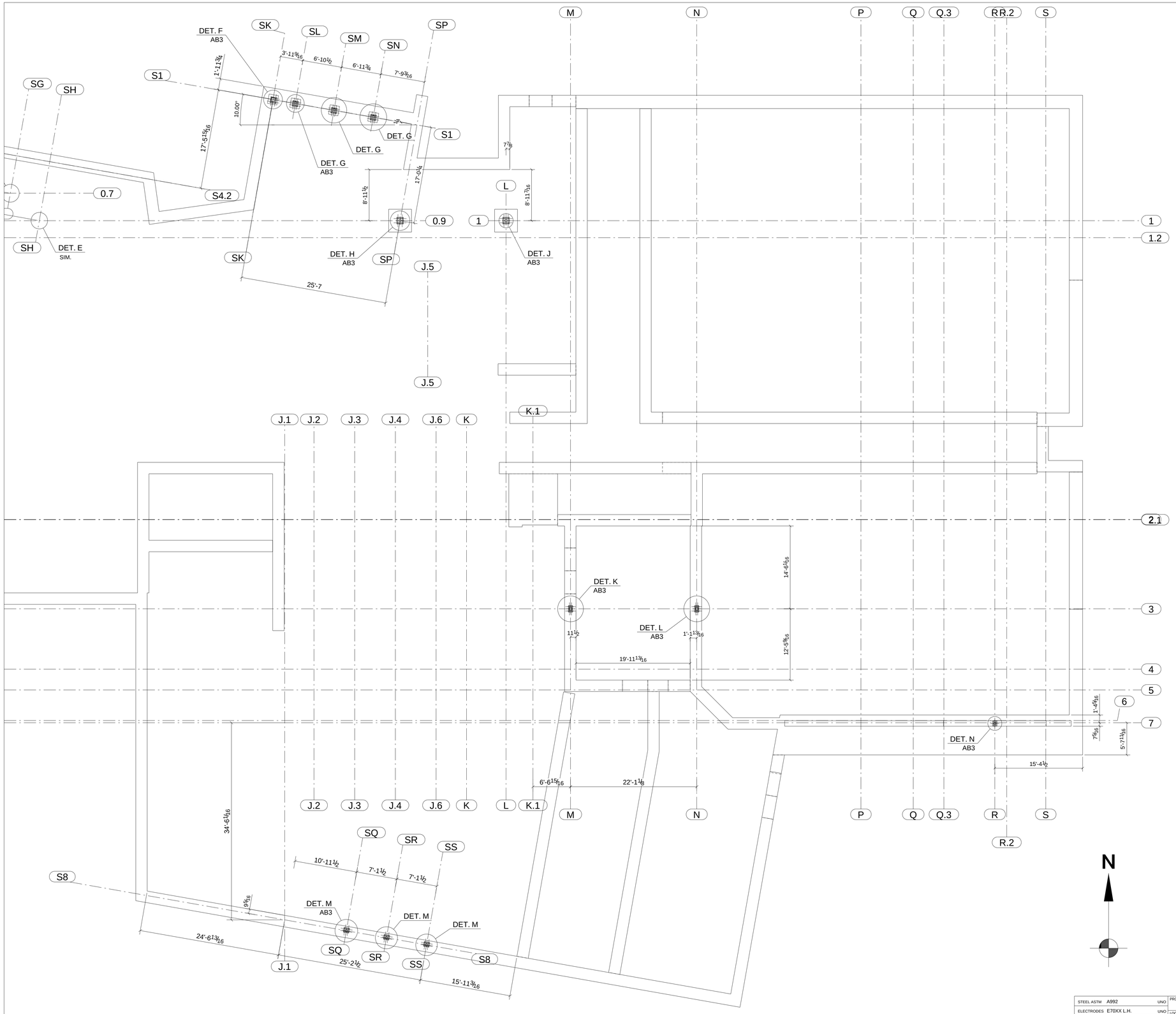

ANCHOR SETTING PLAN - AREA B

SCALE: 1/8" = 1'-0" (1:96)

MATERIAL NOTE:
W-SHAPES, CHANNELS: ASTM A992
ANGLES, S-SHAPES: ASTM A36
PLATE AND BAR: ASTM A36
PIPE: ASTM A53, GRADE B
HSS: ASTM A500, GRADE B

7) APPROVER / GC VERIFY ALL E PLAN ELEVATIONS PRIOR TO FAB.
6) WEEP HOLES FOR GALVANIZED MEMBERS PER GALVANIZERS SPECS.
5) NO PAINT WITHIN 3" OF OPEN HOLES FOR SC BOLTS.
4) ALL MATERIAL AS NOTED.
3) 1-1/4 " EDGE DISTANCE UNLESS NOTED (1-1/2" ON BASE PLATES U.N.).
2) GRIND ALL ROUGH EDGES SMOOTH
1) ALL WELDS 3/16" FILLETS OR BUTT WELDS, UNLESS NOTED, PROCEDURES PER AWS D.1.1 LATEST REV.

GENERAL NOTES:

STEEL ASTM	A992	UNO
ELECTRODES	E70XX L.H.	UNO
WELDS	1/4" FILLET	UNO
OPEN HOLES	13/16"	UNO
BOLTS	3/4" A325N	UNO
PAINT	AS NOTED	UNO

DATE	NO.	DESCRIPTION	BY
4/18/11	1	For Approval	TMc

PROJECT NAME: OLDE ORCHARD ELEMENTARY SCHOOL
LOCATION: 800 McNAUGHTEN RD. COLUMBUS, OHIO 43213
CONTRACTOR: ADENA CORPORATION
ARCHITECT: BRAUN & STEIDL

North Central Fabrication, Ltd.

NORTH CENTRAL FABRICATION
Mansfield, OH 44906
419-529-2744 FAX 419-529-5387 http://www.northcentralfabrication.com/

DESCRIPTION: ANCHOR BOLT PLAN - AREA B
DATE: 04/18/2011
DRAWN BY: T. Mc
JOB No.: 70234
DRG No.: AB2

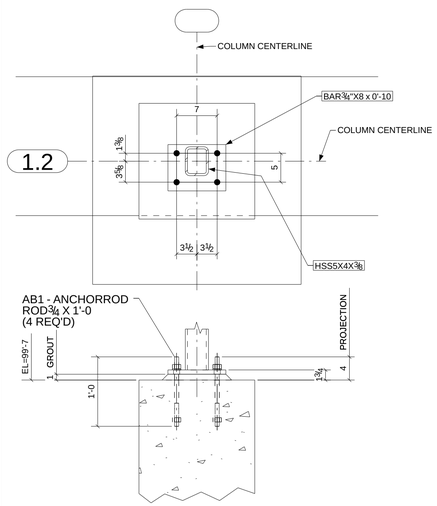

DETAIL ~ A
1:12

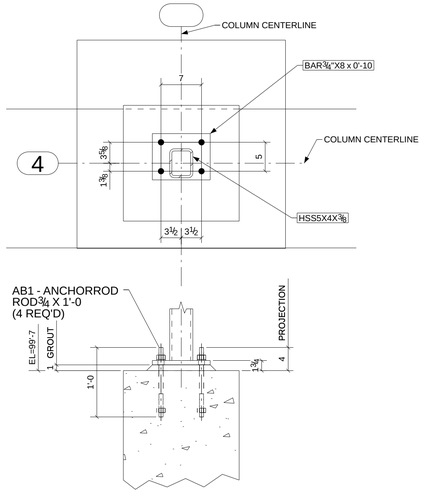

DETAIL ~ B
1:12

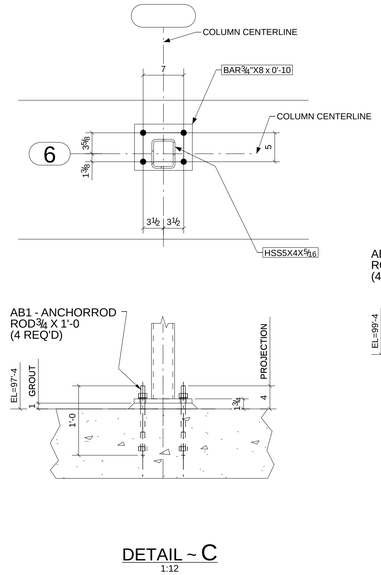

DETAIL ~ C
1:12

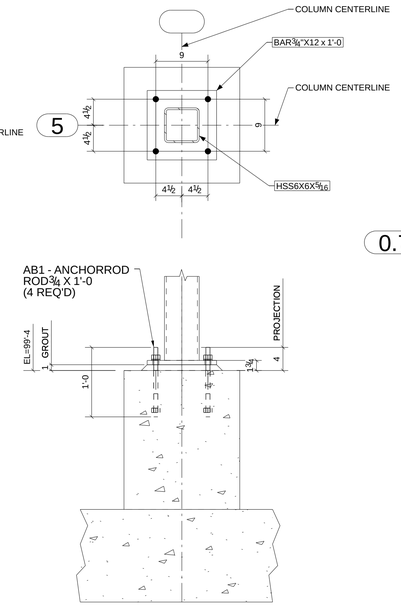

DETAIL ~ D
1:12

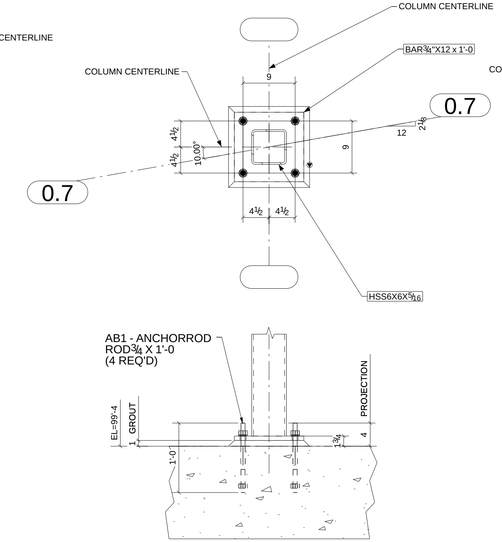

DETAIL ~ E
1:12

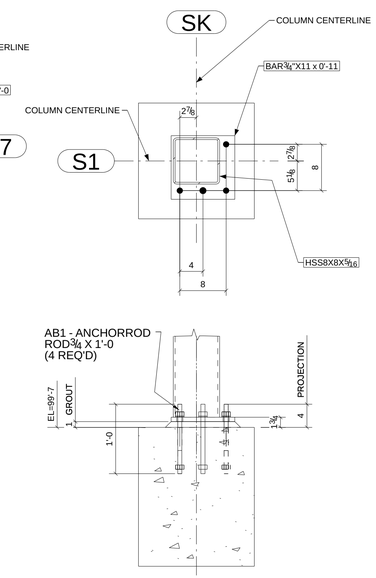

DETAIL ~ F
1:12

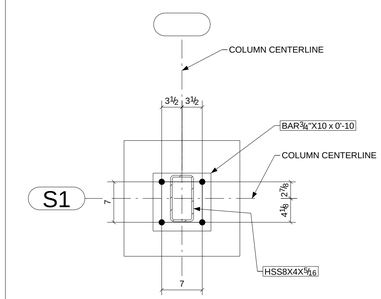

DETAIL ~ G
(ROTATED 10 DEGREES CCW) -
1:12

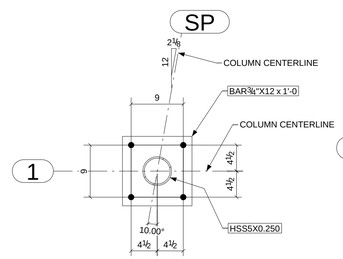

DETAIL ~ H
1:12

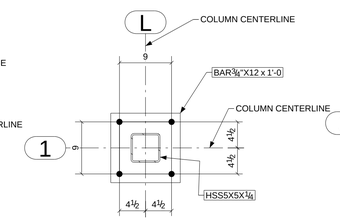

DETAIL ~ J
1:12

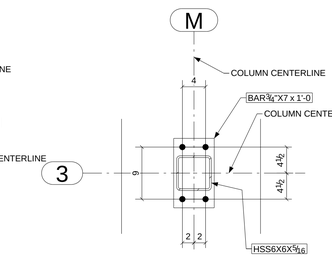

DETAIL ~ K
1:12

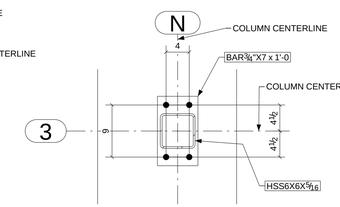

DETAIL ~ L
1:12

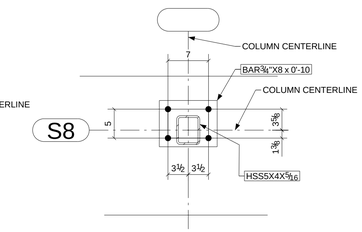

DETAIL ~ M
(ROTATED 10 DEGREES CCW) -
1:12

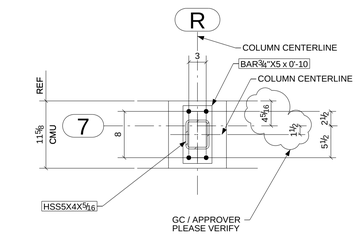

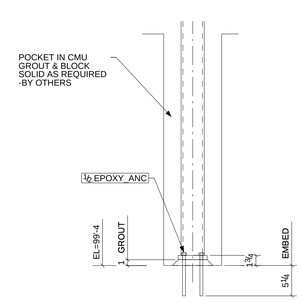

DETAIL ~ N
1:12

7) APPROVER / GC VERIFY ALL E PLAN ELEVATIONS PRIOR TO FAB.
6) WEEP HOLES FOR GALVANIZED MEMBERS PER GALVANIZERS SPECS.
5) NO PAINT WITHIN 3" OF OPEN HOLES FOR SC BOLTS.
4) ALL MATERIAL AS NOTED.
3) 1-1/4 " EDGE DISTANCE UNLESS NOTED (1-1/2" ON BASE PLATES U.N.).
2) GRIND ALL ROUGH EDGES SMOOTH
1) ALL WELDS 3/16" FILLETS OR BUTT WELDS, UNLESS
NOTED, PROCEDURES PER AWS D.1.1 LATEST REV.

GENERAL NOTES:

MATERIAL NOTE:
W-SHAPES, CHANNELS: ASTM A992
ANGLES, S-SHAPES: ASTM A36
PLATE AND BAR: ASTM A36
PIPE: ASTM A53, GRADE B
HSS: ASTM A500, GRADE B

DATE	NO.	DESCRIPTION	BY
4/18/11	A	For Approval	TMc

STEEL ASTM	A992	UNO
ELECTRODES	E70XX L.H.	UNO
WELDS	1/4" FILLET	UNO
OPEN HOLES	13/16"	UNO
BOLTS	3/4" A325N	UNO
PAINT	AS NOTED	UNO

PROJECT NAME: OLDE ORCHARD ELEMENTARY SCHOOL
LOCATION: 800 McNAUGHTEN RD. COLUMBUS, OHIO 43213
CONTRACTOR: ADENA CORPORATION
ARCHITECT: BRAUN & STEIDL

North Central Fabrication, Ltd.

NORTH CENTRAL FABRICATION
Mansfield, OH 44906
419-529-3744 FAX 419-529-3387 http://www.northcentralfabrication.com/

DESCRIPTION: ANCHOR BOLT SETTING DETAIL
DATE: 04/17/2011
DRAWN BY: T. Mc
JOB No.: 70234
DRG No.: AB3

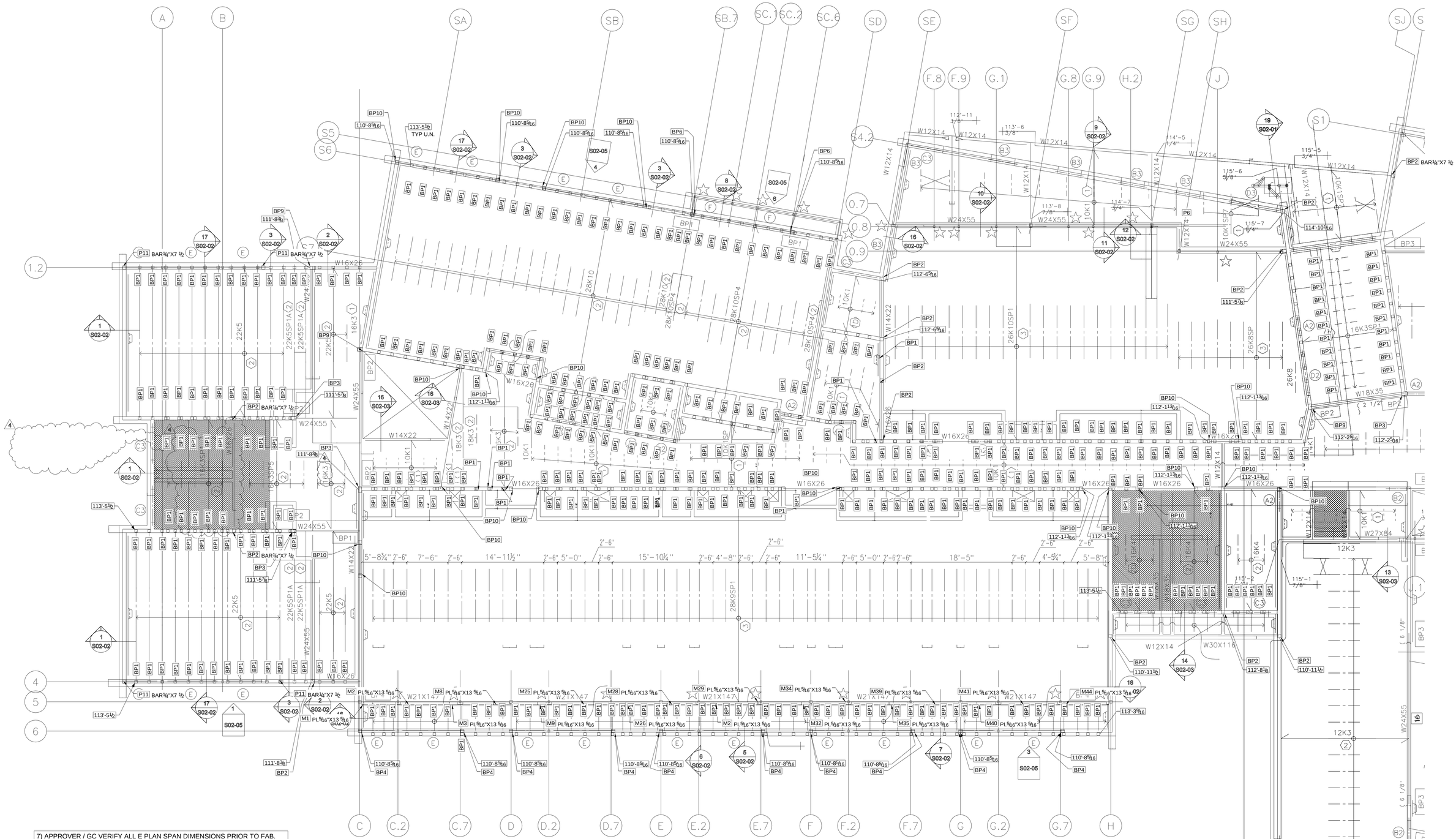

7) APPROVER / GC VERIFY ALL E PLAN SPAN DIMENSIONS PRIOR TO FAB.
6) WEEP HOLES FOR GALVANIZED MEMBERS PER GALVANIZERS SPECS.
5) NO PAINT WITHIN 3" OF OPEN HOLES FOR SC BOLTS.
4) ALL MATERIAL AS NOTED.
3) 1-1/4 " EDGE DISTANCE UNLESS NOTED (1-1/2" ON BASE PLATES U.N.).
2) GRIND ALL ROUGH EDGES SMOOTH
1) ALL WELDS 3/16" FILLETS OR BUTT WELDS, UNLESS NOTED, PROCEDURES PER AWS D.1.1 LATEST REV.

GENERAL NOTES:

N

MATERIAL NOTE:
W-SHAPES, CHANNELS: ASTM A992
ANGLES, S-SHAPES: ASTM A36
PLATE AND BAR: ASTM A36
PIPE: ASTM A53, GRADE B
HSS: ASTM A500, GRADE B

G.C.: COORDINATE BEARING PLATE PLACEMENT WITH JOIST SUPPLIER SHOP & FIELD DRAWINGS

EMBEDS - 2ND FLOOR & BELOW - AREA 'A'

STEEL ASTM	A992		UNO
ELECTRODES	E70XX L.H.		UNO
WELDS	1/4" FILLET		UNO
OPEN HOLES	13/16"		UNO
BOLTS	3/4" A325N		UNO
PAINT	1 S/C STD PRIMER U.N		UNO

DATE	NO.	DESCRIPTION	BY
5/16/11	2	For Approval	TMc

PROJECT NAME: OLDE ORCHARD ELEMENTARY SCHOOL
LOCATION: 800 McNAUGHTEN RD. COLUMBUS, OHIO 43213
CONTRACTOR: THOMAS AND MARKER CONSTRUCTION
ARCHITECT: BRAUN & STEIDL

North Central Fabricators Ltd.
NORTH CENTRAL FABRICATION
Mansfield, OH 44906
419-529-2744 FAX 419-529-1587 http://www.northcentralfabrication.com/
AISC CERTIFIED FABRICATOR

DESCRIPTION: EMBEDS - 2ND FLOOR & BELOW - AREA 'A'
DATE: 05/12/2011
DRAWN BY: TMc
JOB No.: 70234
DRG No.: E1

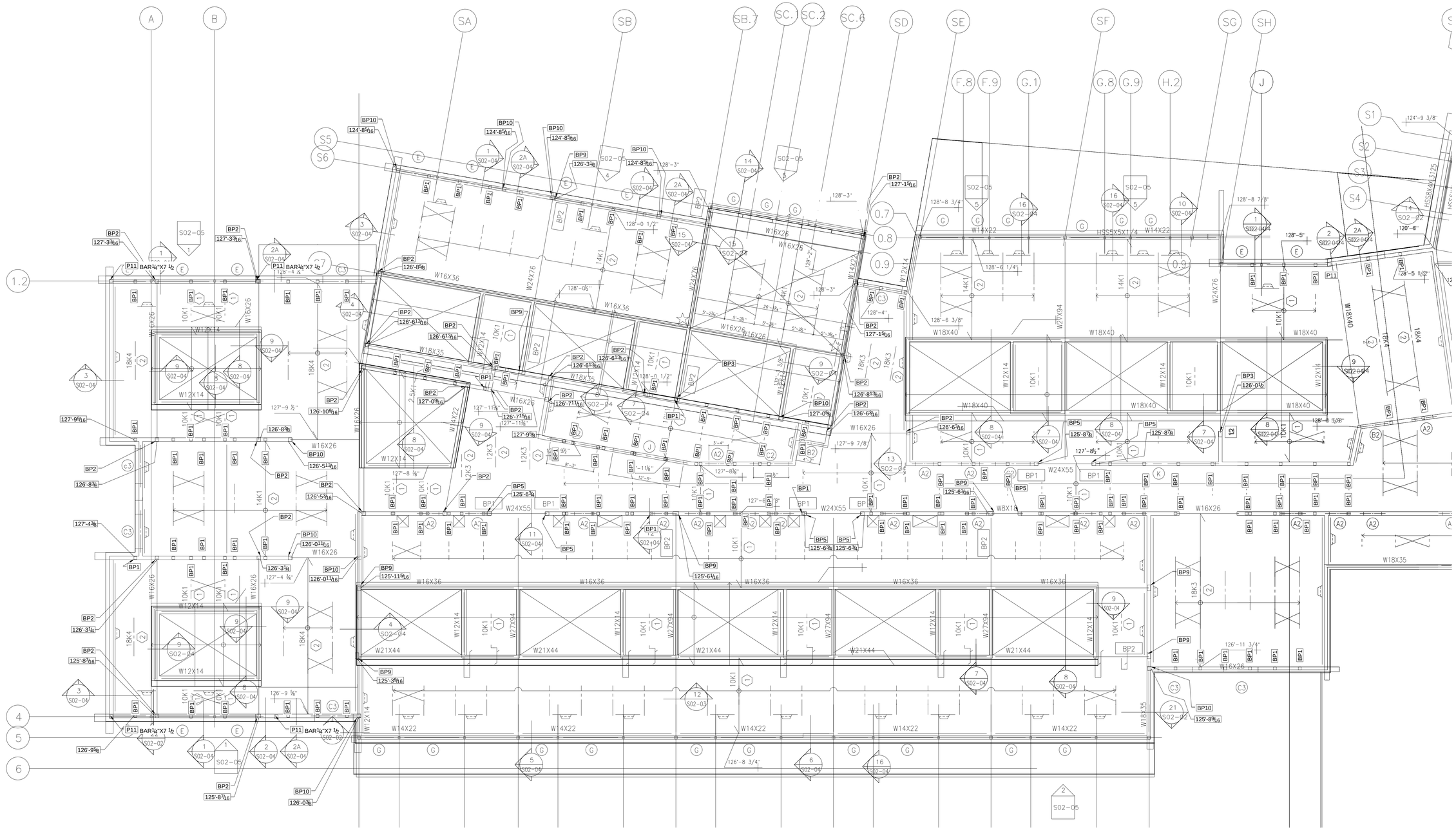
A
B
SA
SB
SB.7
SC.1
SC.2
SC.6
SD
SE
SF
SG
SH
F.8
F.9
G.1
G.8
G.9
H.2
J
S1
S2
S3
S4
S5
S6
1.2
0.7
0.8
0.9
4
5
6
W16X36
W24X76
W18X35
W16X26
W18X40
W14X22
W21X44
W24X55
W27X94
W12X14
W18X35
W8X18
W18X35
W18X40
W18X35
W18X40
W18X40
W18X40

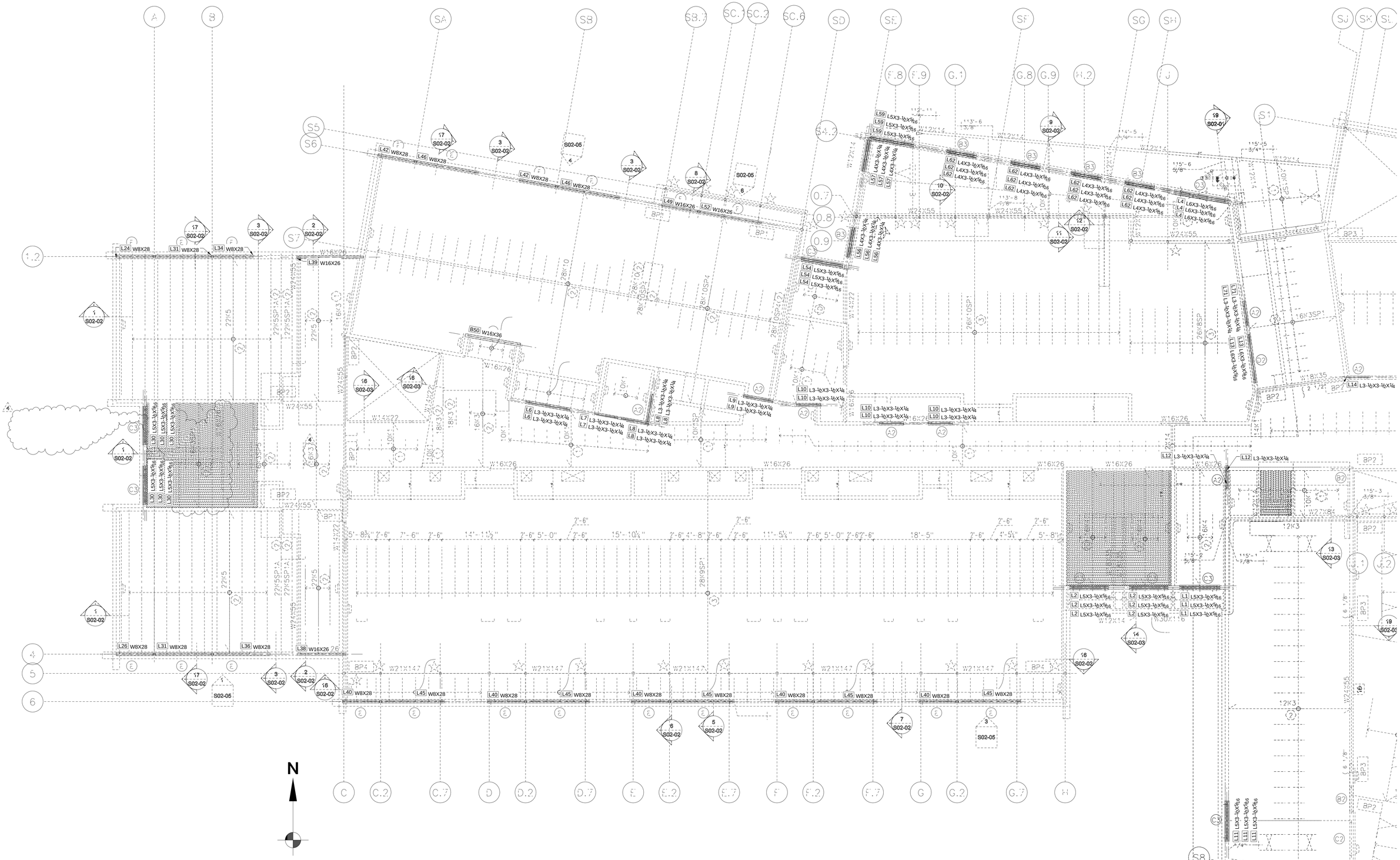

LINTELS - 1ST FLOOR

STEEL ASTM	A992	UNO	
ELECTRODES	E70XX L.H.	UNO	
WELDS	1/4" FILLET	UNO	
OPEN HOLES	13/16"	UNO	
BOLTS	3/4" A325N	UNO	
PAINT	1 S/C STD PRIMER U.N	UNO	

DATE	NO.	DESCRIPTION	BY
5/16/11	1	For Approval	TMc

PROJECT NAME: OLDE ORCHARD ELEMENTARY SCHOOL

LOCATION: 800 McNAUGHTEN RD. COLUMBUS, OHIO 43213

CONTRACTOR: THOMAS AND MARKER CONSTRUCTION

ARCHITECT: BRAUN & STEIDL

North Central Fabrication, Ltd.

NORTH CENTRAL FABRICATION
Mansfield, OH 44906
419-529-2744 FAX 419-529-5387 http://www.northcentralfabrication.com/

AISC CERTIFIED FABRICATOR

DESCRIPTION: LINTELS ~ 1ST LEVEL ~ AREA "A"

DATE: 05/16/2011

DRAWN BY: TMc

JOB No.: 70234

DRG No.: E3

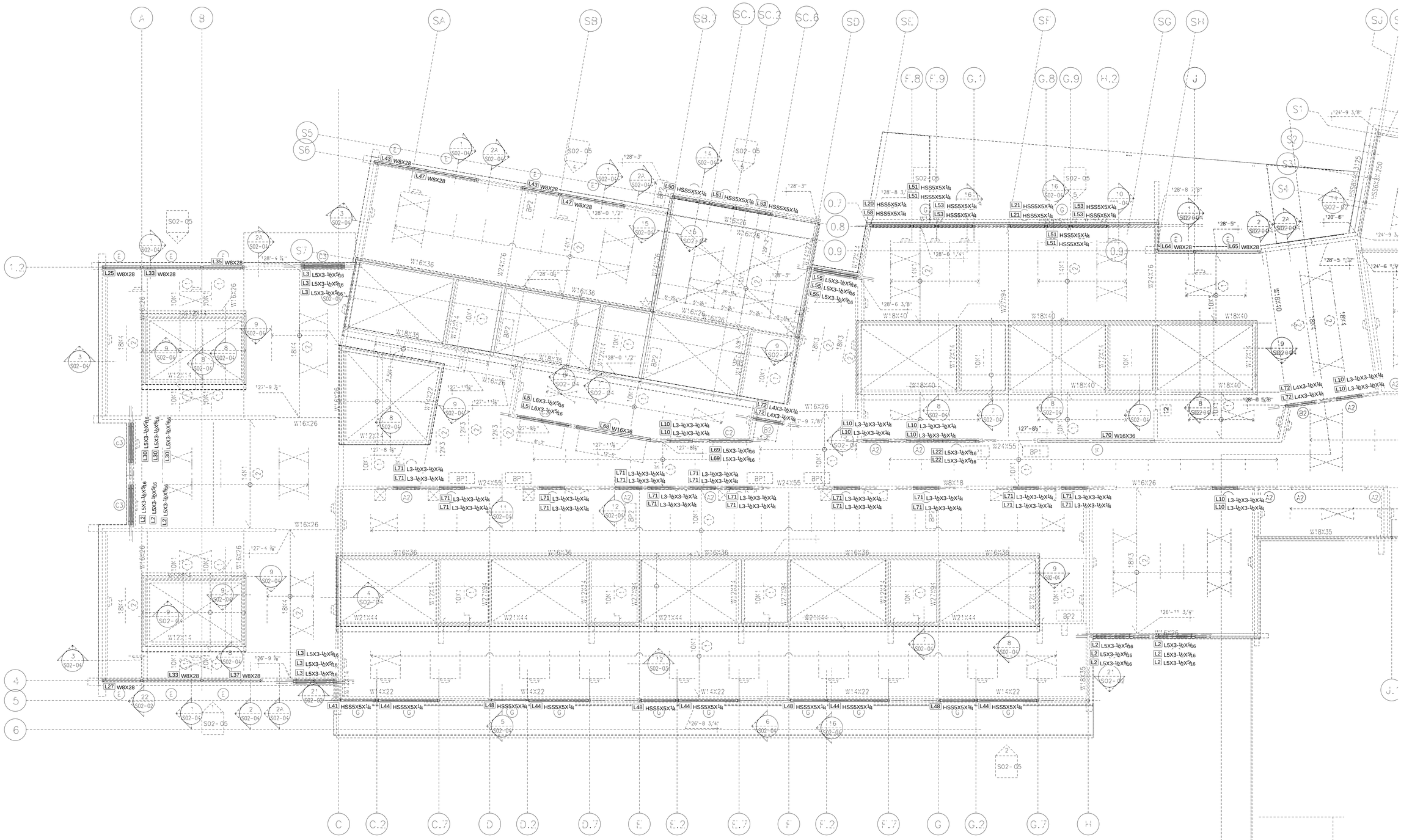

LINTELS - 2ND FLOOR

DATE	NO.	DESCRIPTION	BY
5/16/11	A	For Approval	TMc

STEEL ASTM	A992	UNO
ELECTRODES	E70XX L.H.	UNO
WELDS	1/4" FILLET	UNO
OPEN HOLES	13/16"	UNO
BOLTS	3/4" A325N	UNO
PAINT	1 S/C STD PRIMER U.N	UNO

PROJECT NAME: OLDE ORCHARD ELEMENTARY SCHOOL

LOCATION: 800 McNAUGHTEN RD. COLUMBUS, OHIO 43213

CONTRACTOR: THOMAS AND MARKER CONSTRUCTION

ARCHITECT: BRAUN & STEIDL

North Central Fabricators Ltd.
NORTH CENTRAL FABRICATION
Mansfield, OH 44906
419-529-2744 FAX 419-529-5387 http://www.northcentralfabrication.com/

AISC CERTIFIED FABRICATOR

DESCRIPTION: LINTELS ~ 2ND LEVEL ~ AREA "A"

DATE: 05/16/2011

DRAWN BY: TMc

JOB No. 70234

DRG No. E4

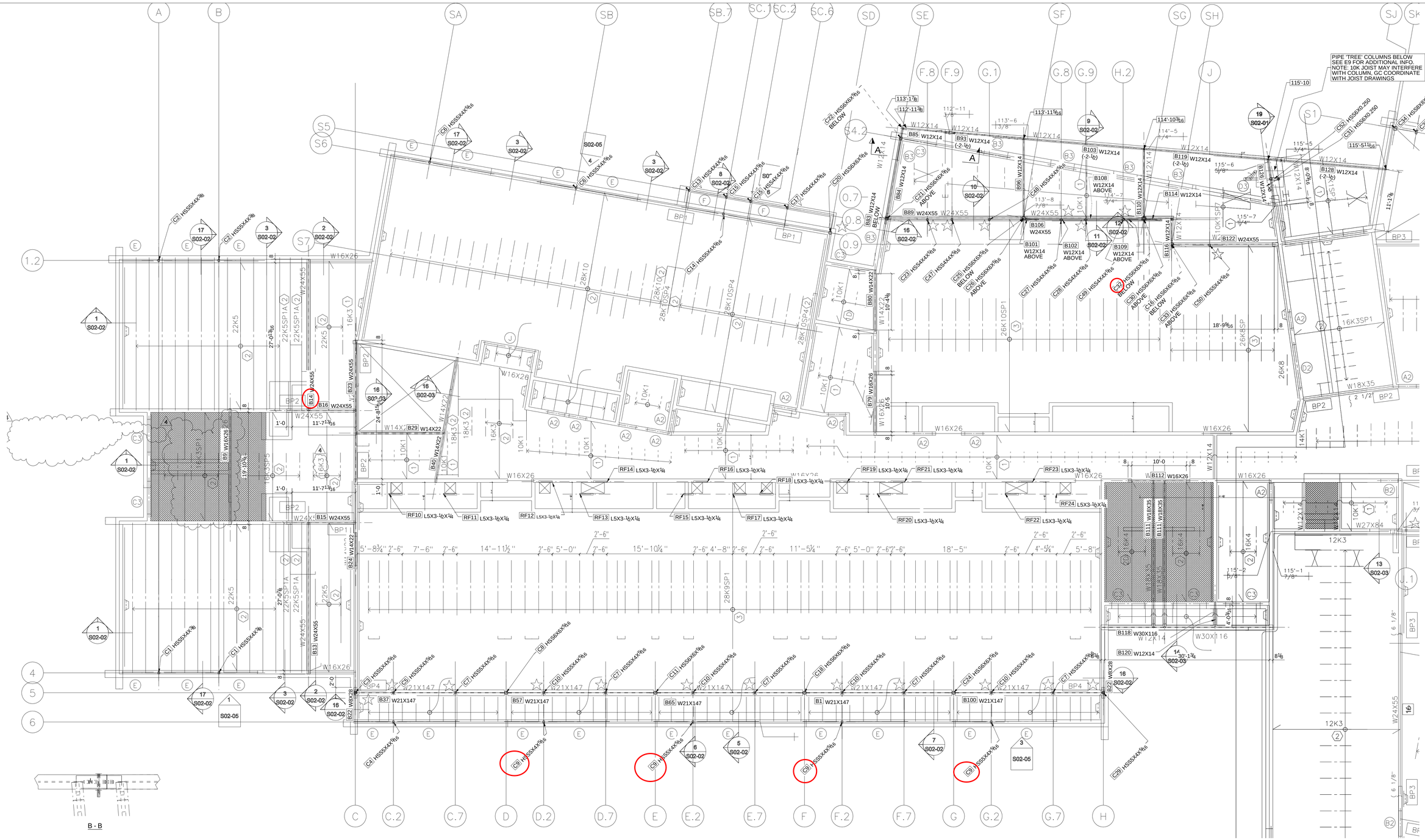

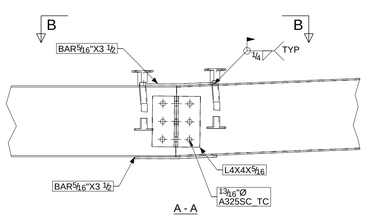

N

FRAMING ~ 2ND FLOOR ~ AREA 'A'

PLAN AT EL. 114'-0 (+/-)

TOP OF STEEL AND JOIST BEARING REFERENCE ELEVATION 113'-5½" EXCEPT AS NOTED THUS (±).

7) APPROVER / GC VERIFY ALL E PLAN SPAN DIMENSIONS PRIOR TO FAB.
6) WEEP HOLES FOR GALVANIZED MEMBERS PER GALVANIZERS SPECS.
5) NO PAINT WITHIN 3" OF OPEN HOLES FOR SC BOLTS.
4) ALL MATERIAL AS NOTED.
3) 1-1/4 " EDGE DISTANCE UNLESS NOTED (1-1/2" ON BASE PLATES U.N.).
2) GRIND ALL ROUGH EDGES SMOOTH
1) ALL WELDS 3/16" FILLETS OR BUTT WELDS, UNLESS NOTED, PROCEDURES PER AWS D.1.1 LATEST REV.

GENERAL NOTES:

MATERIAL NOTE:
W-SHAPES, CHANNELS: ASTM A992
ANGLES, S-SHAPES: ASTM A36
PLATE AND BAR: ASTM A36
PIPE: ASTM A53, GRADE B
HSS: ASTM A500, GRADE B

STEEL ASTM	A992	UNO
ELECTRODES	E70XX L.H.	UNO
WELDS	1/4" FILLET	UNO
OPEN HOLES	13/16"	UNO
BOLTS	3/4" A325N	UNO
PAINT	1 S/C STD PRIMER U.N	UNO

DATE	NO.	DESCRIPTION	BY
5/17/11	1	For Approval	TMc

PROJECT NAME: OLDE ORCHARD ELEMENTARY SCHOOL
LOCATION: 800 McNAUGHTEN RD. COLUMBUS, OHIO 43213
CONTRACTOR: THOMAS AND MARKER CONSTRUCTION
ARCHITECT: BRAUN & STEIDL

North Central Fabrication, Ltd.

NORTH CENTRAL FABRICATION
Mansfield, OH 44906
419-529-2744 FAX 419-529-5387 http://www.northcentralfabrication.com/

AISC CERTIFIED FABRICATOR

DESCRIPTION: FRAMING ~ 2ND LEVEL ~ AREA "A"
DATE: 05/09/2011
DRAWN BY: TMc
JOB No.: 70234
DRG No.: E5

7) APPROVER / GC VERIFY ALL E PLAN SPAN DIMENSIONS PRIOR TO FAB.
6) WEEP HOLES FOR GALVANIZED MEMBERS PER GALVANIZERS SPECS.
5) NO PAINT WITHIN 3" OF OPEN HOLES FOR SC BOLTS.
4) ALL MATERIAL AS NOTED.
3) 1-1/4 " EDGE DISTANCE UNLESS NOTED (1-1/2" ON BASE PLATES U.N.).
2) GRIND ALL ROUGH EDGES SMOOTH
1) ALL WELDS 3/16" FILLETS OR BUTT WELDS, UNLESS NOTED. PROCEDURES PER AWS D.1.1 LATEST REV.

GENERAL NOTES:

MATERIAL NOTE:
W-SHAPES, CHANNELS: ASTM A992
ANGLES, S-SHAPES: ASTM A36
PLATE AND BAR: ASTM A36
PIPE: ASTM A53, GRADE B
HSS: ASTM A500, GRADE B

FRAMING ~ ROOF LEVEL ~ AREA 'A'

PLAN AT EL. +126'-8-3/4 (+/-)

STEEL ASTM	A992	UNO
ELECTRODES	E70XX L.H.	UNO
WELDS	1/4" FILLET	UNO
OPEN HOLES	13/16"	UNO
BOLTS	3/4" A325N	UNO
PAINT	1 S/C STD PRIMER U.N	UNO

DATE	NO.	DESCRIPTION	BY
5/17/11	A	For Approval	TMc

PROJECT NAME: OLDE ORCHARD ELEMENTARY SCHOOL

LOCATION: 800 McNAUGHTEN RD. COLUMBUS, OHIO 43213

CONTRACTOR: THOMAS AND MARKER CONSTRUCTION

ARCHITECT: BRAUN & STEIDL

North Central Fabrication, Ltd.
STEEL FOOTBRIDGES, BRIDGES, ETC.

NORTH CENTRAL FABRICATION
Mansfield, OH 44906
419-529-2744 FAX 419-529-5387 http://www.northcentralfabrication.com/

AISC CERTIFIED FABRICATOR

DESCRIPTION: FRAMING ~ ROOF LEVEL ~ AREA "A"

DATE: 05/17/2011 | JOB No. 70234

DRAWN BY: TMc | DRG No. E6

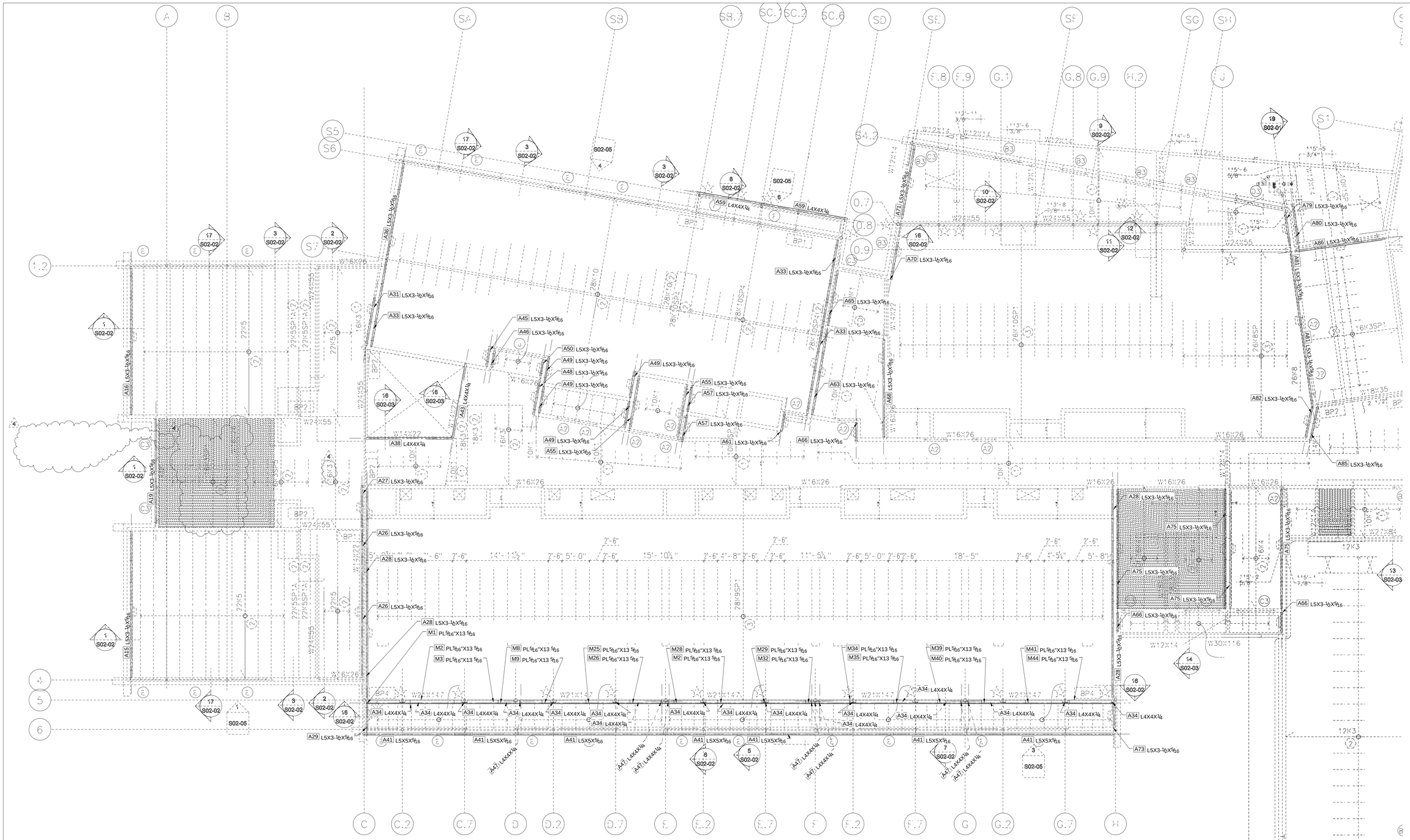

N

ANGLES ~ 1ST LEVEL ~ AREA "A"

(WORK WITH DRAWINGS E1 THRU E6 & E8 FOR ADDITIONAL INFORMATION, ALSO SEE E-S?-?? FOR SECTIONS)

STEEL ASTM	A992		UNO
ELECTRODES	E70XX L.H.		UNO
WELDS	1/4" FILLET		UNO
OPEN HOLES	13/16"		UNO
BOLTS	3/4" A325N		UNO
PAINT	1 S/C STD PRIMER U.N		UNO

DATE	NO.	DESCRIPTION	BY
5/16/11	A	For Approval	TMc

PROJECT NAME: OLDE ORCHARD ELEMENTARY SCHOOL

LOCATION: 800 McNAUGHTEN RD. COLUMBUS, OHIO 43213

CONTRACTOR: THOMAS AND MARKER CONSTRUCTION

ARCHITECT: BRAUN & STEIDL

North Central Fabrication, Ltd.

NORTH CENTRAL FABRICATION
Mansfield, OH 44906
419-529-2744 FAX 419-529-5387 http://www.northcentralfabrication.com/

CERTIFIED STEEL FABRICATOR

DESCRIPTION: ANGLES ~ 1ST LEVEL ~ AREA "A"

DATE: 05/18/2011

DRAWN BY: TMc

JOB No.: 70234

DRG No.: E7

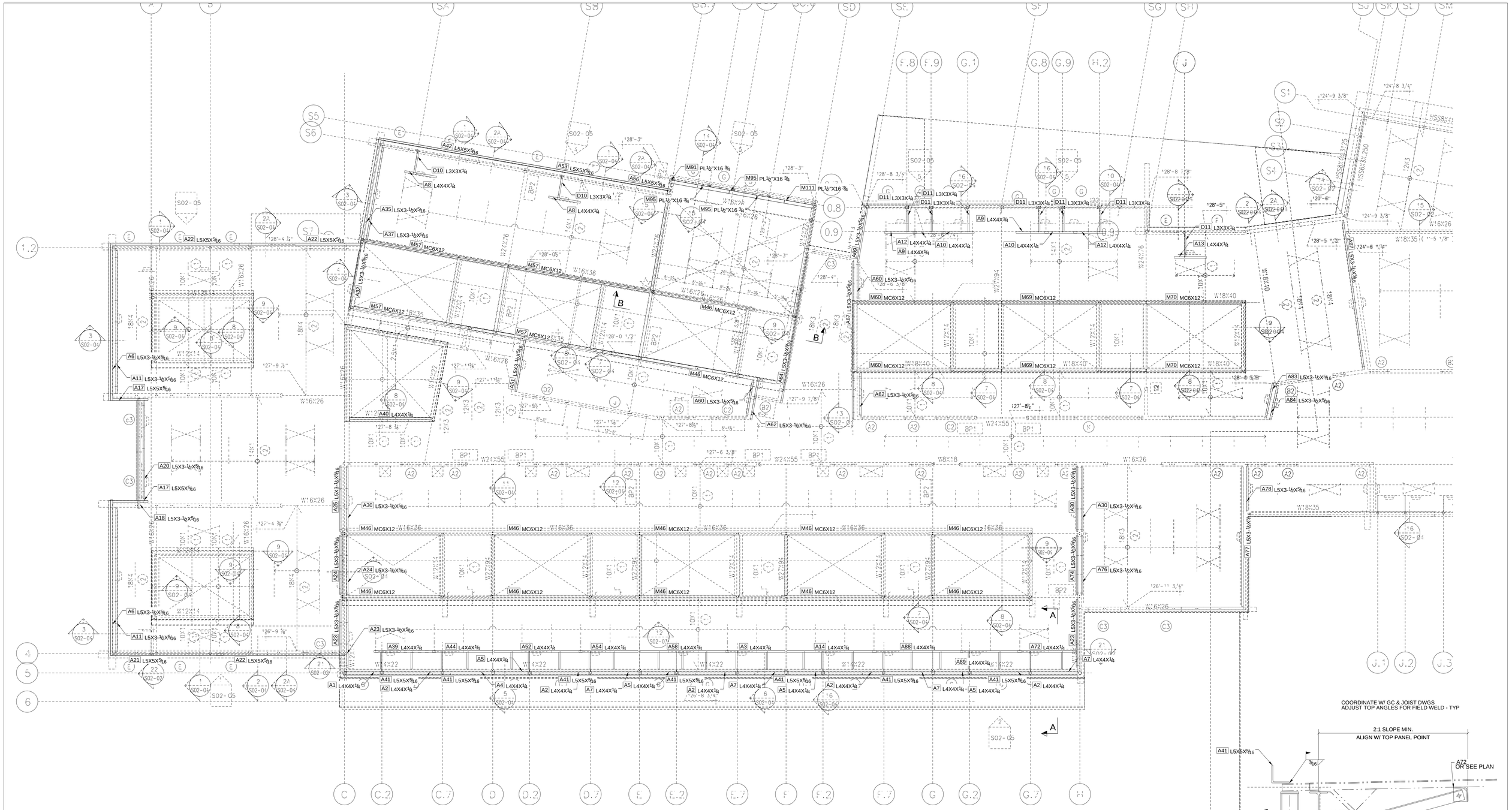

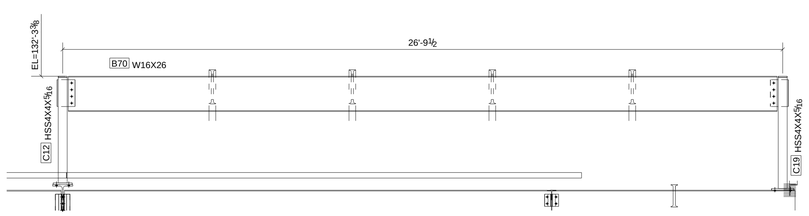

B - B
1:32

ANGLES ~ 2ND LEVEL ~ AREA "A"

(WORK WITH DRAWINGS E1 THRU E6 & E7 FOR ADDITIONAL INFORMATION, ALSO SEE E-S?-?? FOR SECTIONS)

COORDINATE W/ GC & JOIST DWGS
ADJUST TOP ANGLES FOR FIELD WELD - TYP

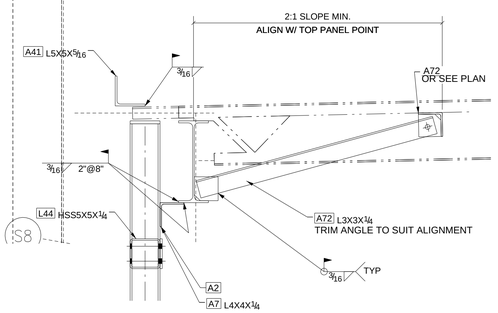

A - A

STEEL ASTM	A992	UNO	
ELECTRODES	E70XX L.H.	UNO	
WELDS	1/4" FILLET	UNO	
OPEN HOLES	13/16"	UNO	
BOLTS	3/4" A325N	UNO	
PAINT	1 S/C STD PRIMER U.N	UNO	

DATE	NO.	DESCRIPTION	BY
5/16/11	A	For Approval	TMc

PROJECT NAME: OLDE ORCHARD ELEMENTARY SCHOOL
LOCATION: 800 McNAUGHTEN RD. COLUMBUS, OHIO 43213
CONTRACTOR: THOMAS AND MARKER CONSTRUCTION
ARCHITECT: BRAUN & STEIDL

North Central Fabricators Ltd.

NORTH CENTRAL FABRICATION
Mansfield, OH 44906
419-529-2744 FAX 419-529-5387 http://www.northcentralfabrication.com/

AISC CERTIFIED FABRICATOR

DESCRIPTION: ANGLES ~ 2ND LEVEL ~ AREA "A"
DATE: 05/18/2011
DRAWN BY: TMc
JOB No.: 70234
DRG No.: E8

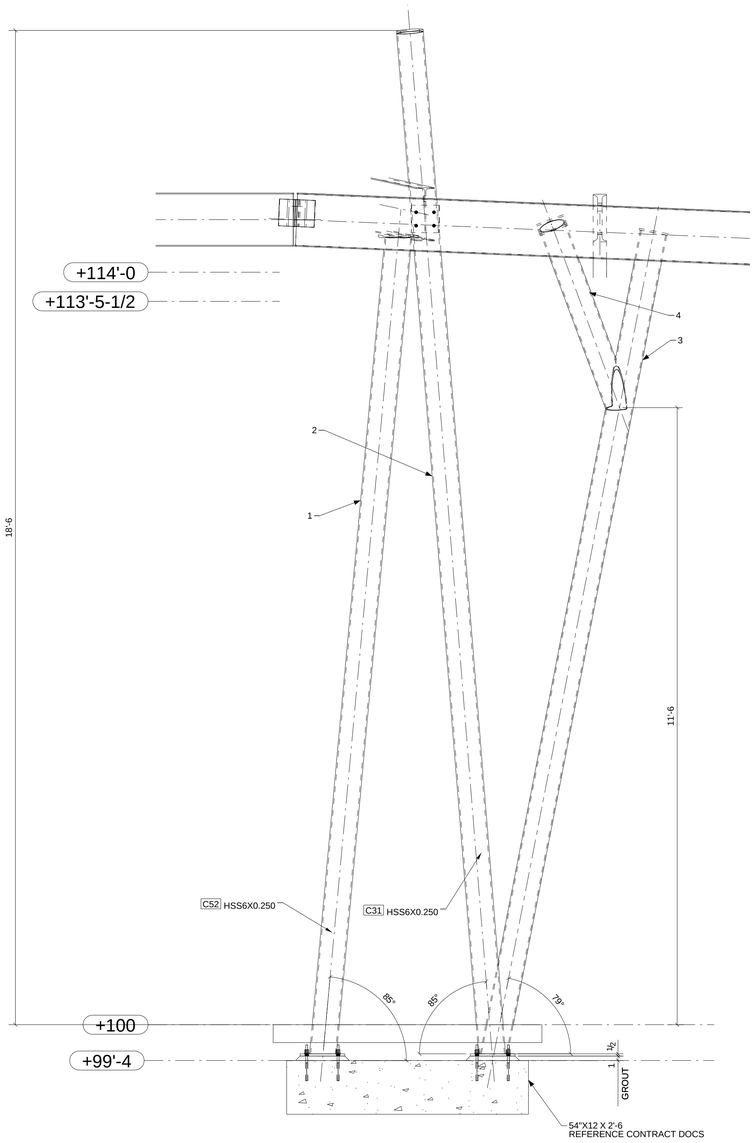

NORTH ELEVATION ~ TREE COLUMN
1:16

NOTE:
COLUMN ASSEMBLIES ARE HOT DIP GALVANIZED AND PAINTED, ARCH/GC/FAB PLEASE INDICATE SURFACE TREATMENT / FINISH SPECS FOR COLUMNS

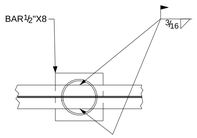

B - B

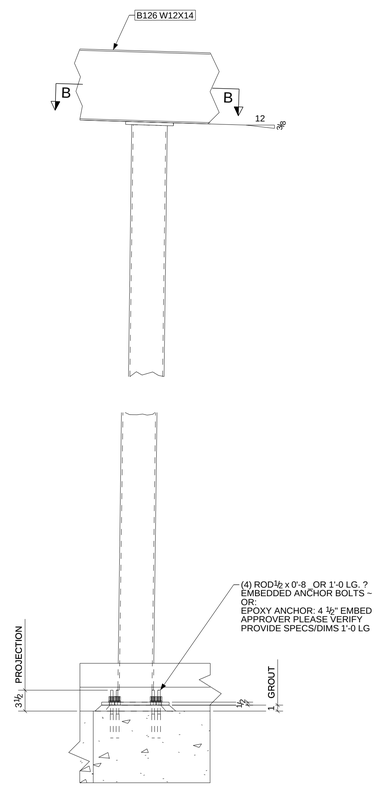

A - A

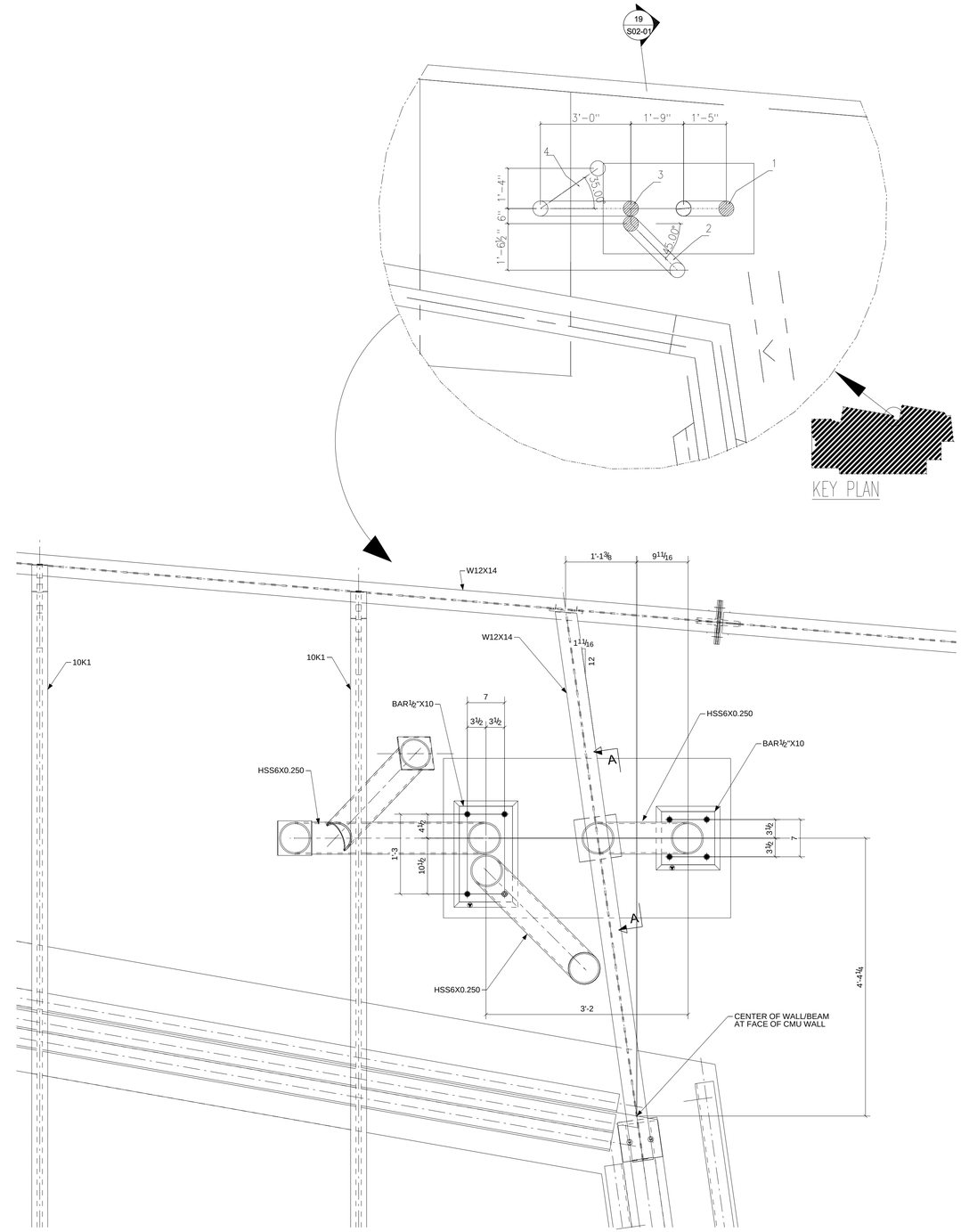

ENLARGED PLAN @ COLUMN TREE
1:12

STEEL ASTM	A992	UNO
ELECTRODES	E70XX L.H.	UNO
WELDS	1/4" FILLET	UNO
OPEN HOLES	13/16"	UNO
BOLTS	3/4" A325N	UNO
PAINT	1 S/C STD PRIMER U.N	UNO

DATE	NO.	DESCRIPTION	BY
5/21/11	1	For Approval	TMc

PROJECT NAME: OLDE ORCHARD ELEMENTARY SCHOOL
LOCATION: 800 McNAUGHTEN RD. COLUMBUS, OHIO 43213
CONTRACTOR: THOMAS AND MARKER CONSTRUCTION
ARCHITECT: BRAUN & STEIDL

North Central Fabrication, Ltd.
419-529-2744 FAX 419-529-5387 http://www.northcentralfabrication.com/

NORTH CENTRAL FABRICATION
Mansfield, OH 44906

AISC CERTIFIED FABRICATOR

DESCRIPTION: ORNAMENTAL TREE COLUMN
DATE: 05/20/2011
DRAWN BY: TMc
JOB No.: 70234
DRG No.: E9

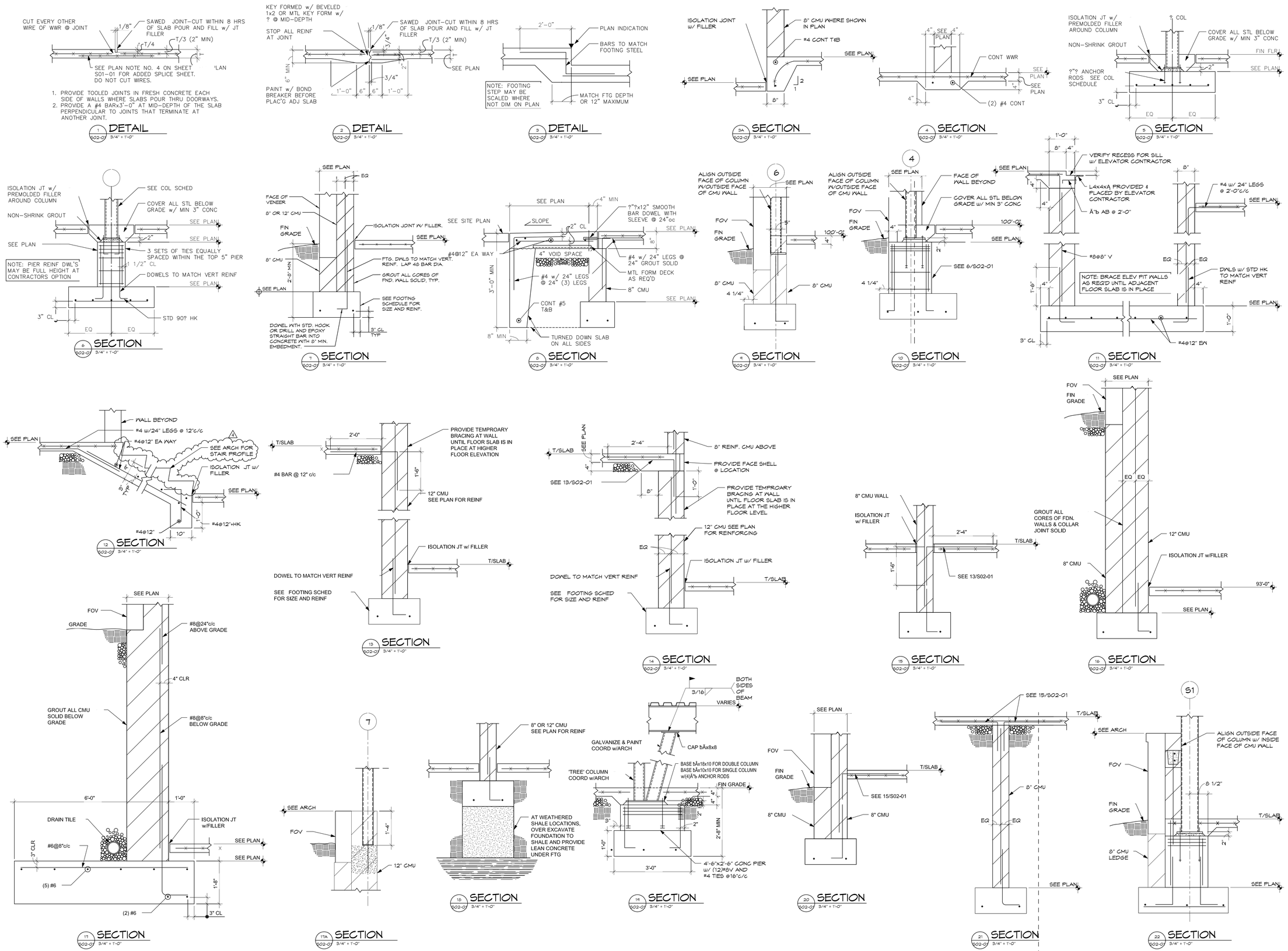

NO.	DATE	DESCRIPTION	BY

NORTH CENTRAL FABRICATION
Mansfield, OH 44906
419-522-2704 FAX 419-526-5307 http://www.northcentralfab

JOB No.	70234
DRG No.	E02-01
DATE	5/18/11
CHECKED BY	TE
DRAWN BY	TFH

DESCRIPTION: SECTIONS

PROJECT NAME: OLDE ORCHARD ELEMENTARY SCHOOL
LOCATION: 800 McNAUGHTEN RD. COLUMBUS, OHIO 43213
CONTRACTOR: THOMAS & MARKER CONSTRUCTION
ARCHITECT: BRAUN & STEIDL

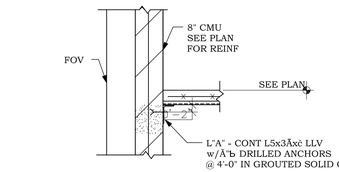

1 SECTION
S02-02 3/4" = 1'-0"

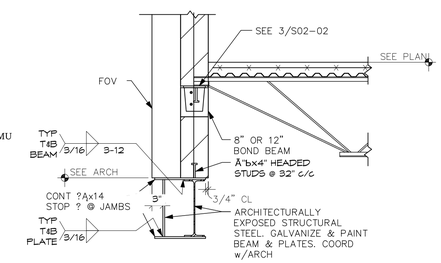

2 SECTION
S02-02 3/4" = 1'-0"

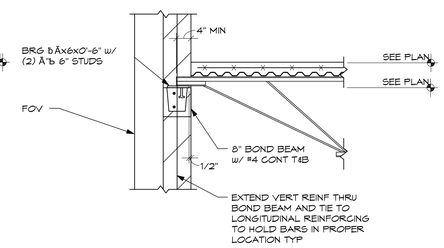

3 SECTION
S02-02 3/4" = 1'-0"

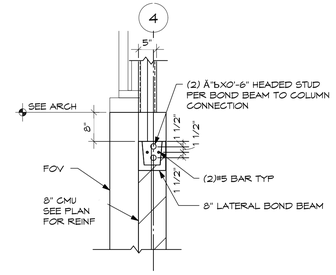

4 SECTION
S02-02 3/4" = 1'-0"

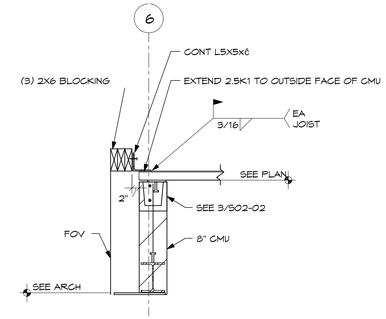

5 SECTION
S02-02 3/4" = 1'-0"

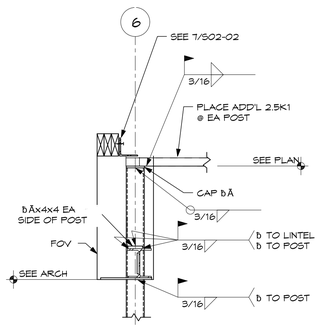

6 SECTION
S02-02 3/4" = 1'-0"

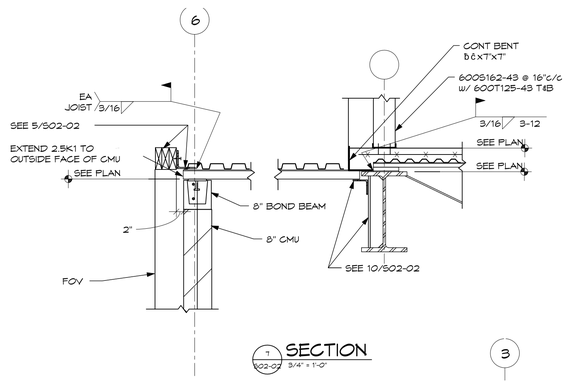

7 SECTION
S02-02 3/4" = 1'-0"

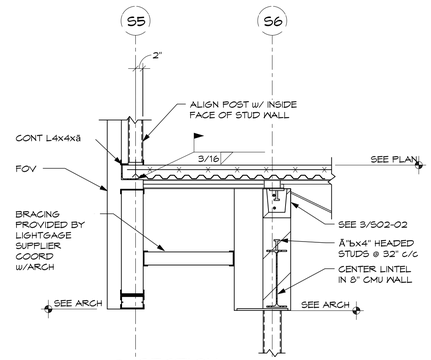

8 SECTION
S02-02 3/4" = 1'-0"

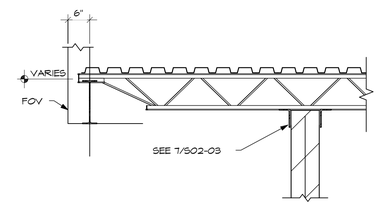

9 SECTION
S02-02 3/4" = 1'-0"

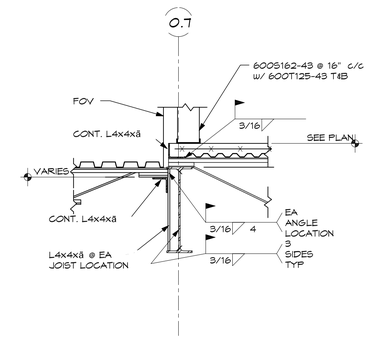

10 SECTION
S02-02 3/4" = 1'-0"

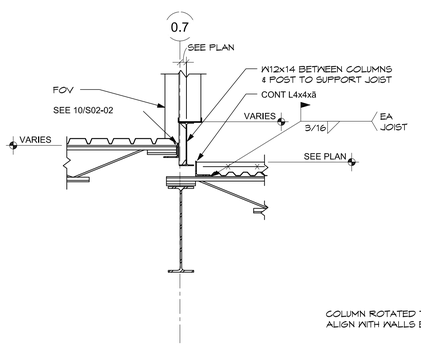

11 SECTION
S02-02 3/4" = 1'-0"

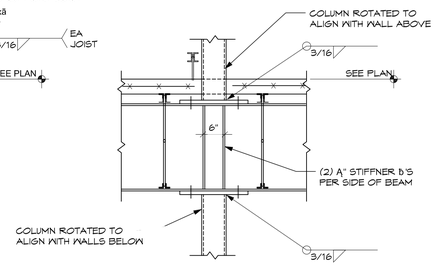

12 SECTION
S02-02 3/4" = 1'-0"

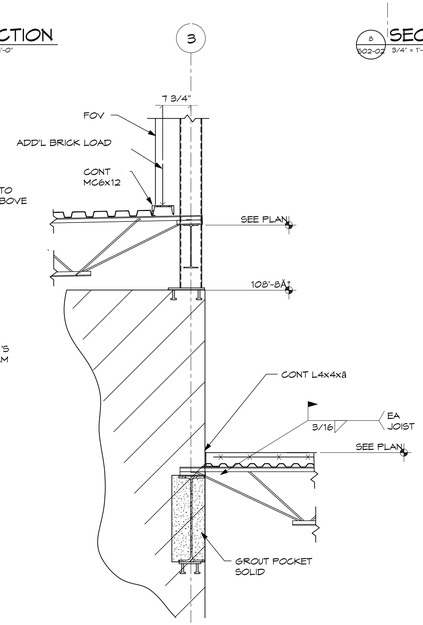

13 SECTION
S02-02 3/4" = 1'-0"

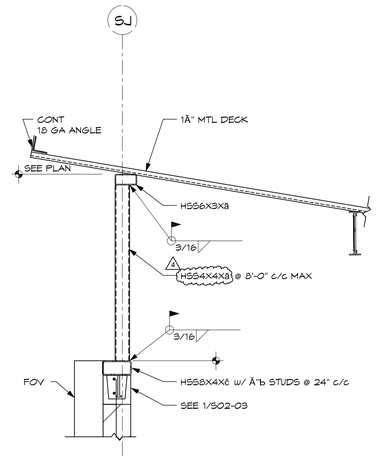

14 SECTION
S02-02 3/4" = 1'-0"

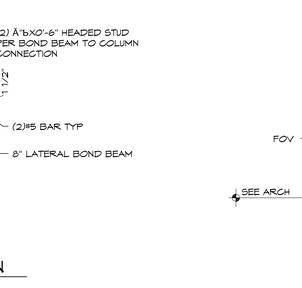

15 SECTION
S02-02 3/4" = 1'-0"

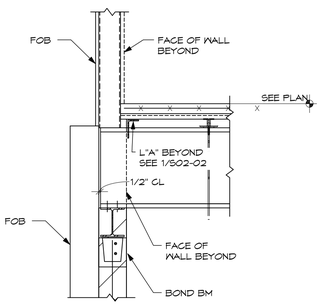

16 SECTION
S02-02 3/4" = 1'-0"

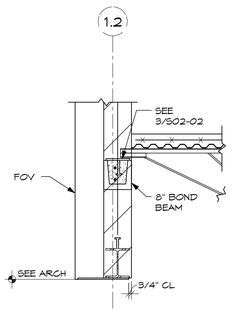

17 SECTION
S02-02 3/4" = 1'-0"

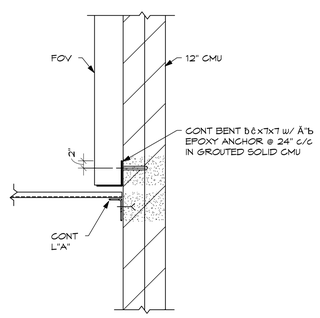

18 SECTION
S02-02 3/4" = 1'-0"

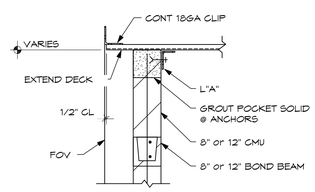

19 SECTION
S02-02 3/4" = 1'-0"

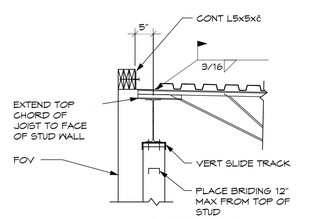

20 SECTION
S02-02 3/4" = 1'-0"

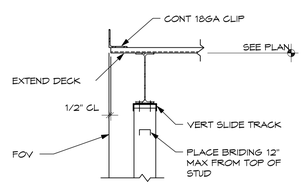

21 SECTION
S02-02 3/4" = 1'-0"

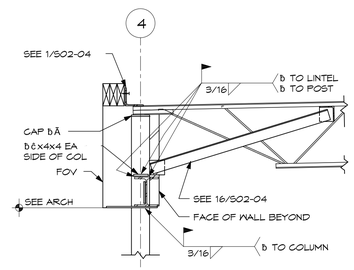

22 SECTION
S02-02 3/4" = 1'-0"

NO.	DATE	DESCRIPTION	BY

CERTIFIED FABRICATOR

JOB No. 70234
DRG No. E02-02

NORTH CENTRAL FABRICATION
Mansfield, OH 44906
419-524-2744 FAX: 419-526-5387 http://www.northcentralfab

DATE 5/18/11
CHECKED BY TE
DRAWN BY TFH

DESCRIPTION SECTIONS

PROJECT NAME OLDE ORCHARD ELEMENTARY SCHOOL
LOCATION 800 McNAUGHTEN RD. COLUMBUS, OHIO 43213
CONTRACTOR THOMAS & MARKER CONSTRUCTION
ARCHITECT BRAUN & STEIDL

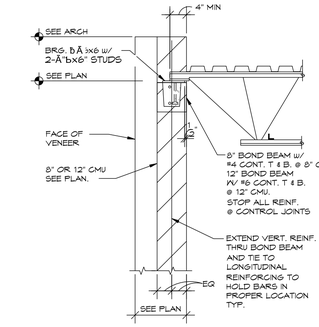

1 SECTION 202-03 3/4" = 1'-0"

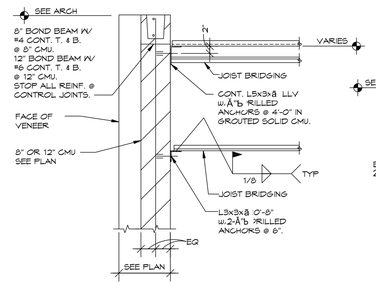

2 SECTION 202-03 3/4" = 1'-0"

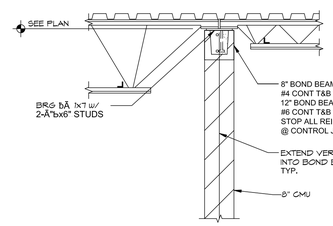

3 SECTION 202-03 3/4" = 1'-0"

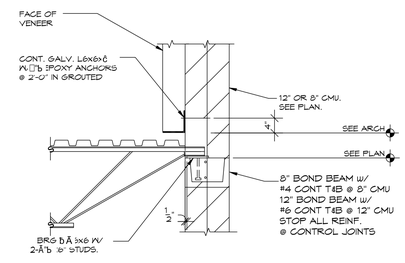

4 SECTION 202-03 3/4" = 1'-0"

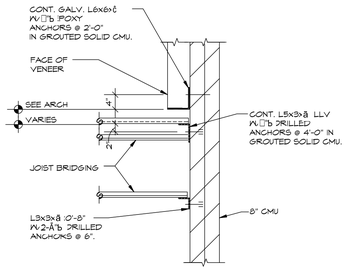

5 SECTION 202-03 3/4" = 1'-0"

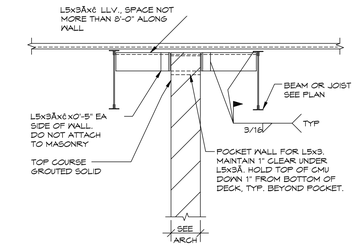

LATERAL SUPPORT OF FULL HEIGHT NON-LOAD BEARING MASONRY PARTITIONS PARALLEL TO JOISTS.

6 SECTION 202-03 3/4" = 1'-0"

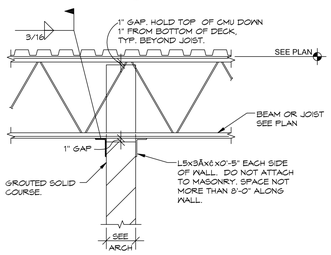

LATERAL SUPPORT OF FULL HEIGHT NON-LOAD BEARING MASONRY PARTITIONS PERPENDICULAR TO JOISTS.

7 SECTION 202-03 3/4" = 1'-0"

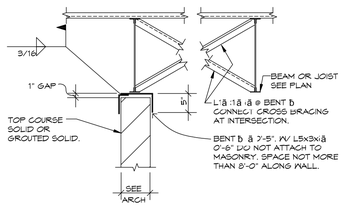

LATERAL SUPPORT OF FULL HEIGHT NON-LOAD BEARING MASONRY PARTITIONS PARALLEL TO AND UNDER A JOIST OR BEAM.

8 SECTION 202-03 3/4" = 1'-0"

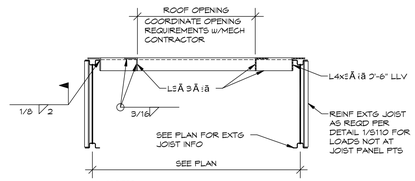

NOTES:
1. SEE MECHANICAL DRAWING FOR LOCATIONS, SIZES, AND QUANTITES OF ROOF OPENINGS.
2. ALL WELDING TO JOIST TO BE DONE WITH CARE SO AS NOT TO IMPAIR THE STRENGTH OF THE JOIST.

TYP ROOF OPENING

9 SECTION 202-03 3/4" = 1'-0"

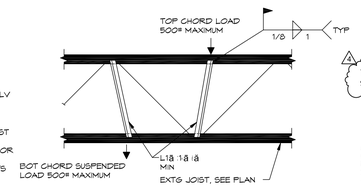

NOTES:
CONCENTRATED MECH UNIT LOADS, FOLDING PARTITIONS, SUSPENDED LOADS, ETC. SHOULD BE LOCATED AT JOIST PANEL POINTS WHERE POSSIBLE. WHEN PANEL POINT IS NOT ACCESIBLE, SUPPORT LOAD AS SHOWN. ALL WELDING TO JOIST IS TO BE DONE WITH CARE AS NOT TO IMPAIR THE STRENGTH OF THE JOIST.

TYP SUPPORT OF CONCENTRATED LOADS NOT AT JOIST PANEL POINT

10 SECTION 202-03 3/4" = 1'-0"

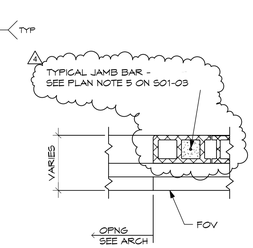

11 DETAIL 202-03 3/4" = 1'-0"

TYP WALL REINF @ ALL DOOR & WINDOW JAMBS

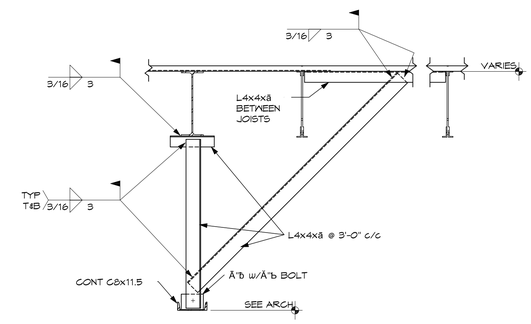

12 SECTION 202-03 3/4" = 1'-0"

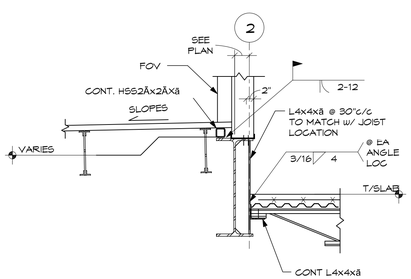

13 SECTION 202-03 3/4" = 1'-0"

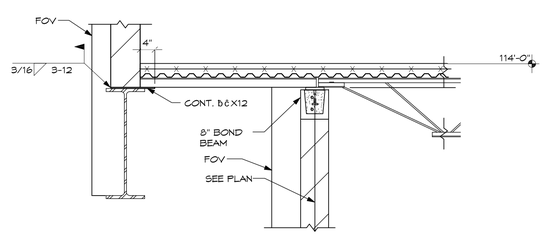

14 SECTION 202-03 3/4" = 1'-0"

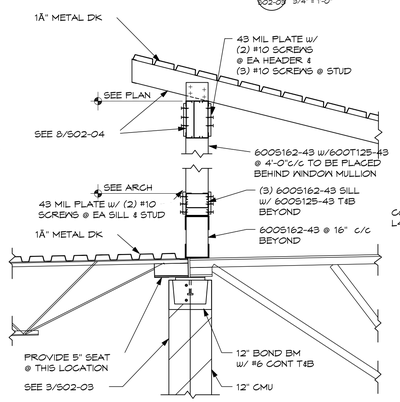

15 SECTION 202-03 3/4" = 1'-0"

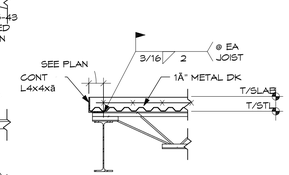

16 SECTION 202-03 3/4" = 1'-0"

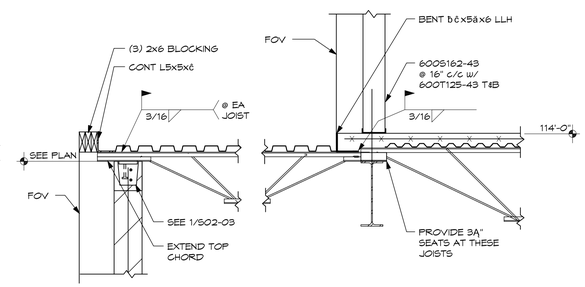

17 SECTION 202-03 3/4" = 1'-0"

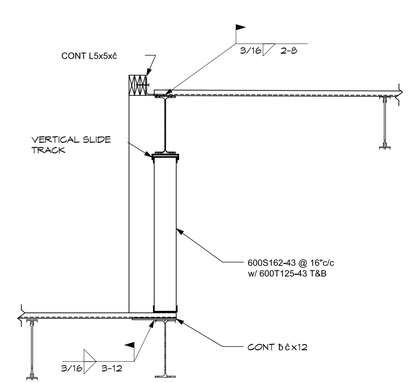

18 SECTION 202-03 3/4" = 1'-0"

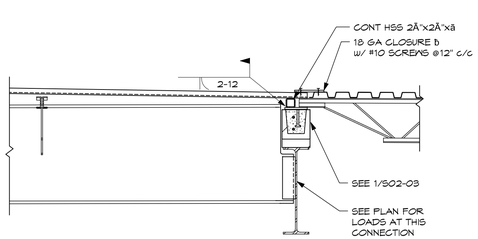

19 SECTION 202-03 3/4" = 1'-0"

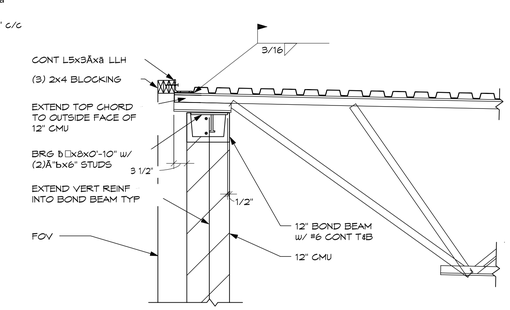

20 SECTION 202-03 3/4" = 1'-0"

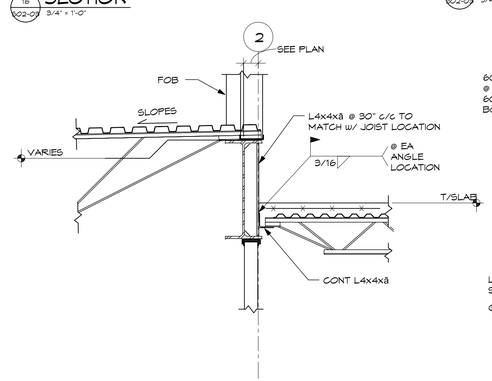

21 SECTION 202-03 3/4" = 1'-0"

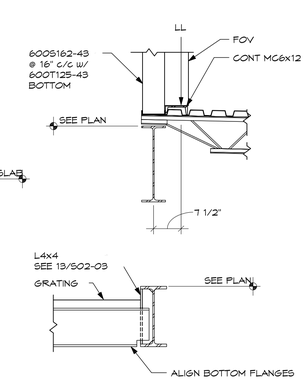

22 SECTION 202-03 3/4" = 1'-0"

NO.	DATE	DESCRIPTION	BY

CERTIFIED FABRICATOR

NORTH CENTRAL FABRICATION
Mansfield, OH 44906
419-526-2744 FAX 419-526-3387 http://www.northcentralfab.com

JOB No. 70234
DRG No. E02-03
DATE 5/18/11
CHECKED BY TE
DRAWN BY TFH
DESCRIPTION SECTIONS

PROJECT NAME OLDE ORCHARD ELEMENTARY SCHOOL
LOCATION 800 McNAUGHTEN RD. COLUMBUS, OHIO 43213
CONTRACTOR THOMAS & MARKER CONSTRUCTION
ARCHITECT BRAUN & STEIDL

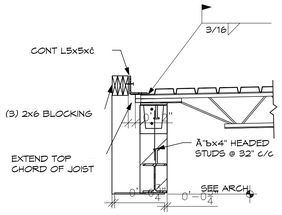

1 SECTION
E02-04 3/4" = 1'-0"

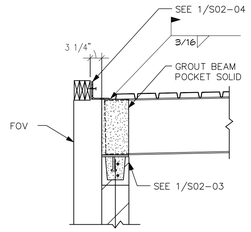

2 SECTION
E02-04 3/4" = 1'-0"

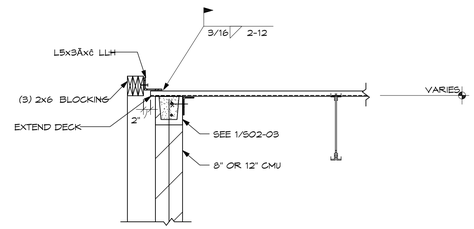

3 SECTION
E02-04 3/4" = 1'-0"

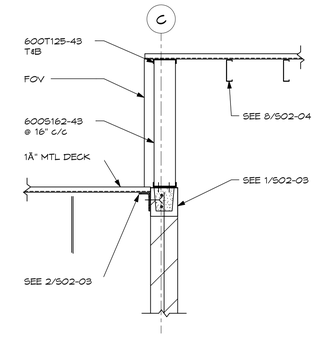

4 SECTION
E02-04 3/4" = 1'-0"

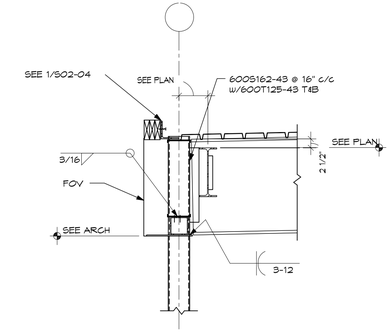

5 SECTION
E02-04 3/4" = 1'-0"

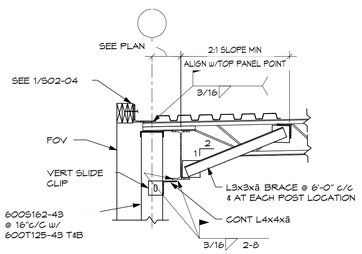

6 SECTION
E02-04 3/4" = 1'-0"

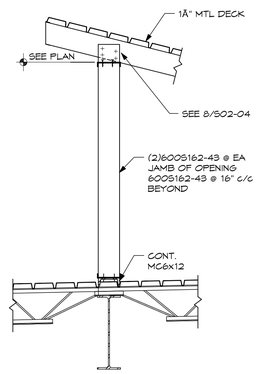

7 SECTION
E02-04 3/4" = 1'-0"

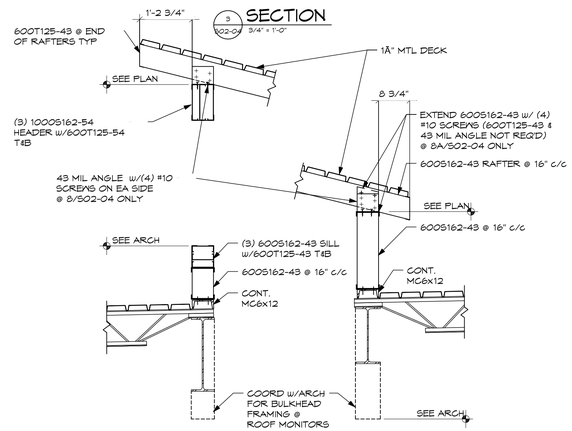

8A 8 SECTION
E02-04 E02-04 3/4" = 1'-0"

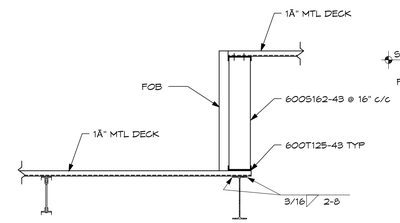

9 SECTION
E02-04 3/4" = 1'-0"

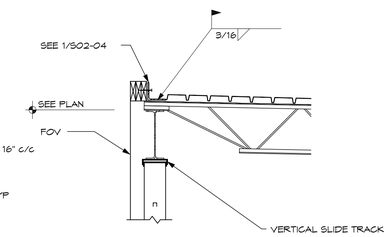

10 SECTION
E02-04 3/4" = 1'-0"

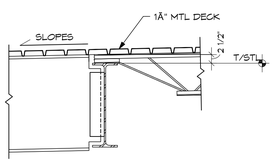

11 SECTION
E02-04 3/4" = 1'-0"

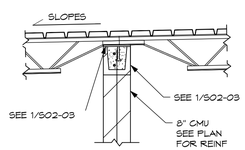

12 SECTION
E02-04 3/4" = 1'-0"

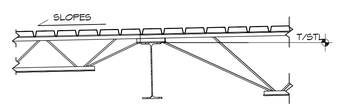

13 SECTION
E02-04 3/4" = 1'-0"

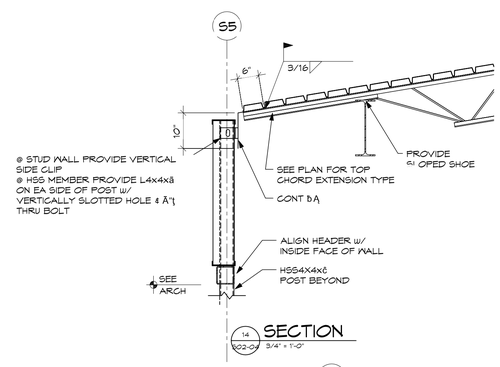

14 SECTION
E02-04 3/4" = 1'-0"

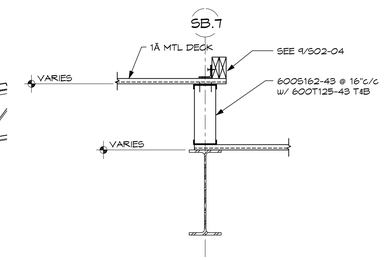

15 SECTION
E02-04 3/4" = 1'-0"

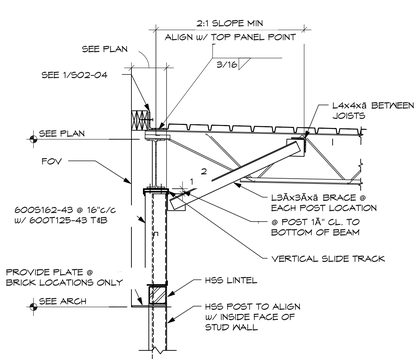

16 SECTION
E02-04 3/4" = 1'-0"

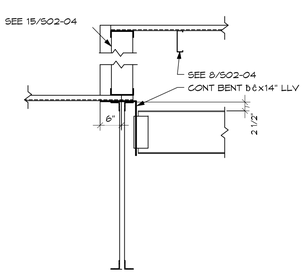

17 SECTION
E02-04 3/4" = 1'-0"

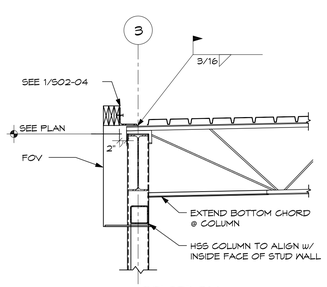

18 SECTION
E02-04 3/4" = 1'-0"

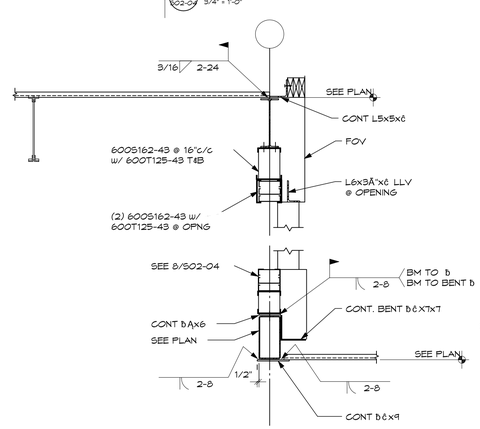

19 SECTION
E02-04 3/4" = 1'-0"

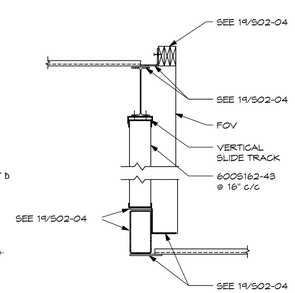

20 SECTION
E02-04 3/4" = 1'-0"

NO.	DATE	DESCRIPTION	BY

CERTIFIED FABRICATOR

NORTH CENTRAL FABRICATION
Mansfield, OH 44906
419.526.2744 FAX 419.526.5337 http://www.northcentralfab

JOB No.	70234
DRG No.	E02-04
DATE	5/18/11
CHECKED BY	TE
DRAWN BY	TFH
DESCRIPTION	SECTIONS

PROJECT NAME: OLDE ORCHARD ELEMENTARY SCHOOL
LOCATION: 800 McNAUGHTEN RD. COLUMBUS, OHIO 43213
CONTRACTOR: THOMAS & MARKER CONSTRUCTION
ARCHITECT: BRAUN & STEIDL

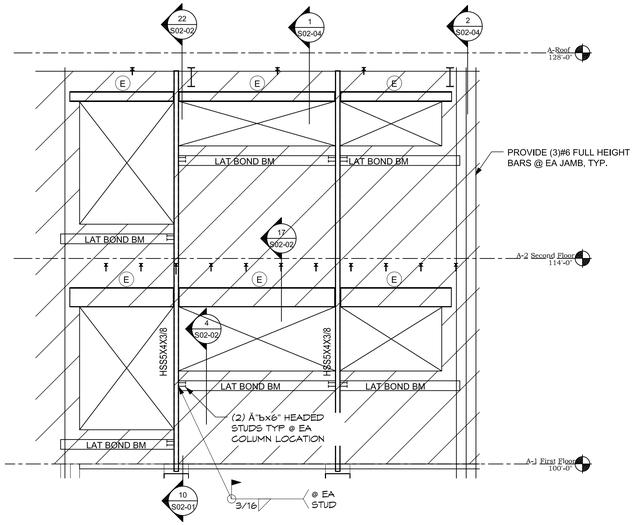

1 S02-09 ELEVATION 1/4" = 1'-0"

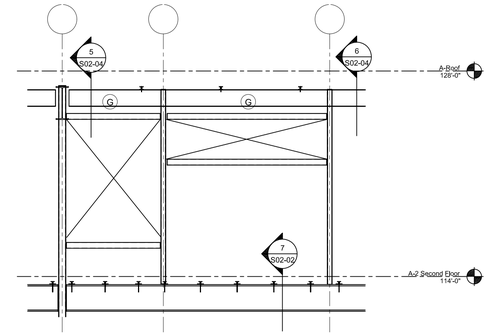

2 S02-09 ELEVATION 1/4" = 1'-0"

TYP @ 5 LOCATIONS ON COLUMN LINE 5

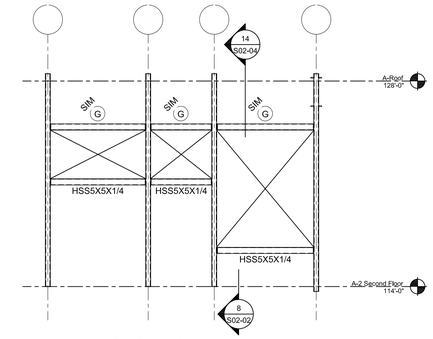

5 S02-09 ELEVATION 1/4" = 1'-0"

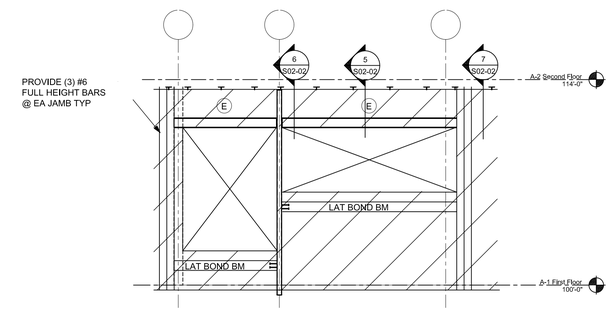

3 S02-09 ELEVATION 1/4" = 1'-0"

TYP @ 5 LOCATIONS ON COLUMN LINE 6

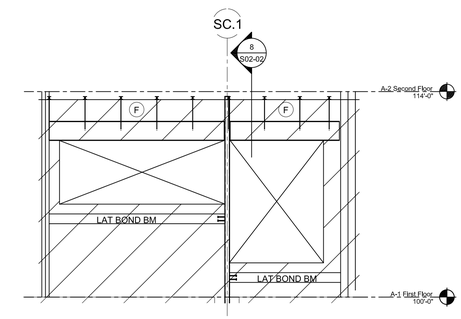

6 S02-09 ELEVATION 1/4" = 1'-0"

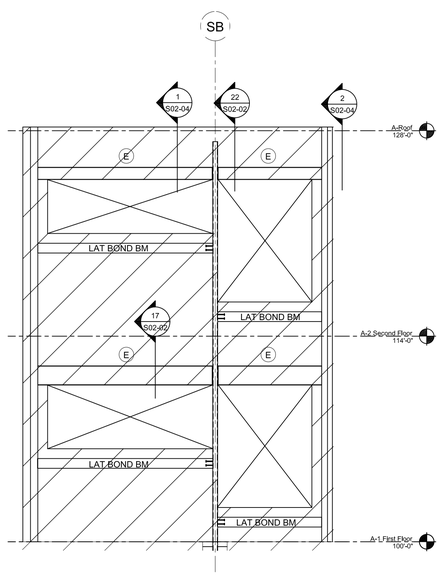

4 S02-09 ELEVATION 1/4" = 1'-0"

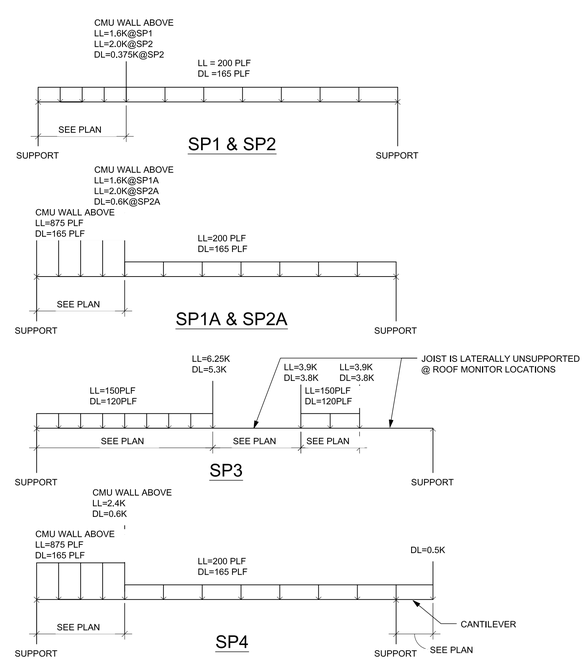

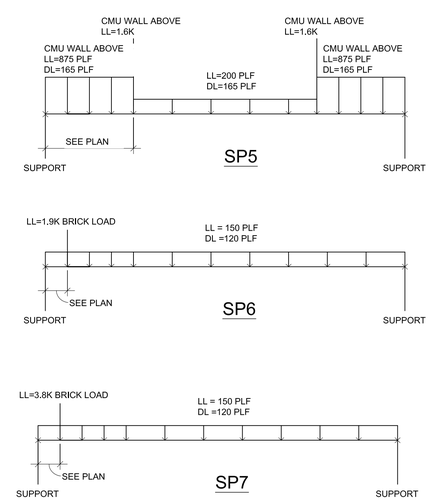

JOIST LOADING DIAGRAMS

1/8" = 1'-0"

NO.	DATE	DESCRIPTION	BY

CERTIFIED FABRICATOR

NORTH CENTRAL FABRICATION
Mansfield, OH 44906
419-526-2744 FAX 419-526-5307 http://www.northcentralfab

JOB No.	70234
DRG No.	E02-05
DATE	
CHECKED BY	TE
DATE	5/18/11
DRAWN BY	TFH
DESCRIPTION	SECTIONS

PROJECT NAME: OLDE ORCHARD ELEMENTARY SCHOOL

LOCATION: 800 McNAUGHTEN RD. COLUMBUS, OHIO 43213

CONTRACTOR: THOMAS & MARKER CONSTRUCTION

ARCHITECT: BRAUN & STEIDL

PHASE				
1	2	3	4	5
79	43	0	0	0

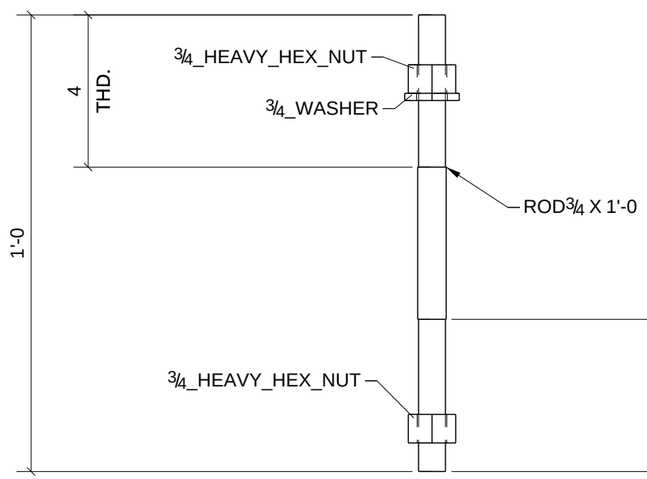

PROCESS CONTROL
PROCESS BY
FAB: _____
FIT AND WELD: _____
INSPECTION: _____
OTHER (IF NEEDED) _____
_____ : _____
_____ : _____
_____ : _____
_____ : _____
REFERENCE LATEST ERECTION DRAWINGS FOR MATERIAL & FABRICATION INFORMATION

122 - ANCHORRODS - AB1

BILL OF MATERIAL

Qty Ea.	Qty Tot	Piece Mark	Description	Length	Weight Total	Remarks	Adv Mill #	Steel Grade
	122	AB1	ANCHORRODS					
	122		ROD3/4"	1'-0"	153	SQ-2		A992
	122		3/4_WASHER		7			
	244		3/4_HEAVY_HEX_NUT		46			

STEEL ASTM	A992		UNO
ELECTRODES	E70XX L.H.		UNO
WELDS	1/4" FILLET		UNO
OPEN HOLES	13/16" UNO	FINISH	PER SPECS
BOLTS	3/4" A325N		UNO
PAINT	1 S/C STD PRIMER U.N.O.		UNO

PROJECT NAME
OLDE ORCHARD ELEMENTARY SCHOOL

LOCATION
800 McNAUGHTEN RD. COLUMBUS, OHIO 43213

CONTRACTOR
THOMAS AND MARKER CONSTRUCTION

ARCHITECT
BRAUN & STEIDL

DATE	NO.	DESCRIPTION	BY
5/28/11	B	For Checking	TMc
4/18/11	A	For Approval	TMc

North Central Fabrication, Ltd.

NORTH CENTRAL FABRICATION
Mansfield, OH 44906
419-529-2744 FAX 419-529-5387 http://www.northcentralfab

AISC CERTIFIED FABRICATOR

DESCRIPTION	DATE	DATE	JOB No.
ANCHOR BOLT	04/18/2011		70234
	DRAWN BY	CHECKED BY	DRG No. AB1

PHASE				
1	2	3	4	5
1	0	0	0	0

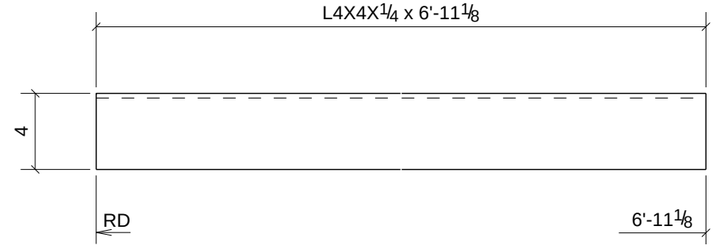

PROCESS CONTROL
PROCESS BY
FAB: _____
FIT AND WELD: _____
INSPECTION: _____
OTHER (IF NEEDED) _____
_____ : _____
_____ : _____
_____ : _____
_____ : _____
_____ : _____
REFERENCE LATEST ERECTION DRAWINGS FOR MATERIAL & FABRICATION INFORMATION

ONE - ANGLE - A1

DATE	NO.	DESCRIPTION	BY
5/28/11	B	For Checking	TMc
5/16/11	A	For Approval	TMc

BILL OF MATERIAL

Qty Ea.	Qty Tot	Piece Mark	Description	Length	Weight Total	Remarks	Adv Mill #	Steel Grade
	1	A1	ANGLE					
	1		L4X4X1/4	6'-11 1/8"	46	SQ-2		A36

STEEL ASTM	A992	UNO
ELECTRODES	E70XX L.H.	UNO
WELDS	1/4" FILLET	UNO
OPEN HOLES	13/16" UNO	FINISH PER SPECS
BOLTS	3/4" A325N	UNO
PAINT	1 S/C STD PRIMER U.N.O.	UNO

PROJECT NAME
OLDE ORCHARD ELEMENTARY SCHOOL

LOCATION
800 McNAUGHTEN RD. COLUMBUS, OHIO 43213

CONTRACTOR
THOMAS AND MARKER CONSTRUCTION

ARCHITECT
BRAUN & STEIDL

North Central Fabrication, Ltd.
NORTH CENTRAL FABRICATION
Mansfield, OH 44906
419-529-2744 FAX 419-529-5387 http://www.northcentralfab
AISC CERTIFIED FABRICATOR

DESCRIPTION	DATE	DATE	JOB No.
ANGLE	05/18/2011		70234
	DRAWN BY TMc	CHECKED BY TAN	DRG No. A1

PHASE				
1	2	3	4	5
5	0	0	0	0

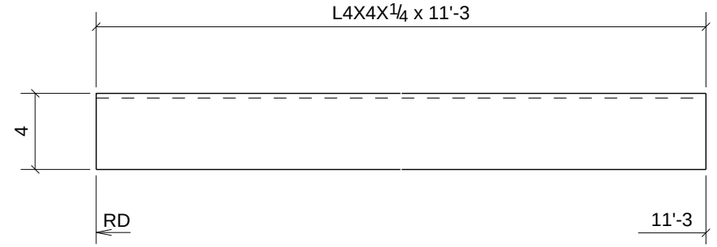

PROCESS CONTROL
PROCESS BY
FAB: _____
FIT AND WELD: _____
INSPECTION: _____
OTHER (IF NEEDED) _____
_____ : _____
_____ : _____
_____ : _____
_____ : _____
REFERENCE LATEST ERECTION DRAWINGS FOR MATERIAL & FABRICATION INFORMATION

5 - ANGLES - A2

DATE	NO.	DESCRIPTION	BY
5/28/11	B	For Checking	TMc
5/16/11	A	For Approval	TMc

BILL OF MATERIAL

Qty Ea.	Qty Tot	Piece Mark	Description	Length	Weight Total	Remarks	Adv Mill #	Steel Grade
	5	A2	ANGLES					
	5		L4X4X1/4	11'-3"	371	SQ-2		A36

STEEL ASTM	A992	UNO
ELECTRODES	E70XX L.H.	UNO
WELDS	1/4" FILLET	UNO
OPEN HOLES	13/16" UNO	FINISH PER SPECS
BOLTS	3/4" A325N	UNO
PAINT	1 S/C STD PRIMER U.N.O.	UNO

PROJECT NAME
OLDE ORCHARD ELEMENTARY SCHOOL

LOCATION
800 McNAUGHTEN RD. COLUMBUS, OHIO 43213

CONTRACTOR
THOMAS AND MARKER CONSTRUCTION

ARCHITECT
BRAUN & STEIDL

North Central Fabrication, Ltd.

NORTH CENTRAL FABRICATION
Mansfield, OH 44906
419-529-2744 FAX 419-529-5387 http://www.northcentralfab

AISC CERTIFIED FABRICATOR

DESCRIPTION	DATE	DATE	JOB No.
ANGLE	05/18/2011		70234
	DRAWN BY TMc	CHECKED BY TAN	DRG No. A2

PHASE				
1	2	3	4	5
1	0	0	0	0

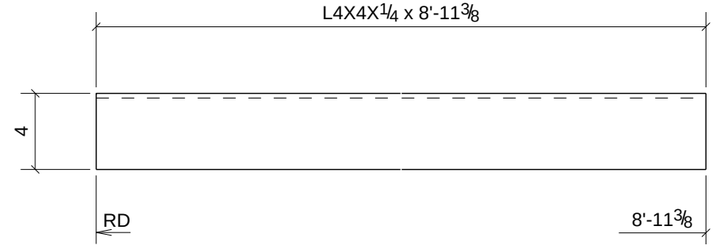

PROCESS CONTROL
PROCESS BY
FAB: _____
FIT AND WELD: _____
INSPECTION: _____
OTHER (IF NEEDED) _____
_____ : _____
_____ : _____
_____ : _____
_____ : _____
REFERENCE LATEST ERECTION DRAWINGS FOR MATERIAL & FABRICATION INFORMATION

ONE - ANGLE - A4

DATE	NO.	DESCRIPTION	BY
5/28/11	B	For Checking	TMc
5/16/11	A	For Approval	TMc

BILL OF MATERIAL

Qty Ea.	Qty Tot	Piece Mark	Description	Length	Weight Total	Remarks	Adv Mill #	Steel Grade
	1	A4	ANGLE					
	1		L4X4X1/4	8'-11 3/8"	59	SQ-2		A36

STEEL ASTM	A992	UNO
ELECTRODES	E70XX L.H.	UNO
WELDS	1/4" FILLET	UNO
OPEN HOLES	13/16" UNO	FINISH PER SPECS
BOLTS	3/4" A325N	UNO
PAINT	1 S/C STD PRIMER U.N.O.	UNO

PROJECT NAME
OLDE ORCHARD ELEMENTARY SCHOOL

LOCATION
800 McNAUGHTEN RD. COLUMBUS, OHIO 43213

CONTRACTOR
THOMAS AND MARKER CONSTRUCTION

ARCHITECT
BRAUN & STEIDL

North Central Fabrication, Ltd.

NORTH CENTRAL FABRICATION
Mansfield, OH 44906
419-529-2744 FAX 419-529-5387 http://www.northcentralfab

AISC CERTIFIED FABRICATOR

DESCRIPTION	DATE	DATE	JOB No.
ANGLE	05/18/2011		70234
	DRAWN BY TMc	CHECKED BY TAN	DRG No. A4

PHASE				
1	2	3	4	5
4	0	0	0	0

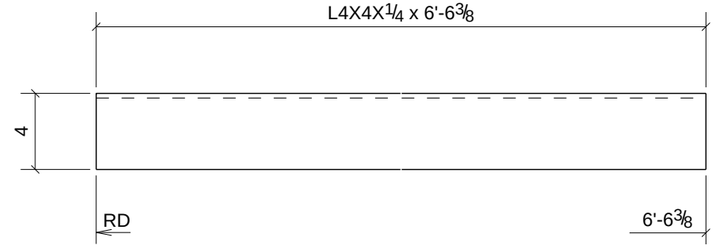

4 - ANGLES - A5

PROCESS CONTROL
PROCESS BY
FAB: _____
FIT AND WELD: _____
INSPECTION: _____
OTHER (IF NEEDED) _____
_____ : _____
_____ : _____
_____ : _____
_____ : _____
REFERENCE LATEST ERECTION DRAWINGS FOR MATERIAL & FABRICATION INFORMATION

DATE	NO.	DESCRIPTION	BY
5/28/11	B	For Checking	TMc
5/16/11	A	For Approval	TMc

BILL OF MATERIAL

Qty Ea.	Qty Tot	Piece Mark	Description	Length	Weight Total	Remarks	Adv Mill #	Steel Grade
	4	A5	ANGLES					
	4		L4X4X1/4	6'-6 3/8"	172	SQ-2		A36

STEEL ASTM	A992	UNO
ELECTRODES	E70XX L.H.	UNO
WELDS	1/4" FILLET	UNO
OPEN HOLES	13/16" UNO	FINISH PER SPECS
BOLTS	3/4" A325N	UNO
PAINT	1 S/C STD PRIMER U.N.O.	UNO

PROJECT NAME
OLDE ORCHARD ELEMENTARY SCHOOL

LOCATION
800 McNAUGHTEN RD. COLUMBUS, OHIO 43213

CONTRACTOR
THOMAS AND MARKER CONSTRUCTION

ARCHITECT
BRAUN & STEIDL

North Central Fabrication, Ltd.

NORTH CENTRAL FABRICATION
Mansfield, OH 44906
419-529-2744 FAX 419-529-5387 http://www.northcentralfab

AISC CERTIFIED FABRICATOR

DESCRIPTION	DATE	DATE	JOB No.
ANGLE	05/18/2011		70234
	DRAWN BY TMc	CHECKED BY TAN	DRG No. A5

PHASE				
1	2	3	4	5
2	0	0	0	0

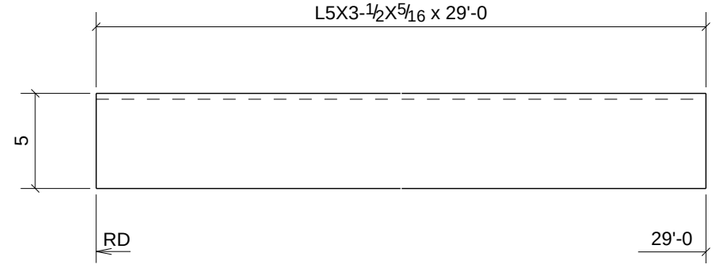

PROCESS CONTROL
PROCESS BY
FAB: _____
FIT AND WELD: _____
INSPECTION: _____
OTHER (IF NEEDED) _____
_____ : _____
_____ : _____
_____ : _____
_____ : _____
_____ : _____
REFERENCE LATEST ERECTION DRAWINGS FOR MATERIAL & FABRICATION INFORMATION

2 - ANGLES - A6

DATE	NO.	DESCRIPTION	BY
5/28/11	B	For Checking	TMc
5/16/11	A	For Approval	TMc

BILL OF MATERIAL

Qty Ea.	Qty Tot	Piece Mark	Description	Length	Weight Total	Remarks	Adv Mill #	Steel Grade
	2	A6	ANGLES					
	2		L5X3-1/2X5/16	29'-0"	505	SQ-2		A36

STEEL ASTM	A992	UNO
ELECTRODES	E70XX L.H.	UNO
WELDS	1/4" FILLET	UNO
OPEN HOLES	13/16" UNO	FINISH PER SPECS
BOLTS	3/4" A325N	UNO
PAINT	1 S/C STD PRIMER U.N.O.	UNO

PROJECT NAME
OLDE ORCHARD ELEMENTARY SCHOOL

LOCATION
800 McNAUGHTEN RD. COLUMBUS, OHIO 43213

CONTRACTOR
THOMAS AND MARKER CONSTRUCTION

ARCHITECT
BRAUN & STEIDL

North Central Fabrication, Ltd.
NORTH CENTRAL FABRICATION
Mansfield, OH 44906
419-529-2744 FAX 419-529-5387 http://www.northcentralfab
AISC CERTIFIED FABRICATOR

DESCRIPTION	DATE	DATE	JOB No.
ANGLE	05/18/2011		70234
	DRAWN BY TMc	CHECKED BY TAN	DRG No. A6

PHASE				
1	2	3	4	5
4	0	0	0	0

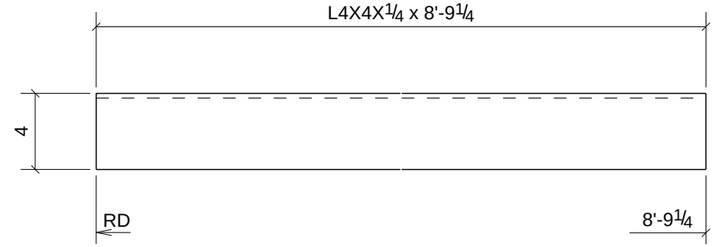

PROCESS CONTROL
PROCESS BY
FAB: _____
FIT AND WELD: _____
INSPECTION: _____
OTHER (IF NEEDED) _____
_____ : _____
_____ : _____
_____ : _____
_____ : _____
REFERENCE LATEST ERECTION DRAWINGS FOR MATERIAL & FABRICATION INFORMATION

4 - ANGLES - A7

DATE	NO.	DESCRIPTION	BY
5/28/11	B	For Checking	TMc
5/16/11	A	For Approval	TMc

BILL OF MATERIAL

Qty Ea.	Qty Tot	Piece Mark	Description	Length	Weight Total	Remarks	Adv Mill #	Steel Grade
	4	A7	ANGLES					
	4		L4X4X1/4	8'-9 1/4"	232	SQ-2		A36

STEEL ASTM	A992	UNO
ELECTRODES	E70XX L.H.	UNO
WELDS	1/4" FILLET	UNO
OPEN HOLES	13/16" UNO	FINISH PER SPECS
BOLTS	3/4" A325N	UNO
PAINT	1 S/C STD PRIMER U.N.O.	UNO

PROJECT NAME
OLDE ORCHARD ELEMENTARY SCHOOL

LOCATION
800 McNAUGHTEN RD. COLUMBUS, OHIO 43213

CONTRACTOR
THOMAS AND MARKER CONSTRUCTION

ARCHITECT
BRAUN & STEIDL

North Central Fabrication, Ltd.
NORTH CENTRAL FABRICATION
Mansfield, OH 44906
419-529-2744 FAX 419-529-5387 http://www.northcentralfab
AISC CERTIFIED FABRICATOR

DESCRIPTION	DATE	DATE	JOB No.
ANGLE	05/18/2011		70234
	DRAWN BY TMc	CHECKED BY TAN	DRG No. A7

PHASE				
1	2	3	4	5
2	0	0	0	0

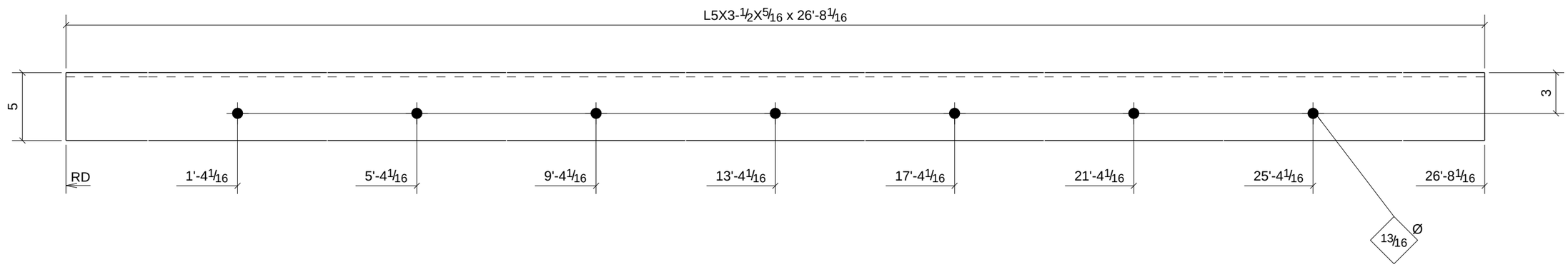

PROCESS CONTROL
PROCESS BY
FAB: _____
FIT AND WELD: _____
INSPECTION: _____
OTHER (IF NEEDED) _____
_____ : _____
_____ : _____
_____ : _____
_____ : _____
REFERENCE LATEST ERECTION DRAWINGS FOR MATERIAL & FABRICATION INFORMATION

2 - ANGLES - A11

DATE	NO.	DESCRIPTION	BY
5/28/11	B	For Checking	TMc
5/16/11	A	For Approval	TMc

BILL OF MATERIAL

Qty Ea.	Qty Tot	Piece Mark	Description	Length	Weight Total	Remarks	Adv Mill #	Steel Grade
	2	A11	ANGLES					
	2		L5X3-1/2X5/16	26'-8 1/16"	465	SQ-2		A36

STEEL ASTM	A992	UNO
ELECTRODES	E70XX L.H.	UNO
WELDS	1/4" FILLET	UNO
OPEN HOLES	13/16" UNO	FINISH PER SPECS
BOLTS	3/4" A325N	UNO
PAINT	1 S/C STD PRIMER U.N.O.	UNO

PROJECT NAME
OLDE ORCHARD ELEMENTARY SCHOOL

LOCATION
800 McNAUGHTEN RD. COLUMBUS, OHIO 43213

CONTRACTOR
THOMAS AND MARKER CONSTRUCTION

ARCHITECT
BRAUN & STEIDL

North Central Fabrication, Ltd.
NORTH CENTRAL FABRICATION
Mansfield, OH 44906
419-529-2744 FAX 419-529-5387 http://www.northcentralfab
AISC CERTIFIED FABRICATOR

DESCRIPTION	DATE	DATE	JOB No.
ANGLE	05/17/2011		70234
	DRAWN BY TMc	CHECKED BY TAN	DRG No. A11

PHASE				
1	2	3	4	5
1	0	0	0	0

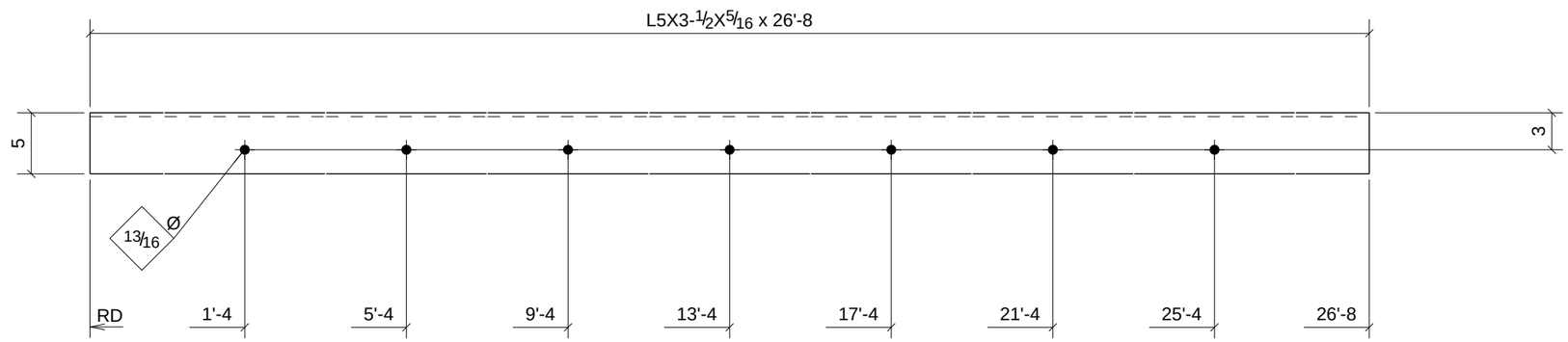

PROCESS CONTROL
PROCESS BY
FAB: _____
FIT AND WELD: _____
INSPECTION: _____
OTHER (IF NEEDED)
_____ : _____
_____ : _____
_____ : _____
_____ : _____
_____ : _____
REFERENCE LATEST ERECTION DRAWINGS FOR MATERIAL & FABRICATION INFORMATION

ONE - ANGLE - A15

DATE	NO.	DESCRIPTION	BY
5/28/11	B	For Checking	TMc
5/16/11	A	For Approval	TMc

BILL OF MATERIAL

Qty Ea.	Qty Tot	Piece Mark	Description	Length	Weight Total	Remarks	Adv Mill #	Steel Grade
	1	A15	ANGLE					
	1		L5X3-1/2X5/16	26'-8"	232	SQ-2		A36

STEEL ASTM	A992	UNO
ELECTRODES	E70XX L.H.	UNO
WELDS	1/4" FILLET	UNO
OPEN HOLES	13/16" UNO	FINISH PER SPECS
BOLTS	3/4" A325N	UNO
PAINT	1 S/C STD PRIMER U.N.O.	UNO

PROJECT NAME
OLDE ORCHARD ELEMENTARY SCHOOL

LOCATION
800 McNAUGHTEN RD. COLUMBUS, OHIO 43213

CONTRACTOR
THOMAS AND MARKER CONSTRUCTION

ARCHITECT
BRAUN & STEIDL

North Central Fabrication, Ltd.
NORTH CENTRAL FABRICATION
Mansfield, OH 44906
419-529-2744 FAX 419-529-5387 http://www.northcentralfab
AISC CERTIFIED FABRICATOR

DESCRIPTION	DATE	DATE	JOB No.
ANGLE	05/18/2011		70234
	DRAWN BY TMc	CHECKED BY TAN	DRG No. A15

PHASE				
1	2	3	4	5
1	0	0	0	0

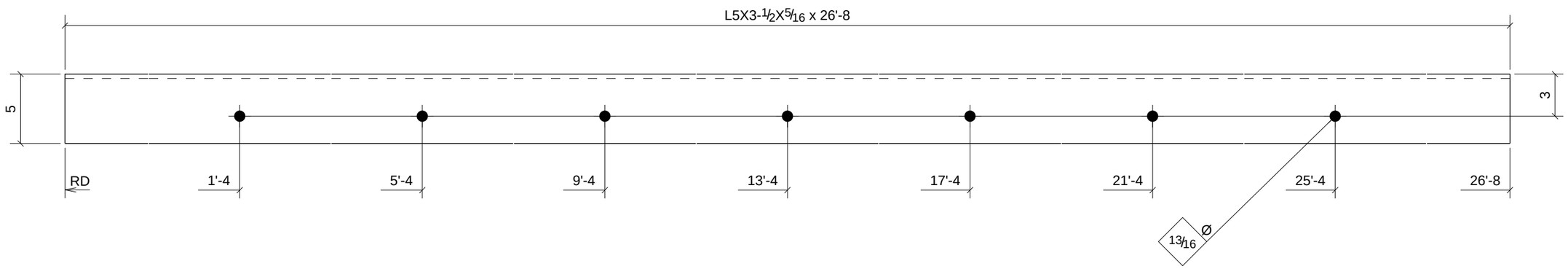

PROCESS CONTROL
PROCESS BY
FAB: _____
FIT AND WELD: _____
INSPECTION: _____
OTHER (IF NEEDED) _____
_____ : _____
_____ : _____
_____ : _____
_____ : _____
REFERENCE LATEST ERECTION DRAWINGS FOR MATERIAL & FABRICATION INFORMATION

ONE - ANGLE - A16

DATE	NO.	DESCRIPTION	BY
5/28/11	B	For Checking	TMc
5/16/11	A	For Approval	TMc

BILL OF MATERIAL

Qty Ea.	Qty Tot	Piece Mark	Description	Length	Weight Total	Remarks	Adv Mill #	Steel Grade
	1	A16	ANGLE					
	1		L5X3-1/2X5/16	26'-8"	232	SQ-2		A36

STEEL ASTM	A992	UNO
ELECTRODES	E70XX L.H.	UNO
WELDS	1/4" FILLET	UNO
OPEN HOLES	13/16" UNO	FINISH PER SPECS
BOLTS	3/4" A325N	UNO
PAINT	1 S/C STD PRIMER U.N.O.	UNO

PROJECT NAME
OLDE ORCHARD ELEMENTARY SCHOOL

LOCATION
800 McNAUGHTEN RD. COLUMBUS, OHIO 43213

CONTRACTOR
THOMAS AND MARKER CONSTRUCTION

ARCHITECT
BRAUN & STEIDL

North Central Fabrication, Ltd.
NORTH CENTRAL FABRICATION
Mansfield, OH 44906
419-529-2744 FAX 419-529-5387 http://www.northcentralfab
AISC CERTIFIED FABRICATOR

DESCRIPTION	DATE	DATE	JOB No.
ANGLE	05/18/2011		70234
	DRAWN BY TMc	CHECKED BY TAN	DRG No. A16

PHASE				
1	2	3	4	5
2	0	0	0	0

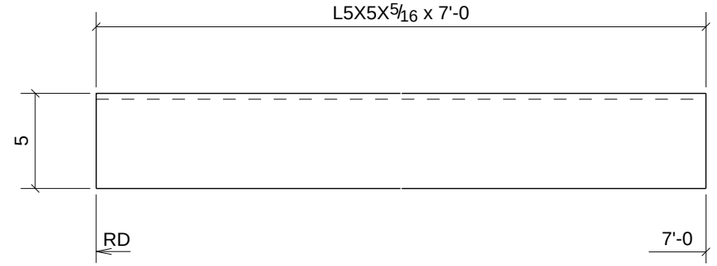

PROCESS CONTROL
PROCESS BY
FAB: _____
FIT AND WELD: _____
INSPECTION: _____
OTHER (IF NEEDED) _____
_____ : _____
_____ : _____
_____ : _____
_____ : _____
_____ : _____
REFERENCE LATEST ERECTION DRAWINGS FOR MATERIAL & FABRICATION INFORMATION

2 - ANGLES - A17

DATE	NO.	DESCRIPTION	BY
5/28/11	B	For Checking	TMc
5/16/11	A	For Approval	TMc

BILL OF MATERIAL

Qty Ea.	Qty Tot	Piece Mark	Description	Length	Weight Total	Remarks	Adv Mill #	Steel Grade
	2	A17	ANGLES					
	2		L5X5X5/16	7'-0"	144	SQ-2		A36

STEEL ASTM	A992	UNO
ELECTRODES	E70XX L.H.	UNO
WELDS	1/4" FILLET	UNO
OPEN HOLES	13/16" UNO	FINISH PER SPECS
BOLTS	3/4" A325N	UNO
PAINT	1 S/C STD PRIMER U.N.O.	UNO

PROJECT NAME
OLDE ORCHARD ELEMENTARY SCHOOL

LOCATION
800 McNAUGHTEN RD. COLUMBUS, OHIO 43213

CONTRACTOR
THOMAS AND MARKER CONSTRUCTION

ARCHITECT
BRAUN & STEIDL

North Central Fabrication, Ltd.
NORTH CENTRAL FABRICATION
Mansfield, OH 44906
419-529-2744 FAX 419-529-5387 http://www.northcentralfab
AISC CERTIFIED FABRICATOR

DESCRIPTION	DATE	DATE	JOB No.
ANGLE	05/18/2011		70234
	DRAWN BY TMc	CHECKED BY TAN	DRG No. A17

PHASE				
1	2	3	4	5
1	0	0	0	0

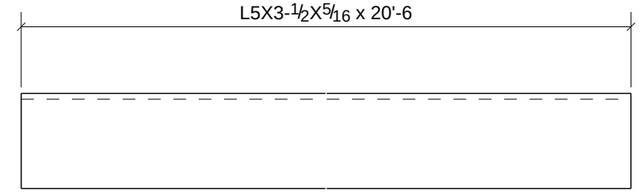

PROCESS CONTROL
PROCESS BY
FAB: _____
FIT AND WELD: _____
INSPECTION: _____
OTHER (IF NEEDED) _____
_____ : _____
_____ : _____
_____ : _____
_____ : _____
REFERENCE LATEST ERECTION DRAWINGS FOR MATERIAL & FABRICATION INFORMATION

ONE - ANGLE - A18

DATE	NO.	DESCRIPTION	BY
5/28/11	B	For Checking	TMc
5/16/11	A	For Approval	TMc

BILL OF MATERIAL

Qty Ea.	Qty Tot	Piece Mark	Description	Length	Weight Total	Remarks	Adv Mill #	Steel Grade
	1	A18	ANGLE					
	1		L5X3-1/2X5/16	20'-6"	179	SQ-2		A36

STEEL ASTM	A992	UNO
ELECTRODES	E70XX L.H.	UNO
WELDS	1/4" FILLET	UNO
OPEN HOLES	13/16" UNO	FINISH PER SPECS
BOLTS	3/4" A325N	UNO
PAINT	1 S/C STD PRIMER U.N.O.	UNO

PROJECT NAME
OLDE ORCHARD ELEMENTARY SCHOOL

LOCATION
800 McNAUGHTEN RD. COLUMBUS, OHIO 43213

CONTRACTOR
THOMAS AND MARKER CONSTRUCTION

ARCHITECT
BRAUN & STEIDL

North Central Fabrication, Ltd.
NORTH CENTRAL FABRICATION
Mansfield, OH 44906
419-529-2744 FAX 419-529-5387 http://www.northcentralfab
AISC CERTIFIED FABRICATOR

DESCRIPTION	DATE	DATE	JOB No.
ANGLE	05/18/2011		70234
	DRAWN BY TMc	CHECKED BY TAN	DRG No. A18

PHASE				
1	2	3	4	5
1	0	0	0	0

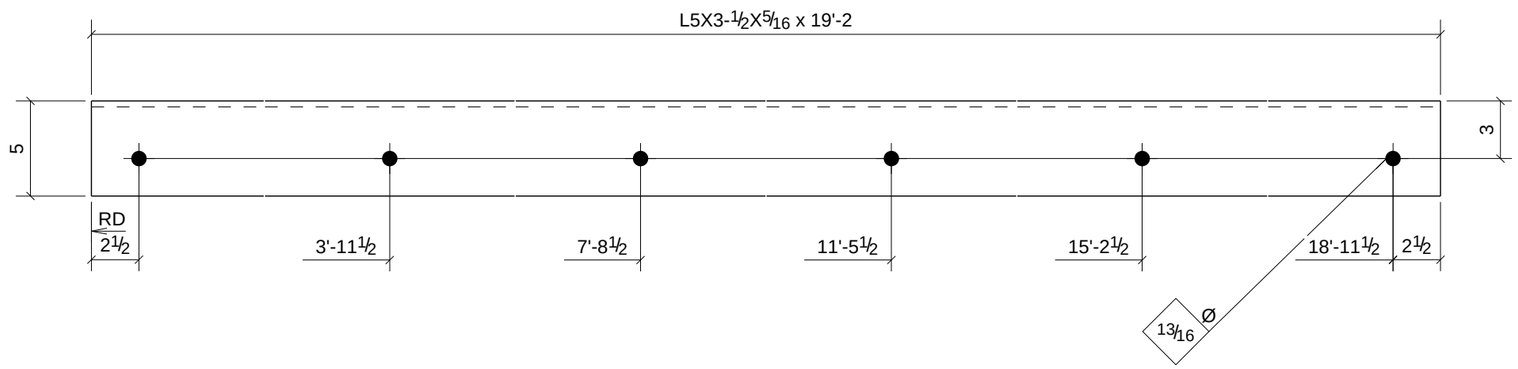

PROCESS CONTROL
PROCESS BY
FAB: _____
FIT AND WELD: _____
INSPECTION: _____
OTHER (IF NEEDED) _____
_____ : _____
_____ : _____
_____ : _____
_____ : _____
REFERENCE LATEST ERECTION DRAWINGS FOR MATERIAL & FABRICATION INFORMATION

ONE - ANGLE - A19

DATE	NO.	DESCRIPTION	BY
5/28/11	B	For Checking	TMc
5/16/11	A	For Approval	TMc

BILL OF MATERIAL

Qty Ea.	Qty Tot	Piece Mark	Description	Length	Weight Total	Remarks	Adv Mill #	Steel Grade
	1	A19	ANGLE					
	1		L5X3-1/2X5/16	19'-2"	167	SQ-2		A36

STEEL ASTM	A992		UNO
ELECTRODES	E70XX L.H.		UNO
WELDS	1/4" FILLET		UNO
OPEN HOLES	13/16"	UNO	FINISH PER SPECS
BOLTS	3/4" A325N		UNO
PAINT	1 S/C STD PRIMER U.N.O.		UNO

PROJECT NAME
OLDE ORCHARD ELEMENTARY SCHOOL

LOCATION
800 McNAUGHTEN RD. COLUMBUS, OHIO 43213

CONTRACTOR
THOMAS AND MARKER CONSTRUCTION

ARCHITECT
BRAUN & STEIDL

North Central Fabrication, Ltd.
NORTH CENTRAL FABRICATION
Mansfield, OH 44906
419-529-2744 FAX 419-529-5387 http://www.northcentralfab
AISC CERTIFIED FABRICATOR

DESCRIPTION	DATE	DATE	JOB No.
ANGLE	05/18/2011		70234
	DRAWN BY TMc	CHECKED BY TAN	DRG No. A19

PHASE				
1	2	3	4	5
1	0	0	0	0

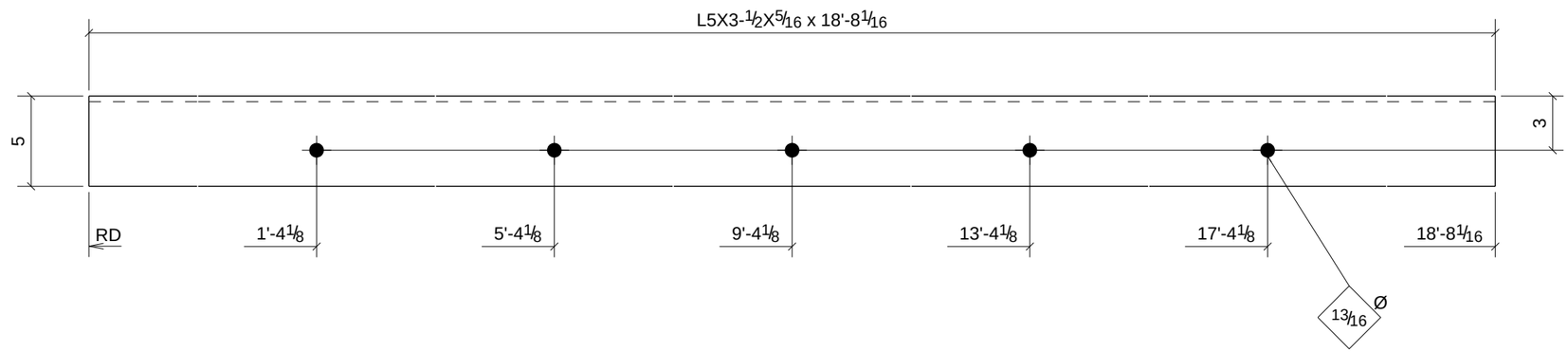

PROCESS CONTROL
PROCESS BY
FAB: _____
FIT AND WELD: _____
INSPECTION: _____
OTHER (IF NEEDED)
_____ : _____
_____ : _____
_____ : _____
_____ : _____
_____ : _____
REFERENCE LATEST ERECTION DRAWINGS FOR MATERIAL & FABRICATION INFORMATION

ONE - ANGLE - A20

DATE	NO.	DESCRIPTION	BY
5/28/11	B	For Checking	TMc
5/16/11	A	For Approval	TMc

BILL OF MATERIAL

Qty Ea.	Qty Tot	Piece Mark	Description	Length	Weight Total	Remarks	Adv Mill #	Steel Grade
	1	A20	ANGLE					
	1		L5X3-1/2X5/16	18'-8 1/16"	163	SQ-2		A36

STEEL ASTM	A992	UNO
ELECTRODES	E70XX L.H.	UNO
WELDS	1/4" FILLET	UNO
OPEN HOLES	13/16" UNO	FINISH PER SPECS
BOLTS	3/4" A325N	UNO
PAINT	1 S/C STD PRIMER U.N.O.	UNO

PROJECT NAME
OLDE ORCHARD ELEMENTARY SCHOOL

LOCATION
800 McNAUGHTEN RD. COLUMBUS, OHIO 43213

CONTRACTOR
THOMAS AND MARKER CONSTRUCTION

ARCHITECT
BRAUN & STEIDL

North Central Fabrication, Ltd.
NORTH CENTRAL FABRICATION
Mansfield, OH 44906
419-529-2744 FAX 419-529-5387 http://www.northcentralfab
AISC CERTIFIED FABRICATOR

DESCRIPTION	DATE		JOB No.
ANGLE	05/17/2011	DATE	70234
	DRAWN BY TMc	CHECKED BY TAN	DRG No. A20

PHASE				
1	2	3	4	5
1	0	0	0	0

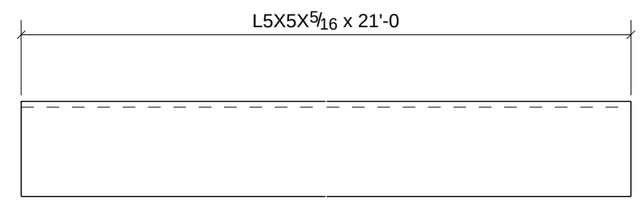

PROCESS CONTROL
PROCESS BY
FAB: _____
FIT AND WELD: _____
INSPECTION: _____
OTHER (IF NEEDED) _____
_____ : _____
_____ : _____
_____ : _____
_____ : _____
REFERENCE LATEST ERECTION DRAWINGS FOR MATERIAL & FABRICATION INFORMATION

ONE - ANGLE - A21

DATE	NO.	DESCRIPTION	BY
5/28/11	B	For Checking	TMc
5/16/11	A	For Approval	TMc

BILL OF MATERIAL

Qty Ea.	Qty Tot	Piece Mark	Description	Length	Weight Total	Remarks	Adv Mill #	Steel Grade
	1	A21	ANGLE					
	1		L5X5X5/16	21'-0"	217	SQ-2		A36

STEEL ASTM	A992	UNO
ELECTRODES	E70XX L.H.	UNO
WELDS	1/4" FILLET	UNO
OPEN HOLES	13/16" UNO	FINISH PER SPECS
BOLTS	3/4" A325N	UNO
PAINT	1 S/C STD PRIMER U.N.O.	UNO

PROJECT NAME
OLDE ORCHARD ELEMENTARY SCHOOL

LOCATION
800 McNAUGHTEN RD. COLUMBUS, OHIO 43213

CONTRACTOR
THOMAS AND MARKER CONSTRUCTION

ARCHITECT
BRAUN & STEIDL

North Central Fabrication, Ltd.
NORTH CENTRAL FABRICATION
Mansfield, OH 44906
419-529-2744 FAX 419-529-5387 http://www.northcentralfab
AISC CERTIFIED FABRICATOR

DESCRIPTION	DATE	DATE	JOB No.
ANGLE	05/18/2011		70234
	DRAWN BY TMc	CHECKED BY TAN	DRG No. A21

PHASE				
1	2	3	4	5
3	0	0	0	0

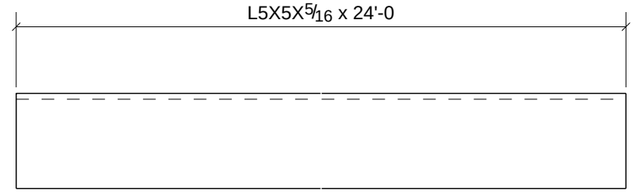

3 - ANGLES - A22

PROCESS CONTROL
PROCESS BY
FAB: _____
FIT AND WELD: _____
INSPECTION: _____
OTHER (IF NEEDED) _____
_____ : _____
_____ : _____
_____ : _____
_____ : _____
REFERENCE LATEST ERECTION DRAWINGS FOR MATERIAL & FABRICATION INFORMATION

DATE	NO.	DESCRIPTION	BY
5/28/11	B	For Checking	TMc
5/16/11	A	For Approval	TMc

BILL OF MATERIAL

Qty Ea.	Qty Tot	Piece Mark	Description	Length	Weight Total	Remarks	Adv Mill #	Steel Grade
	3	A22	ANGLES					
	3		L5X5X5/16	24'-0"	742	SQ-2		A36

STEEL ASTM	A992	UNO
ELECTRODES	E70XX L.H.	UNO
WELDS	1/4" FILLET	UNO
OPEN HOLES	13/16" UNO	FINISH PER SPECS
BOLTS	3/4" A325N	UNO
PAINT	1 S/C STD PRIMER U.N.O.	UNO

PROJECT NAME
OLDE ORCHARD ELEMENTARY SCHOOL

LOCATION
800 McNAUGHTEN RD. COLUMBUS, OHIO 43213

CONTRACTOR
THOMAS AND MARKER CONSTRUCTION

ARCHITECT
BRAUN & STEIDL

North Central Fabrication, Ltd.
NORTH CENTRAL FABRICATION
Mansfield, OH 44906
419-529-2744 FAX 419-529-5387 http://www.northcentralfab
AISC CERTIFIED FABRICATOR

DESCRIPTION	DATE	DATE	JOB No.
ANGLE	05/18/2011		70234
	DRAWN BY TMc	CHECKED BY TAN	DRG No. A22

PHASE				
1	2	3	4	5
3	0	0	0	0

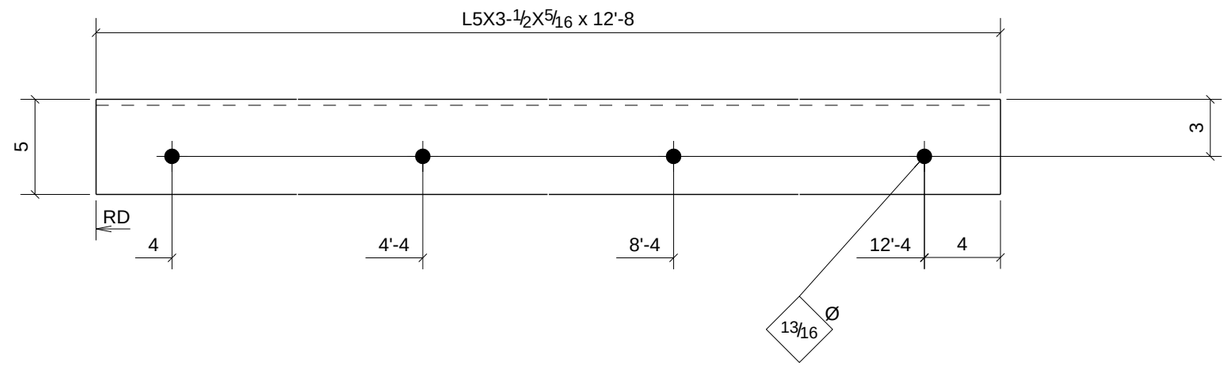

PROCESS CONTROL
PROCESS BY
FAB: _____
FIT AND WELD: _____
INSPECTION: _____
OTHER (IF NEEDED) _____
_____ : _____
_____ : _____
_____ : _____
_____ : _____
REFERENCE LATEST ERECTION DRAWINGS FOR MATERIAL & FABRICATION INFORMATION

3 - ANGLES - A23

DATE	NO.	DESCRIPTION	BY
5/28/11	B	For Checking	TMc
5/16/11	A	For Approval	TMc

BILL OF MATERIAL

Qty Ea.	Qty Tot	Piece Mark	Description	Length	Weight Total	Remarks	Adv Mill #	Steel Grade
	3	A23	ANGLES					
	3		L5X3-1/2X5/16	12'-8"	331	SQ-2		A36

STEEL ASTM	A992	UNO
ELECTRODES	E70XX L.H.	UNO
WELDS	1/4" FILLET	UNO
OPEN HOLES	13/16" UNO	FINISH PER SPECS
BOLTS	3/4" A325N	UNO
PAINT	1 S/C STD PRIMER U.N.O.	UNO

PROJECT NAME
OLDE ORCHARD ELEMENTARY SCHOOL

LOCATION
800 McNAUGHTEN RD. COLUMBUS, OHIO 43213

CONTRACTOR
THOMAS AND MARKER CONSTRUCTION

ARCHITECT
BRAUN & STEIDL

North Central Fabrication, Ltd.
NORTH CENTRAL FABRICATION
Mansfield, OH 44906
419-529-2744 FAX 419-529-5387 http://www.northcentralfab
AISC CERTIFIED FABRICATOR

DESCRIPTION	DATE	DATE	JOB No.
ANGLE	05/17/2011		70234
	DRAWN BY TMc	CHECKED BY TAN	DRG No. A23

PHASE				
1	2	3	4	5
2	0	0	0	0

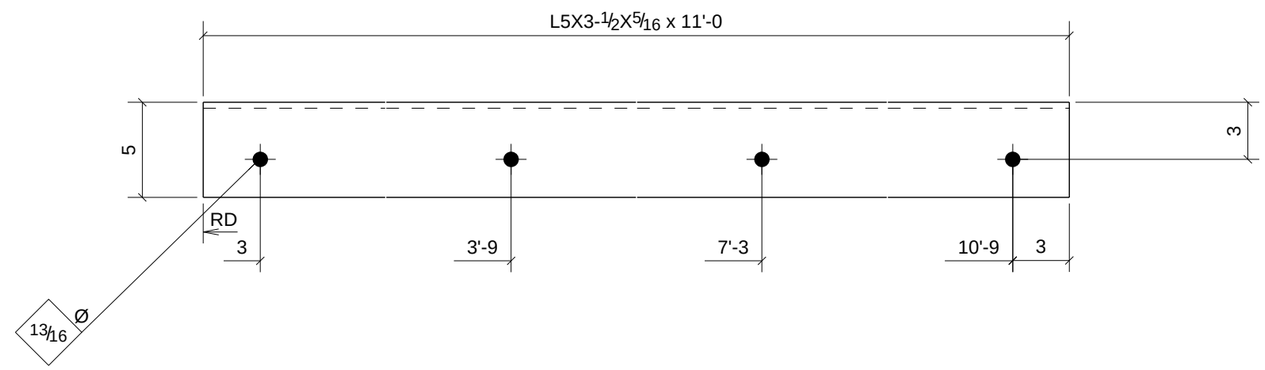

PROCESS CONTROL
PROCESS BY
FAB: _____
FIT AND WELD: _____
INSPECTION: _____
OTHER (IF NEEDED) _____
_____ : _____
_____ : _____
_____ : _____
_____ : _____
REFERENCE LATEST ERECTION DRAWINGS FOR MATERIAL & FABRICATION INFORMATION

2 - ANGLES - A24

DATE	NO.	DESCRIPTION	BY
5/28/11	B	For Checking	TMc
5/16/11	A	For Approval	TMc

BILL OF MATERIAL

Qty Ea.	Qty Tot	Piece Mark	Description	Length	Weight Total	Remarks	Adv Mill #	Steel Grade
	2	A24	ANGLES					
	2		L5X3-1/2X5/16	11'-0"	192	SQ-2		A36

STEEL ASTM	A992	UNO
ELECTRODES	E70XX L.H.	UNO
WELDS	1/4" FILLET	UNO
OPEN HOLES	13/16" UNO	FINISH PER SPECS
BOLTS	3/4" A325N	UNO
PAINT	1 S/C STD PRIMER U.N.O.	UNO

PROJECT NAME
OLDE ORCHARD ELEMENTARY SCHOOL

LOCATION
800 McNAUGHTEN RD. COLUMBUS, OHIO 43213

CONTRACTOR
THOMAS AND MARKER CONSTRUCTION

ARCHITECT
BRAUN & STEIDL

North Central Fabrication, Ltd.
NORTH CENTRAL FABRICATION
Mansfield, OH 44906
419-529-2744 FAX 419-529-5387 http://www.northcentralfab
AISC CERTIFIED FABRICATOR

DESCRIPTION	DATE	DATE	JOB No.
ANGLE	05/17/2011		70234
	DRAWN BY TMc	CHECKED BY TAN	DRG No. A24

PHASE				
1	2	3	4	5
1	0	0	0	0

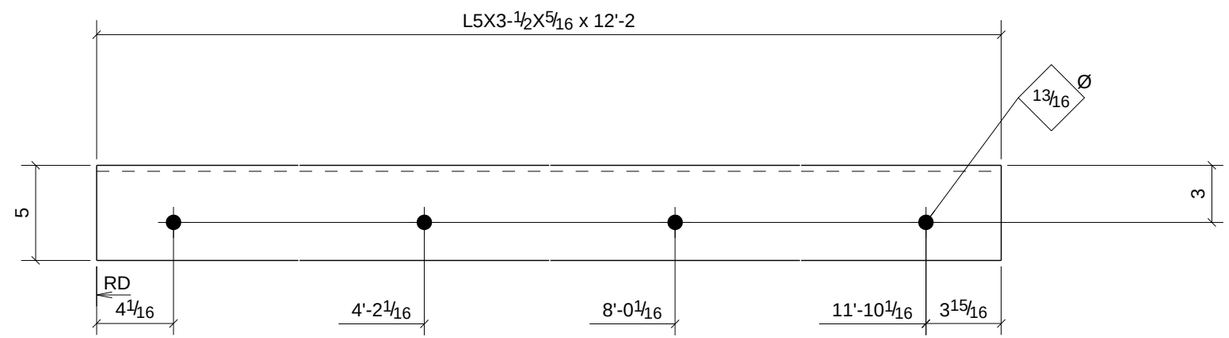

PROCESS CONTROL
PROCESS BY
FAB: _____
FIT AND WELD: _____
INSPECTION: _____
OTHER (IF NEEDED) _____
_____ : _____
_____ : _____
_____ : _____
_____ : _____
_____ : _____
REFERENCE LATEST ERECTION DRAWINGS FOR MATERIAL & FABRICATION INFORMATION

ONE - ANGLE - A25

DATE	NO.	DESCRIPTION	BY
5/28/11	B	For Checking	TMc
5/16/11	A	For Approval	TMc

BILL OF MATERIAL

Qty Ea.	Qty Tot	Piece Mark	Description	Length	Weight Total	Remarks	Adv Mill #	Steel Grade
	1	A25	ANGLE					
	1		L5X3-1/2X5/16	12'-2"	106	SQ-2		A36

STEEL ASTM	A992	UNO
ELECTRODES	E70XX L.H.	UNO
WELDS	1/4" FILLET	UNO
OPEN HOLES	13/16" UNO	FINISH PER SPECS
BOLTS	3/4" A325N	UNO
PAINT	1 S/C STD PRIMER U.N.O.	UNO

PROJECT NAME
OLDE ORCHARD ELEMENTARY SCHOOL

LOCATION
800 McNAUGHTEN RD. COLUMBUS, OHIO 43213

CONTRACTOR
THOMAS AND MARKER CONSTRUCTION

ARCHITECT
BRAUN & STEIDL

North Central Fabrication, Ltd.
NORTH CENTRAL FABRICATION
Mansfield, OH 44906
419-529-2744 FAX 419-529-5387 http://www.northcentralfab
AISC CERTIFIED FABRICATOR

DESCRIPTION	DATE	DATE	JOB No.
ANGLE	05/17/2011		70234
	DRAWN BY TMc	CHECKED BY TAN	DRG No. A25

PHASE				
1	2	3	4	5
2	0	0	0	0

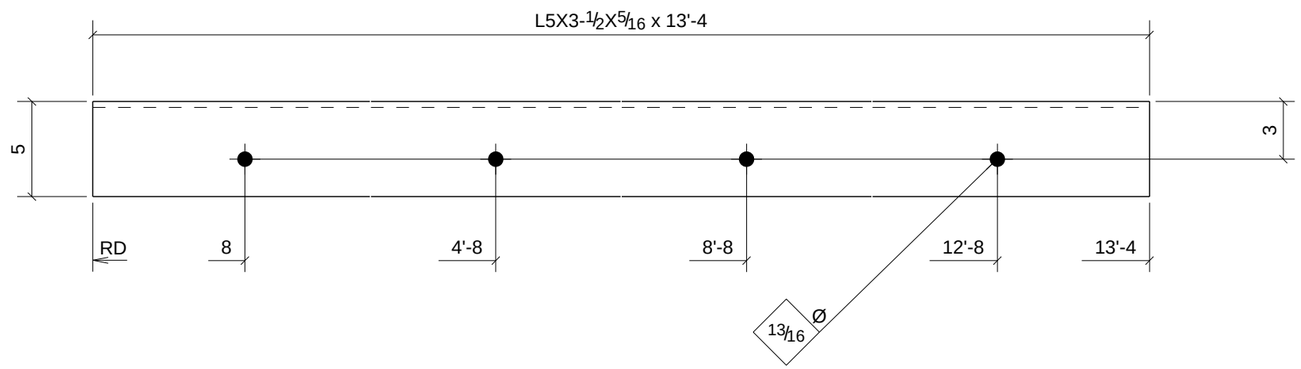

PROCESS CONTROL
PROCESS BY
FAB: _____
FIT AND WELD: _____
INSPECTION: _____
OTHER (IF NEEDED) _____
_____ : _____
_____ : _____
_____ : _____
_____ : _____
REFERENCE LATEST ERECTION DRAWINGS FOR MATERIAL & FABRICATION INFORMATION

2 - ANGLES - A26

DATE	NO.	DESCRIPTION	BY
5/28/11	B	For Checking	TMc
5/16/11	A	For Approval	TMc

BILL OF MATERIAL

Qty Ea.	Qty Tot	Piece Mark	Description	Length	Weight Total	Remarks	Adv Mill #	Steel Grade
	2	A26	ANGLES					
	2		L5X3-1/2X5/16	13'-4"	232	SQ-2		A36

STEEL ASTM	A992	UNO
ELECTRODES	E70XX L.H.	UNO
WELDS	1/4" FILLET	UNO
OPEN HOLES	13/16" UNO	FINISH PER SPECS
BOLTS	3/4" A325N	UNO
PAINT	1 S/C STD PRIMER U.N.O.	UNO

PROJECT NAME
OLDE ORCHARD ELEMENTARY SCHOOL

LOCATION
800 McNAUGHTEN RD. COLUMBUS, OHIO 43213

CONTRACTOR
THOMAS AND MARKER CONSTRUCTION

ARCHITECT
BRAUN & STEIDL

North Central Fabrication, Ltd.
NORTH CENTRAL FABRICATION
Mansfield, OH 44906
419-529-2744 FAX 419-529-5387 http://www.northcentralfab
AISC CERTIFIED FABRICATOR

DESCRIPTION	DATE	DATE	JOB No.
ANGLE	05/17/2011		70234
	DRAWN BY TMc	CHECKED BY TAN	DRG No. A26

PHASE				
1	2	3	4	5
1	0	0	0	0

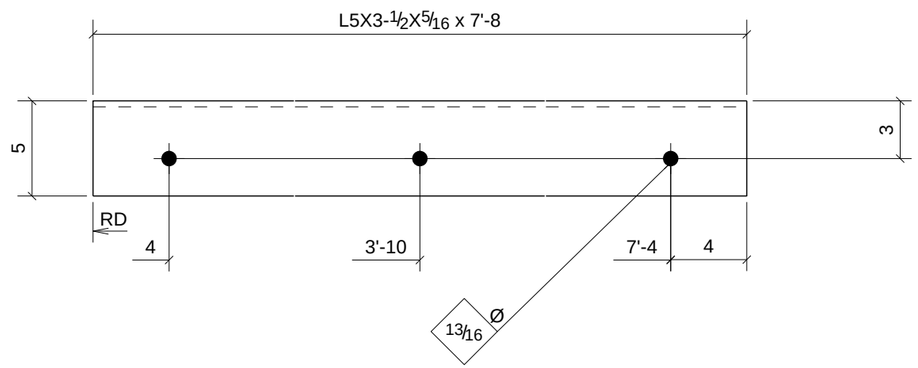

PROCESS CONTROL
PROCESS BY
FAB: _____
FIT AND WELD: _____
INSPECTION: _____
OTHER (IF NEEDED) _____
_____ : _____
_____ : _____
_____ : _____
_____ : _____
REFERENCE LATEST ERECTION DRAWINGS FOR MATERIAL & FABRICATION INFORMATION

ONE - ANGLE - A27

DATE	NO.	DESCRIPTION	BY
5/28/11	B	For Checking	TMc
5/16/11	A	For Approval	TMc

BILL OF MATERIAL

Qty Ea.	Qty Tot	Piece Mark	Description	Length	Weight Total	Remarks	Adv Mill #	Steel Grade
	1	A27	ANGLE					
	1		L5X3-1/2X5/16	7'-8"	67	SQ-2		A36

STEEL ASTM	A992	UNO
ELECTRODES	E70XX L.H.	UNO
WELDS	1/4" FILLET	UNO
OPEN HOLES	13/16" UNO	FINISH PER SPECS
BOLTS	3/4" A325N	UNO
PAINT	1 S/C STD PRIMER U.N.O.	UNO

PROJECT NAME
OLDE ORCHARD ELEMENTARY SCHOOL

LOCATION
800 McNAUGHTEN RD. COLUMBUS, OHIO 43213

CONTRACTOR
THOMAS AND MARKER CONSTRUCTION

ARCHITECT
BRAUN & STEIDL

North Central Fabrication, Ltd.

NORTH CENTRAL FABRICATION
Mansfield, OH 44906
419-529-2744 FAX 419-529-5387 http://www.northcentralfab

AISC CERTIFIED FABRICATOR

DESCRIPTION	DATE	DATE	JOB No.
ANGLE	05/17/2011		70234
	DRAWN BY TMc	CHECKED BY TAN	DRG No. A27

PHASE				
1	2	3	4	5
4	0	0	0	0

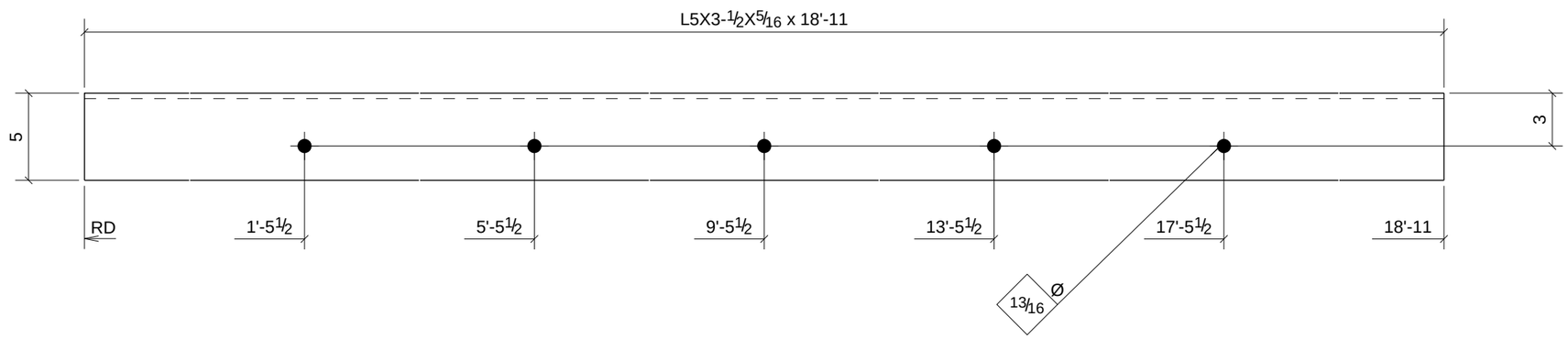

PROCESS CONTROL
PROCESS BY
FAB: _____
FIT AND WELD: _____
INSPECTION: _____
OTHER (IF NEEDED) _____
_____ : _____
_____ : _____
_____ : _____
_____ : _____
REFERENCE LATEST ERECTION DRAWINGS FOR MATERIAL & FABRICATION INFORMATION

4 - ANGLES - A28

DATE	NO.	DESCRIPTION	BY
5/28/11	B	For Checking	TMc
5/16/11	A	For Approval	TMc

BILL OF MATERIAL

Qty Ea.	Qty Tot	Piece Mark	Description	Length	Weight Total	Remarks	Adv Mill #	Steel Grade
	4	A28	ANGLES					
	4		L5X3-1/2X5/16	18'-11"	659	SQ-2		A36

STEEL ASTM	A992		UNO
ELECTRODES	E70XX L.H.		UNO
WELDS	1/4" FILLET		UNO
OPEN HOLES	13/16"	UNO	FINISH PER SPECS
BOLTS	3/4" A325N		UNO
PAINT	1 S/C STD PRIMER U.N.O.		UNO

PROJECT NAME
OLDE ORCHARD ELEMENTARY SCHOOL

LOCATION
800 McNAUGHTEN RD. COLUMBUS, OHIO 43213

CONTRACTOR
THOMAS AND MARKER CONSTRUCTION

ARCHITECT
BRAUN & STEIDL

North Central Fabrication, Ltd.
NORTH CENTRAL FABRICATION
Mansfield, OH 44906
419-529-2744 FAX 419-529-5387 http://www.northcentralfab
AISC CERTIFIED FABRICATOR

DESCRIPTION	DATE	DATE	JOB No.
ANGLE	05/17/2011		70234
	DRAWN BY TMc	CHECKED BY TAN	DRG No. A28

PHASE				
1	2	3	4	5
1	0	0	0	0

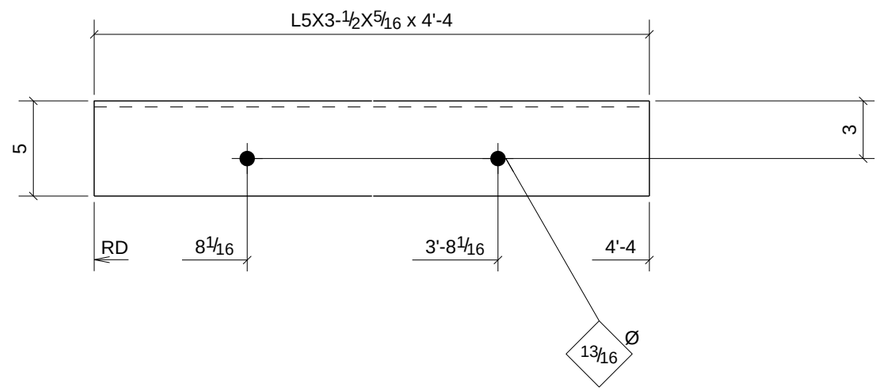

PROCESS CONTROL
PROCESS BY
FAB: _____
FIT AND WELD: _____
INSPECTION: _____
OTHER (IF NEEDED) _____
_____ : _____
_____ : _____
_____ : _____
_____ : _____
REFERENCE LATEST ERECTION DRAWINGS FOR MATERIAL & FABRICATION INFORMATION

ONE - ANGLE - A29

DATE	NO.	DESCRIPTION	BY
5/28/11	B	For Checking	TMc
5/16/11	A	For Approval	TMc

BILL OF MATERIAL

Qty Ea.	Qty Tot	Piece Mark	Description	Length	Weight Total	Remarks	Adv Mill #	Steel Grade
	1	A29	ANGLE					
	1		L5X3-1/2X5/16	4'-4"	38	SQ-2		A36

STEEL ASTM	A992		UNO
ELECTRODES	E70XX L.H.		UNO
WELDS	1/4" FILLET		UNO
OPEN HOLES	13/16"	UNO	FINISH PER SPECS
BOLTS	3/4" A325N		UNO
PAINT	1 S/C STD PRIMER U.N.O.		UNO

PROJECT NAME
OLDE ORCHARD ELEMENTARY SCHOOL

LOCATION
800 McNAUGHTEN RD. COLUMBUS, OHIO 43213

CONTRACTOR
THOMAS AND MARKER CONSTRUCTION

ARCHITECT
BRAUN & STEIDL

North Central Fabrication, Ltd.

NORTH CENTRAL FABRICATION
Mansfield, OH 44906
419-529-2744 FAX 419-529-5387 http://www.northcentralfab

AISC CERTIFIED FABRICATOR

DESCRIPTION	DATE	DATE	JOB No.
ANGLE	05/17/2011		70234
	DRAWN BY TMc	CHECKED BY TAN	DRG No. A29

PHASE				
1	2	3	4	5
3	0	0	0	0

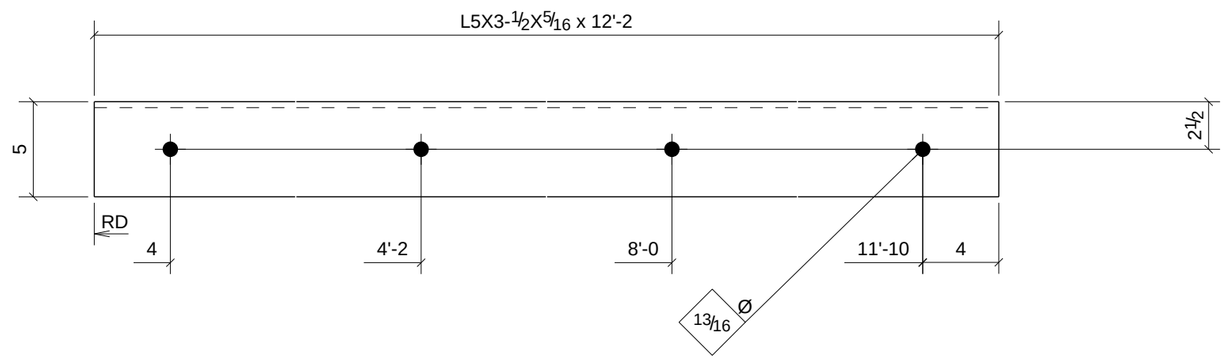

PROCESS CONTROL
PROCESS BY
FAB: _____
FIT AND WELD: _____
INSPECTION: _____
OTHER (IF NEEDED) _____
_____ : _____
_____ : _____
_____ : _____
_____ : _____
REFERENCE LATEST ERECTION DRAWINGS FOR MATERIAL & FABRICATION INFORMATION

3 - ANGLES - A30

DATE	NO.	DESCRIPTION	BY
5/28/11	B	For Checking	TMc
5/16/11	A	For Approval	TMc

BILL OF MATERIAL

Qty Ea.	Qty Tot	Piece Mark	Description	Length	Weight Total	Remarks	Adv Mill #	Steel Grade
	3	A30	ANGLES					
	3		L5X3-1/2X5/16	12'-2"	318	SQ-2		A36

STEEL ASTM	A992	UNO
ELECTRODES	E70XX L.H.	UNO
WELDS	1/4" FILLET	UNO
OPEN HOLES	13/16" UNO	FINISH PER SPECS
BOLTS	3/4" A325N	UNO
PAINT	1 S/C STD PRIMER U.N.O.	UNO

PROJECT NAME
OLDE ORCHARD ELEMENTARY SCHOOL

LOCATION
800 McNAUGHTEN RD. COLUMBUS, OHIO 43213

CONTRACTOR
THOMAS AND MARKER CONSTRUCTION

ARCHITECT
BRAUN & STEIDL

North Central Fabrication, Ltd.

NORTH CENTRAL FABRICATION
Mansfield, OH 44906
419-529-2744 FAX 419-529-5387 http://www.northcentralfab

AISC CERTIFIED FABRICATOR

DESCRIPTION	DATE	DATE	JOB No.
ANGLE	05/17/2011		70234
	DRAWN BY TMc	CHECKED BY TAN	DRG No. A30

PHASE				
1	2	3	4	5
1	0	0	0	0

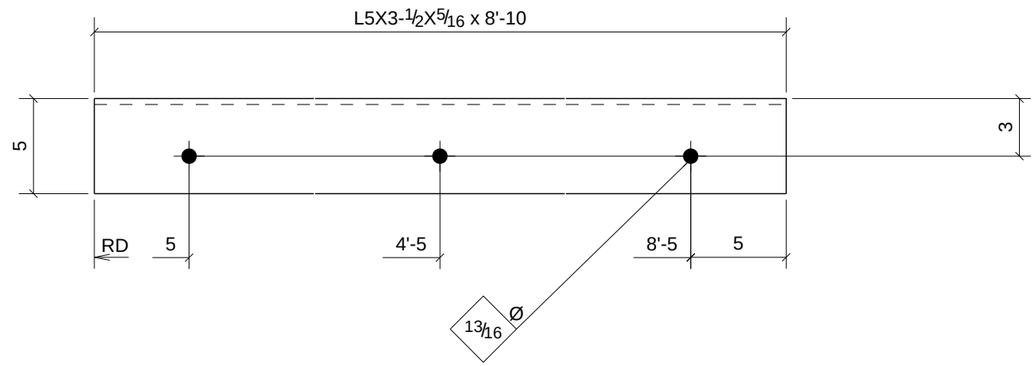

PROCESS CONTROL
PROCESS BY
FAB: _____
FIT AND WELD: _____
INSPECTION: _____
OTHER (IF NEEDED) _____
_____ : _____
_____ : _____
_____ : _____
_____ : _____
REFERENCE LATEST ERECTION DRAWINGS FOR MATERIAL & FABRICATION INFORMATION

ONE - ANGLE - A31

DATE	NO.	DESCRIPTION	BY
5/28/11	B	For Checking	TMc
5/16/11	A	For Approval	TMc

BILL OF MATERIAL

Qty Ea.	Qty Tot	Piece Mark	Description	Length	Weight Total	Remarks	Adv Mill #	Steel Grade
	1	A31	ANGLE					
	1		L5X3-1/2X5/16	8'-10"	77	SQ-2		A36

STEEL ASTM	A992	UNO
ELECTRODES	E70XX L.H.	UNO
WELDS	1/4" FILLET	UNO
OPEN HOLES	13/16" UNO	FINISH PER SPECS
BOLTS	3/4" A325N	UNO
PAINT	1 S/C STD PRIMER U.N.O.	UNO

PROJECT NAME
OLDE ORCHARD ELEMENTARY SCHOOL

LOCATION
800 McNAUGHTEN RD. COLUMBUS, OHIO 43213

CONTRACTOR
THOMAS AND MARKER CONSTRUCTION

ARCHITECT
BRAUN & STEIDL

North Central Fabrication, Ltd.

NORTH CENTRAL FABRICATION
Mansfield, OH 44906
419-529-2744 FAX 419-529-5387 http://www.northcentralfab

AISC CERTIFIED FABRICATOR

DESCRIPTION	DATE	DATE	JOB No.
ANGLE	05/17/2011		70234
	DRAWN BY TMc	CHECKED BY TAN	DRG No. A31

PHASE				
1	2	3	4	5
1	0	0	0	0

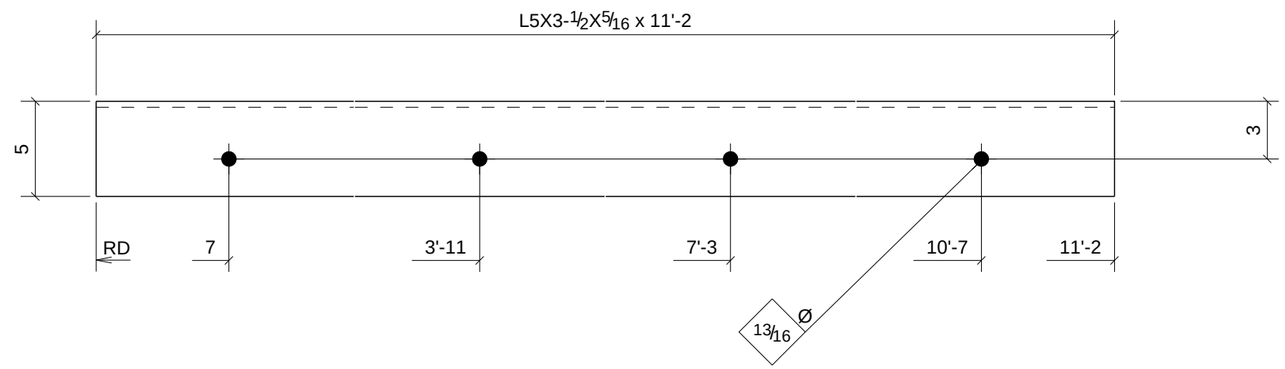

PROCESS CONTROL
PROCESS BY
FAB: _____
FIT AND WELD: _____
INSPECTION: _____
OTHER (IF NEEDED) _____
_____ : _____
_____ : _____
_____ : _____
_____ : _____
REFERENCE LATEST ERECTION DRAWINGS FOR MATERIAL & FABRICATION INFORMATION

ONE - ANGLE - A32

DATE	NO.	DESCRIPTION	BY
5/28/11	B	For Checking	TMc
5/16/11	A	For Approval	TMc

BILL OF MATERIAL

Qty Ea.	Qty Tot	Piece Mark	Description	Length	Weight Total	Remarks	Adv Mill #	Steel Grade
	1	A32	ANGLE					
	1		L5X3-1/2X5/16	11'-2"	97	SQ-2		A36

STEEL ASTM	A992	UNO
ELECTRODES	E70XX L.H.	UNO
WELDS	1/4" FILLET	UNO
OPEN HOLES	13/16" UNO	FINISH PER SPECS
BOLTS	3/4" A325N	UNO
PAINT	1 S/C STD PRIMER U.N.O.	UNO

PROJECT NAME
OLDE ORCHARD ELEMENTARY SCHOOL

LOCATION
800 McNAUGHTEN RD. COLUMBUS, OHIO 43213

CONTRACTOR
THOMAS AND MARKER CONSTRUCTION

ARCHITECT
BRAUN & STEIDL

North Central Fabrication, Ltd.

NORTH CENTRAL FABRICATION
Mansfield, OH 44906
419-529-2744 FAX 419-529-5387 http://www.northcentralfab

AISC CERTIFIED FABRICATOR

DESCRIPTION	DATE	DATE	JOB No.
ANGLE	05/17/2011		70234
	DRAWN BY TMc	CHECKED BY TAN	DRG No. A32

PHASE				
1	2	3	4	5
3	0	0	0	0

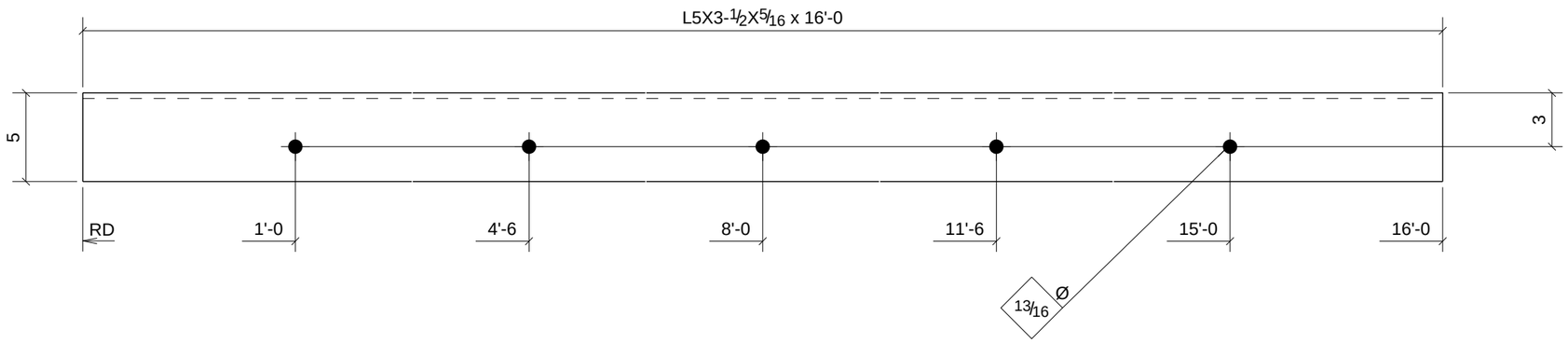

PROCESS CONTROL
PROCESS BY
FAB: _____
FIT AND WELD: _____
INSPECTION: _____
OTHER (IF NEEDED) _____
_____ : _____
_____ : _____
_____ : _____
_____ : _____
REFERENCE LATEST ERECTION DRAWINGS FOR MATERIAL & FABRICATION INFORMATION

3 - ANGLES - A33

DATE	NO.	DESCRIPTION	BY
5/28/11	B	For Checking	TMc
5/16/11	A	For Approval	TMc

BILL OF MATERIAL

Qty Ea.	Qty Tot	Piece Mark	Description	Length	Weight Total	Remarks	Adv Mill #	Steel Grade
	3	A33	ANGLES					
	3		L5X3-1/2X5/16	16'-0"	418	SQ-2		A36

STEEL ASTM	A992		UNO
ELECTRODES	E70XX L.H.		UNO
WELDS	1/4" FILLET		UNO
OPEN HOLES	13/16"	UNO	FINISH PER SPECS
BOLTS	3/4" A325N		UNO
PAINT	1 S/C STD PRIMER U.N.O.		UNO

PROJECT NAME
OLDE ORCHARD ELEMENTARY SCHOOL

LOCATION
800 McNAUGHTEN RD. COLUMBUS, OHIO 43213

CONTRACTOR
THOMAS AND MARKER CONSTRUCTION

ARCHITECT
BRAUN & STEIDL

North Central Fabrication, Ltd.
NORTH CENTRAL FABRICATION
Mansfield, OH 44906
419-529-2744 FAX 419-529-5387 http://www.northcentralfab
AISC CERTIFIED FABRICATOR

DESCRIPTION	DATE	DATE	JOB No.
ANGLE	05/17/2011		70234
	DRAWN BY TMc	CHECKED BY TAN	DRG No. A33

PHASE				
1	2	3	4	5
17	0	0	0	0

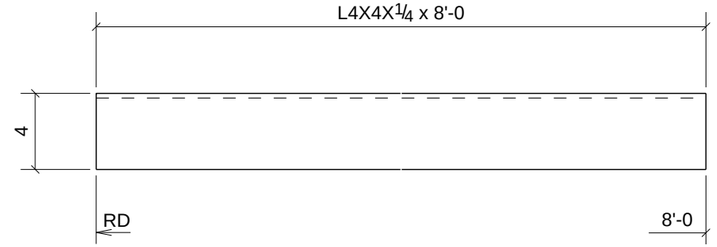

PROCESS CONTROL
PROCESS BY
FAB: _____
FIT AND WELD: _____
INSPECTION: _____
OTHER (IF NEEDED) _____
_____ : _____
_____ : _____
_____ : _____
_____ : _____
REFERENCE LATEST ERECTION DRAWINGS FOR MATERIAL & FABRICATION INFORMATION

17 - ANGLES - A34

DATE	NO.	DESCRIPTION	BY
5/28/11	B	For Checking	TMc
5/16/11	A	For Approval	TMc

BILL OF MATERIAL

Qty Ea.	Qty Tot	Piece Mark	Description	Length	Weight Total	Remarks	Adv Mill #	Steel Grade
	17	A34	ANGLES					
	17		L4X4X1/4	8'-0"	898	SQ-2		A36

STEEL ASTM	A992	UNO
ELECTRODES	E70XX L.H.	UNO
WELDS	1/4" FILLET	UNO
OPEN HOLES	13/16" UNO	FINISH PER SPECS
BOLTS	3/4" A325N	UNO
PAINT	1 S/C STD PRIMER U.N.O.	UNO

PROJECT NAME
OLDE ORCHARD ELEMENTARY SCHOOL

LOCATION
800 McNAUGHTEN RD. COLUMBUS, OHIO 43213

CONTRACTOR
THOMAS AND MARKER CONSTRUCTION

ARCHITECT
BRAUN & STEIDL

North Central Fabrication, Ltd.

NORTH CENTRAL FABRICATION
Mansfield, OH 44906
419-529-2744 FAX 419-529-5387 http://www.northcentralfab

AISC CERTIFIED FABRICATOR

DESCRIPTION	DATE	DATE	JOB No.
ANGLE	05/18/2011		70234
	DRAWN BY TMc	CHECKED BY TAN	DRG No. A34

PHASE				
1	2	3	4	5
1	0	0	0	0

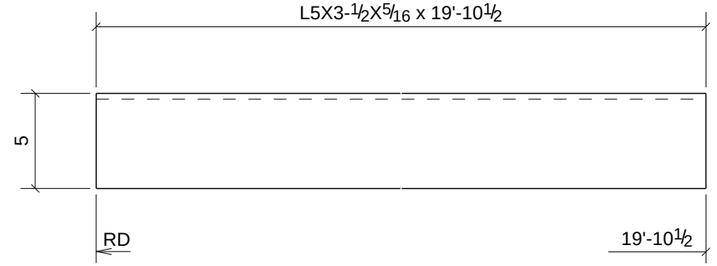

PROCESS CONTROL
PROCESS BY
FAB: _____
FIT AND WELD: _____
INSPECTION: _____
OTHER (IF NEEDED) _____
_____ : _____
_____ : _____
_____ : _____
_____ : _____
_____ : _____
REFERENCE LATEST ERECTION DRAWINGS FOR MATERIAL & FABRICATION INFORMATION

ONE - ANGLE - A35

DATE	NO.	DESCRIPTION	BY
5/28/11	B	For Checking	TMc
5/16/11	A	For Approval	TMc

BILL OF MATERIAL

Qty Ea.	Qty Tot	Piece Mark	Description	Length	Weight Total	Remarks	Adv Mill #	Steel Grade
	1	A35	ANGLE					
	1		L5X3-1/2X5/16	19'-10 1/2"	173	SQ-2		A36

STEEL ASTM	A992	UNO
ELECTRODES	E70XX L.H.	UNO
WELDS	1/4" FILLET	UNO
OPEN HOLES	13/16" UNO	FINISH PER SPECS
BOLTS	3/4" A325N	UNO
PAINT	1 S/C STD PRIMER U.N.O.	UNO

PROJECT NAME
OLDE ORCHARD ELEMENTARY SCHOOL

LOCATION
800 McNAUGHTEN RD. COLUMBUS, OHIO 43213

CONTRACTOR
THOMAS AND MARKER CONSTRUCTION

ARCHITECT
BRAUN & STEIDL

North Central Fabrication, Ltd.
NORTH CENTRAL FABRICATION
Mansfield, OH 44906
419-529-2744 FAX 419-529-5387 http://www.northcentralfab
AISC CERTIFIED FABRICATOR

DESCRIPTION	DATE	DATE	JOB No.
ANGLE	05/18/2011		70234
	DRAWN BY TMc	CHECKED BY TAN	DRG No. A35

PHASE				
1	2	3	4	5
1	0	0	0	0

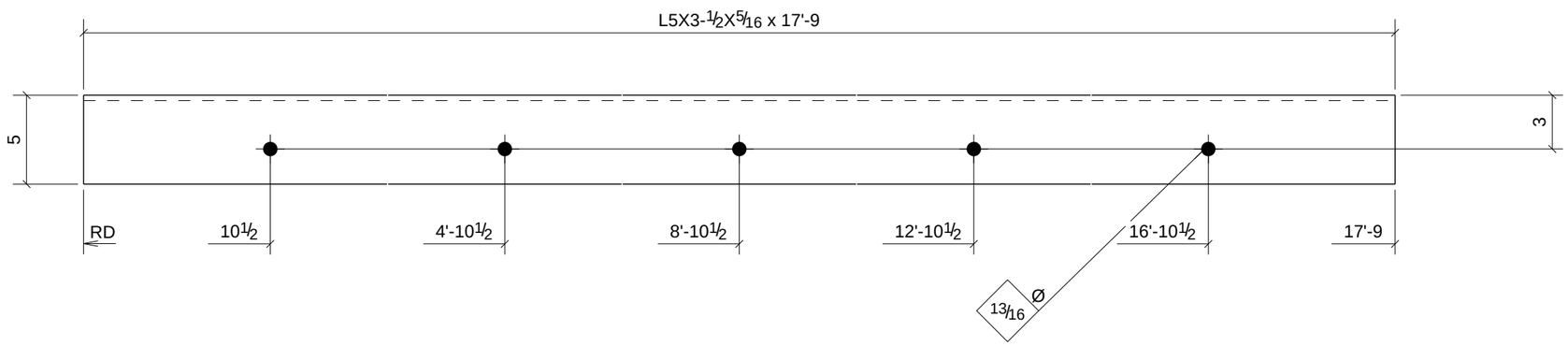

PROCESS CONTROL
PROCESS BY
FAB: _____
FIT AND WELD: _____
INSPECTION: _____
OTHER (IF NEEDED) _____
_____ : _____
_____ : _____
_____ : _____
_____ : _____
REFERENCE LATEST ERECTION DRAWINGS FOR MATERIAL & FABRICATION INFORMATION

ONE - ANGLE - A36

DATE	NO.	DESCRIPTION	BY
5/28/11	B	For Checking	TMc
5/16/11	A	For Approval	TMc

BILL OF MATERIAL

Qty Ea.	Qty Tot	Piece Mark	Description	Length	Weight Total	Remarks	Adv Mill #	Steel Grade
	1	A36	ANGLE					
	1		L5X3-1/2X5/16	17'-9"	155	SQ-2		A36

STEEL ASTM	A992	UNO
ELECTRODES	E70XX L.H.	UNO
WELDS	1/4" FILLET	UNO
OPEN HOLES	13/16" UNO	FINISH PER SPECS
BOLTS	3/4" A325N	UNO
PAINT	1 S/C STD PRIMER U.N.O.	UNO

PROJECT NAME
OLDE ORCHARD ELEMENTARY SCHOOL

LOCATION
800 McNAUGHTEN RD. COLUMBUS, OHIO 43213

CONTRACTOR
THOMAS AND MARKER CONSTRUCTION

ARCHITECT
BRAUN & STEIDL

North Central Fabrication, Ltd.

NORTH CENTRAL FABRICATION
Mansfield, OH 44906
419-529-2744 FAX 419-529-5387 http://www.northcentralfab

AISC CERTIFIED FABRICATOR

DESCRIPTION	DATE	DATE	JOB No.
ANGLE	05/17/2011		70234
	DRAWN BY TMc	CHECKED BY TAN	DRG No. A36

PHASE				
1	2	3	4	5
1	0	0	0	0

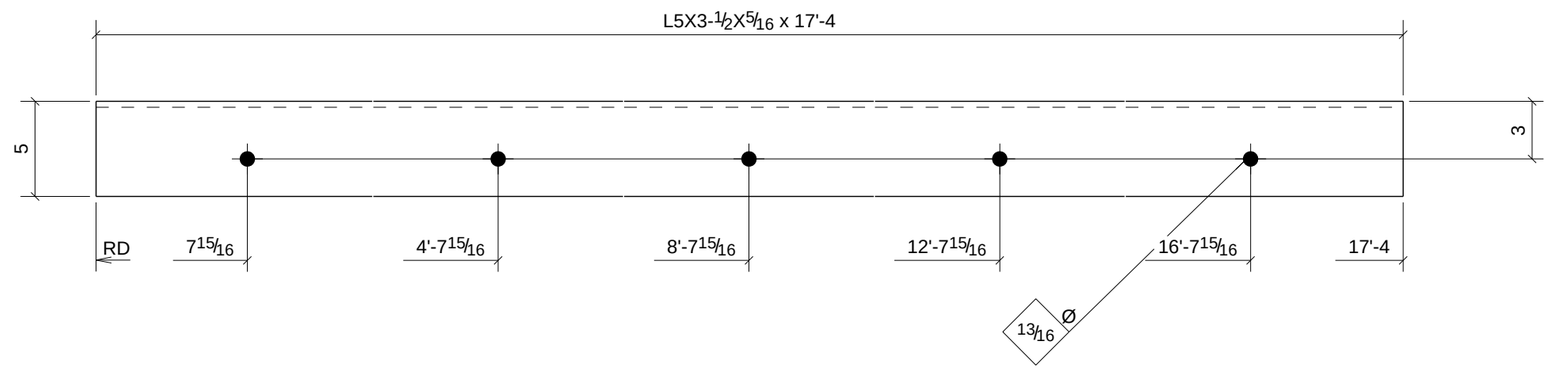

PROCESS CONTROL
PROCESS BY
FAB: _____
FIT AND WELD: _____
INSPECTION: _____
OTHER (IF NEEDED) _____
_____ : _____
_____ : _____
_____ : _____
_____ : _____
REFERENCE LATEST ERECTION DRAWINGS FOR MATERIAL & FABRICATION INFORMATION

ONE - ANGLE - A37

DATE	NO.	DESCRIPTION	BY
5/28/11	B	For Checking	TMc
5/16/11	A	For Approval	TMc

BILL OF MATERIAL

Qty Ea.	Qty Tot	Piece Mark	Description	Length	Weight Total	Remarks	Adv Mill #	Steel Grade
	1	A37	ANGLE					
	1		L5X3-1/2X5/16	17'-4"	151	SQ-2		A36

STEEL ASTM	A992	UNO
ELECTRODES	E70XX L.H.	UNO
WELDS	1/4" FILLET	UNO
OPEN HOLES	13/16" UNO	FINISH PER SPECS
BOLTS	3/4" A325N	UNO
PAINT	1 S/C STD PRIMER U.N.O.	UNO

PROJECT NAME
OLDE ORCHARD ELEMENTARY SCHOOL

LOCATION
800 McNAUGHTEN RD. COLUMBUS, OHIO 43213

CONTRACTOR
THOMAS AND MARKER CONSTRUCTION

ARCHITECT
BRAUN & STEIDL

North Central Fabrication, Ltd.
NORTH CENTRAL FABRICATION
Mansfield, OH 44906
419-529-2744 FAX 419-529-5387 http://www.northcentralfab
AISC CERTIFIED FABRICATOR

DESCRIPTION	DATE	DATE	JOB No.
ANGLE	05/17/2011		70234
	DRAWN BY TMc	CHECKED BY TAN	DRG No. A37

PHASE				
1	2	3	4	5
1	0	0	0	0

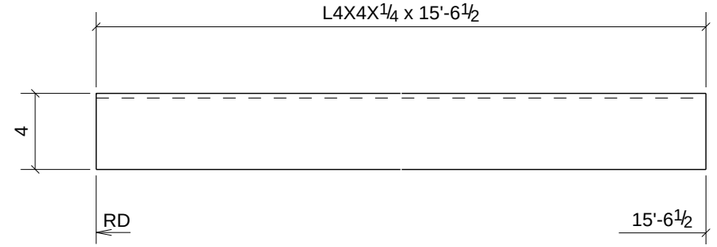

PROCESS CONTROL
PROCESS BY
FAB: _____
FIT AND WELD: _____
INSPECTION: _____
OTHER (IF NEEDED) _____
_____ : _____
_____ : _____
_____ : _____
_____ : _____
REFERENCE LATEST ERECTION DRAWINGS FOR MATERIAL & FABRICATION INFORMATION

ONE - ANGLE - A38

DATE	NO.	DESCRIPTION	BY
5/28/11	B	For Checking	TMc
5/16/11	A	For Approval	TMc

BILL OF MATERIAL

Qty Ea.	Qty Tot	Piece Mark	Description	Length	Weight Total	Remarks	Adv Mill #	Steel Grade
	1	A38	ANGLE					
	1		L4X4X1/4	15'-6 1/2"	103	SQ-2		A36

STEEL ASTM	A992	UNO
ELECTRODES	E70XX L.H.	UNO
WELDS	1/4" FILLET	UNO
OPEN HOLES	13/16" UNO	FINISH PER SPECS
BOLTS	3/4" A325N	UNO
PAINT	1 S/C STD PRIMER U.N.O.	UNO

PROJECT NAME
OLDE ORCHARD ELEMENTARY SCHOOL

LOCATION
800 McNAUGHTEN RD. COLUMBUS, OHIO 43213

CONTRACTOR
THOMAS AND MARKER CONSTRUCTION

ARCHITECT
BRAUN & STEIDL

North Central Fabrication, Ltd.
NORTH CENTRAL FABRICATION
Mansfield, OH 44906
419-529-2744 FAX 419-529-5387 http://www.northcentralfab
AISC CERTIFIED FABRICATOR

DESCRIPTION	DATE	DATE	JOB No.
ANGLE	05/18/2011		70234
	DRAWN BY TMc	CHECKED BY TAN	DRG No. A38

PHASE				
1	2	3	4	5
1	0	0	0	0

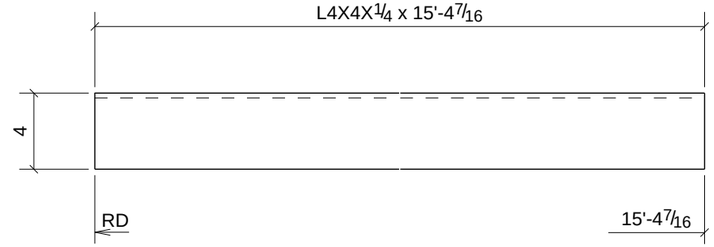

PROCESS CONTROL
PROCESS BY
FAB: _____
FIT AND WELD: _____
INSPECTION: _____
OTHER (IF NEEDED) _____
_____ : _____
_____ : _____
_____ : _____
_____ : _____
REFERENCE LATEST ERECTION DRAWINGS FOR MATERIAL & FABRICATION INFORMATION

ONE - ANGLE - A40

DATE	NO.	DESCRIPTION	BY
5/28/11	B	For Checking	TMc
5/16/11	A	For Approval	TMc

BILL OF MATERIAL

Qty Ea.	Qty Tot	Piece Mark	Description	Length	Weight Total	Remarks	Adv Mill #	Steel Grade
	1	A40	ANGLE					
	1		L4X4X1/4	15'-4 7/16"	101	SQ-2		A36

STEEL ASTM	A992	UNO
ELECTRODES	E70XX L.H.	UNO
WELDS	1/4" FILLET	UNO
OPEN HOLES	13/16" UNO	FINISH PER SPECS
BOLTS	3/4" A325N	UNO
PAINT	1 S/C STD PRIMER U.N.O.	UNO

PROJECT NAME
OLDE ORCHARD ELEMENTARY SCHOOL

LOCATION
800 McNAUGHTEN RD. COLUMBUS, OHIO 43213

CONTRACTOR
THOMAS AND MARKER CONSTRUCTION

ARCHITECT
BRAUN & STEIDL

North Central Fabrication, Ltd.
NORTH CENTRAL FABRICATION
Mansfield, OH 44906
419-529-2744 FAX 419-529-5387 http://www.northcentralfab
AISC CERTIFIED FABRICATOR

DESCRIPTION	DATE	DATE	JOB No.
ANGLE	05/18/2011		70234
	DRAWN BY TMc	CHECKED BY TAN	DRG No. A40

PHASE				
1	2	3	4	5
14	0	0	0	0

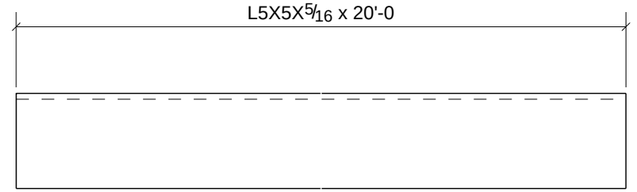

PROCESS CONTROL
PROCESS BY
FAB: _____
FIT AND WELD: _____
INSPECTION: _____
OTHER (IF NEEDED) _____
_____ : _____
_____ : _____
_____ : _____
_____ : _____
REFERENCE LATEST ERECTION DRAWINGS FOR MATERIAL & FABRICATION INFORMATION

14 - ANGLES - A41

DATE	NO.	DESCRIPTION	BY
5/28/11	B	For Checking	TMc
5/16/11	A	For Approval	TMc

BILL OF MATERIAL

Qty Ea.	Qty Tot	Piece Mark	Description	Length	Weight Total	Remarks	Adv Mill #	Steel Grade
	14	A41	ANGLES					
	14		L5X5X5/16	20'-0"	2887	SQ-2		A36

STEEL ASTM	A992	UNO
ELECTRODES	E70XX L.H.	UNO
WELDS	1/4" FILLET	UNO
OPEN HOLES	13/16" UNO	FINISH PER SPECS
BOLTS	3/4" A325N	UNO
PAINT	1 S/C STD PRIMER U.N.O.	UNO

PROJECT NAME
OLDE ORCHARD ELEMENTARY SCHOOL

LOCATION
800 McNAUGHTEN RD. COLUMBUS, OHIO 43213

CONTRACTOR
THOMAS AND MARKER CONSTRUCTION

ARCHITECT
BRAUN & STEIDL

North Central Fabrication, Ltd.
NORTH CENTRAL FABRICATION
Mansfield, OH 44906
419-529-2744 FAX 419-529-5387 http://www.northcentralfab

AISC CERTIFIED FABRICATOR

DESCRIPTION	DATE	DATE	JOB No.
ANGLE	05/18/2011		70234
	DRAWN BY TMc	CHECKED BY TAN	DRG No. A41

PHASE				
1	2	3	4	5
1	0	0	0	0

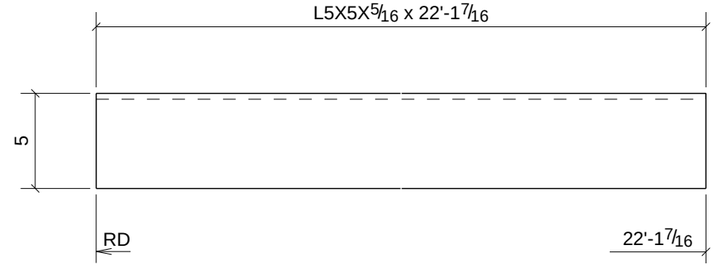

PROCESS CONTROL
PROCESS BY
FAB: _____
FIT AND WELD: _____
INSPECTION: _____
OTHER (IF NEEDED) _____
_____ : _____
_____ : _____
_____ : _____
_____ : _____
REFERENCE LATEST ERECTION DRAWINGS FOR MATERIAL & FABRICATION INFORMATION

ONE - ANGLE - A42

DATE	NO.	DESCRIPTION	BY
5/28/11	B	For Checking	TMc
5/16/11	A	For Approval	TMc

BILL OF MATERIAL

Qty Ea.	Qty Tot	Piece Mark	Description	Length	Weight Total	Remarks	Adv Mill #	Steel Grade
	1	A42	ANGLE					
	1		L5X5X5/16	22'-1 7/16"	228	SQ-2		A36

STEEL ASTM	A992	UNO
ELECTRODES	E70XX L.H.	UNO
WELDS	1/4" FILLET	UNO
OPEN HOLES	13/16" UNO	FINISH PER SPECS
BOLTS	3/4" A325N	UNO
PAINT	1 S/C STD PRIMER U.N.O.	UNO

PROJECT NAME
OLDE ORCHARD ELEMENTARY SCHOOL

LOCATION
800 McNAUGHTEN RD. COLUMBUS, OHIO 43213

CONTRACTOR
THOMAS AND MARKER CONSTRUCTION

ARCHITECT
BRAUN & STEIDL

North Central Fabrication, Ltd.

NORTH CENTRAL FABRICATION
Mansfield, OH 44906
419-529-2744 FAX 419-529-5387 http://www.northcentralfab

AISC CERTIFIED FABRICATOR

DESCRIPTION	DATE	DATE	JOB No.
ANGLE	05/18/2011		70234
	DRAWN BY TMc	CHECKED BY TAN	DRG No. A42

PHASE				
1	2	3	4	5
1	0	0	0	0

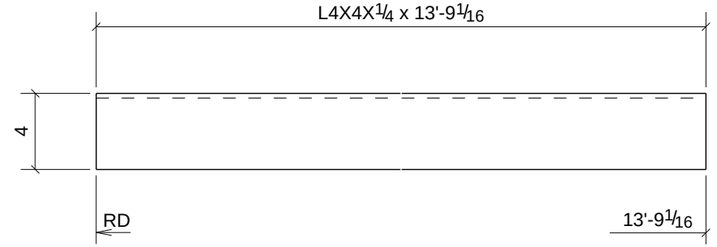

PROCESS CONTROL
PROCESS BY
FAB: _____
FIT AND WELD: _____
INSPECTION: _____
OTHER (IF NEEDED) _____
_____ : _____
_____ : _____
_____ : _____
_____ : _____
REFERENCE LATEST ERECTION DRAWINGS FOR MATERIAL & FABRICATION INFORMATION

ONE - ANGLE - A43

DATE	NO.	DESCRIPTION	BY
5/28/11	B	For Checking	TMc
5/16/11	A	For Approval	TMc

BILL OF MATERIAL

Qty Ea.	Qty Tot	Piece Mark	Description	Length	Weight Total	Remarks	Adv Mill #	Steel Grade
	1	A43	ANGLE					
	1		L4X4X1/4	13'-9 1/16"	91	SQ-2		A36

STEEL ASTM	A992	UNO
ELECTRODES	E70XX L.H.	UNO
WELDS	1/4" FILLET	UNO
OPEN HOLES	13/16" UNO	FINISH PER SPECS
BOLTS	3/4" A325N	UNO
PAINT	1 S/C STD PRIMER U.N.O.	UNO

PROJECT NAME
OLDE ORCHARD ELEMENTARY SCHOOL

LOCATION
800 McNAUGHTEN RD. COLUMBUS, OHIO 43213

CONTRACTOR
THOMAS AND MARKER CONSTRUCTION

ARCHITECT
BRAUN & STEIDL

North Central Fabrication, Ltd.
NORTH CENTRAL FABRICATION
Mansfield, OH 44906
419-529-2744 FAX 419-529-5387 http://www.northcentralfab

AISC CERTIFIED FABRICATOR

DESCRIPTION	DATE	DATE	JOB No.
ANGLE	05/18/2011		70234
	DRAWN BY TMc	CHECKED BY TAN	DRG No. A43

PHASE				
1	2	3	4	5
1	0	0	0	0

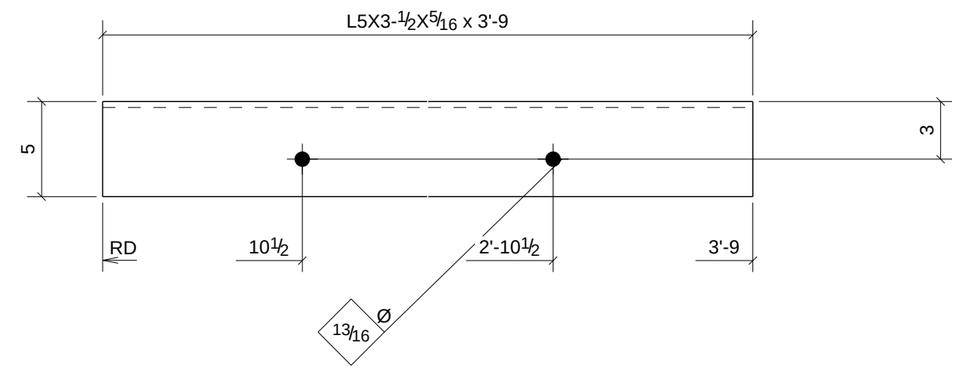

PROCESS CONTROL
PROCESS BY
FAB: _____
FIT AND WELD: _____
INSPECTION: _____
OTHER (IF NEEDED)
_____ : _____
_____ : _____
_____ : _____
_____ : _____
REFERENCE LATEST ERECTION DRAWINGS FOR MATERIAL & FABRICATION INFORMATION

ONE - ANGLE - A45

DATE	NO.	DESCRIPTION	BY
5/28/11	B	For Checking	TMc
5/16/11	A	For Approval	TMc

BILL OF MATERIAL

Qty Ea.	Qty Tot	Piece Mark	Description	Length	Weight Total	Remarks	Adv Mill #	Steel Grade
	1	A45	ANGLE					
	1		L5X3-1/2X5/16	3'-9"	33	SQ-2		A36

STEEL ASTM	A992	UNO
ELECTRODES	E70XX L.H.	UNO
WELDS	1/4" FILLET	UNO
OPEN HOLES	13/16" UNO	FINISH PER SPECS
BOLTS	3/4" A325N	UNO
PAINT	1 S/C STD PRIMER U.N.O.	UNO

PROJECT NAME
OLDE ORCHARD ELEMENTARY SCHOOL

LOCATION
800 McNAUGHTEN RD. COLUMBUS, OHIO 43213

CONTRACTOR
THOMAS AND MARKER CONSTRUCTION

ARCHITECT
BRAUN & STEIDL

North Central Fabrication, Ltd.
NORTH CENTRAL FABRICATION
Mansfield, OH 44906
419-529-2744 FAX 419-529-5387 http://www.northcentralfab
AISC CERTIFIED FABRICATOR

DESCRIPTION	DATE	DATE	JOB No.
ANGLE	05/17/2011		70234
	DRAWN BY TMc	CHECKED BY TAN	DRG No. A45

PHASE				
1	2	3	4	5
1	0	0	0	0

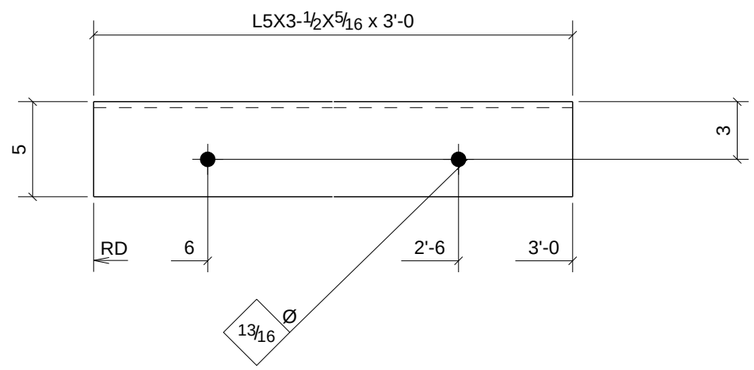

PROCESS CONTROL
PROCESS BY
FAB: _____
FIT AND WELD: _____
INSPECTION: _____
OTHER (IF NEEDED) _____
_____ : _____
_____ : _____
_____ : _____
_____ : _____
REFERENCE LATEST ERECTION DRAWINGS FOR MATERIAL & FABRICATION INFORMATION

ONE - ANGLE - A46

DATE	NO.	DESCRIPTION	BY
5/28/11	B	For Checking	TMc
5/16/11	A	For Approval	TMc

BILL OF MATERIAL

Qty Ea.	Qty Tot	Piece Mark	Description	Length	Weight Total	Remarks	Adv Mill #	Steel Grade
	1	A46	ANGLE					
	1		L5X3-1/2X5/16	3'-0"	26	SQ-2		A36

STEEL ASTM	A992		UNO
ELECTRODES	E70XX L.H.		UNO
WELDS	1/4" FILLET		UNO
OPEN HOLES	13/16"	UNO	FINISH PER SPECS
BOLTS	3/4" A325N		UNO
PAINT	1 S/C STD PRIMER U.N.O.		UNO

PROJECT NAME
OLDE ORCHARD ELEMENTARY SCHOOL

LOCATION
800 McNAUGHTEN RD. COLUMBUS, OHIO 43213

CONTRACTOR
THOMAS AND MARKER CONSTRUCTION

ARCHITECT
BRAUN & STEIDL

North Central Fabrication, Ltd.
NORTH CENTRAL FABRICATION
Mansfield, OH 44906
419-529-2744 FAX 419-529-5387 http://www.northcentralfab
AISC CERTIFIED FABRICATOR

DESCRIPTION	DATE	DATE	JOB No.
ANGLE	05/17/2011		70234
	DRAWN BY TMc	CHECKED BY TAN	DRG No. A46

GRID LOCATION	BOTTOM ELEVATION
G/5	111'-8"9/16
F/5	111'-8"9/16
F/5	111'-8"9/16
E/5	111'-8"9/16
E/5	111'-8"9/16
D/5	111'-8"9/16
F.9/5	111'-8"9/16

PHASE				
1	2	3	4	5
7	0	0	0	0

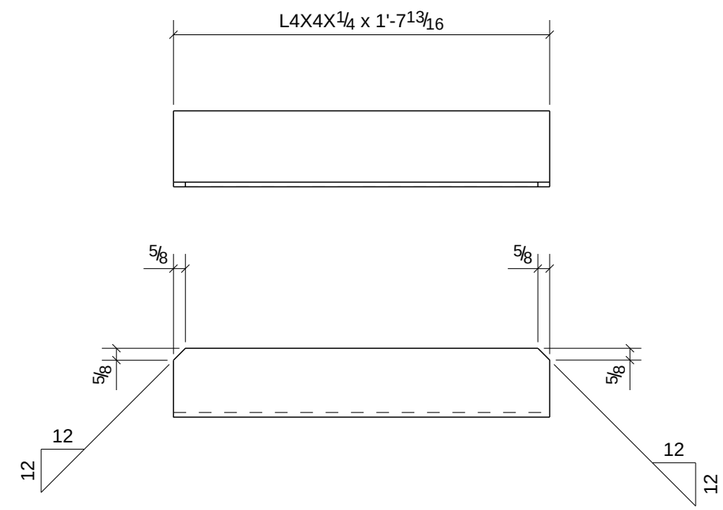

7 - ANGLES - A47

PROCESS CONTROL
PROCESS BY
FAB: _____
FIT AND WELD: _____
INSPECTION: _____
OTHER (IF NEEDED) _____
_____ : _____
_____ : _____
_____ : _____
_____ : _____
REFERENCE LATEST ERECTION DRAWINGS FOR MATERIAL & FABRICATION INFORMATION

DATE	NO.	DESCRIPTION	BY
5/28/11	B	For Checking	TMc
5/16/11	A	For Approval	TMc

BILL OF MATERIAL

Qty Ea.	Qty Tot	Piece Mark	Description	Length	Weight Total	Remarks	Adv Mill #	Steel Grade
	7	A47	ANGLES					
	7		L4X4X1/4	1'-7 13/16"	76	SQ-2		A36

STEEL ASTM	A992	UNO
ELECTRODES	E70XX L.H.	UNO
WELDS	1/4" FILLET	UNO
OPEN HOLES	13/16" UNO	FINISH PER SPECS
BOLTS	3/4" A325N	UNO
PAINT	1 S/C STD PRIMER U.N.O.	UNO

PROJECT NAME
OLDE ORCHARD ELEMENTARY SCHOOL

LOCATION
800 McNAUGHTEN RD. COLUMBUS, OHIO 43213

CONTRACTOR
THOMAS AND MARKER CONSTRUCTION

ARCHITECT
BRAUN & STEIDL

North Central Fabrication, Ltd.
NORTH CENTRAL FABRICATION
Mansfield, OH 44906
419-529-2744 FAX 419-529-5387 http://www.northcentralfab
AISC CERTIFIED FABRICATOR

DESCRIPTION	DATE	DATE	JOB No.
ANGLE	05/18/2011		70234
	DRAWN BY TMc	CHECKED BY TAN	DRG No. A47

PHASE				
1	2	3	4	5
1	0	0	0	0

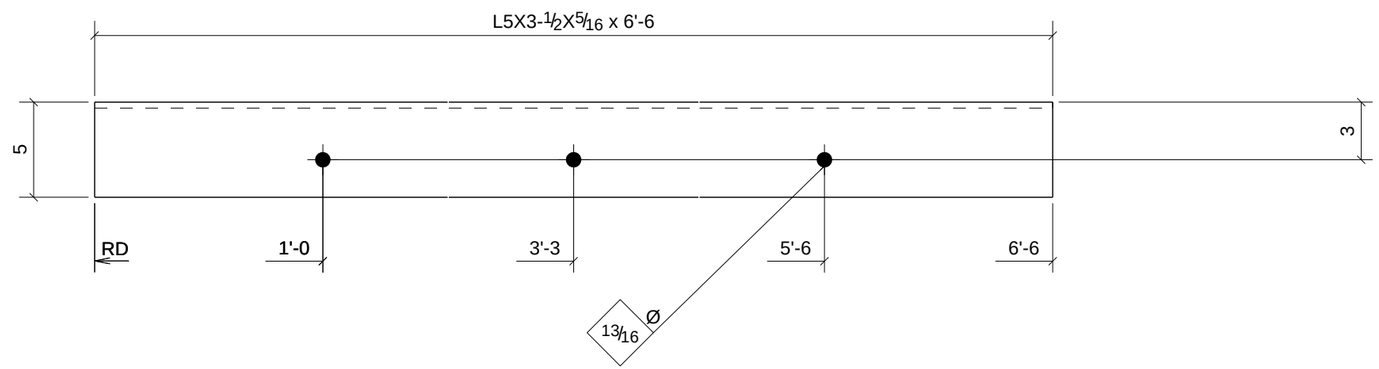

PROCESS CONTROL
PROCESS BY
FAB: _____
FIT AND WELD: _____
INSPECTION: _____
OTHER (IF NEEDED)
_____ : _____
_____ : _____
_____ : _____
_____ : _____
_____ : _____
REFERENCE LATEST ERECTION DRAWINGS FOR MATERIAL & FABRICATION INFORMATION

ONE - ANGLE - A48

DATE	NO.	DESCRIPTION	BY
5/28/11	B	For Checking	TMc
5/16/11	A	For Approval	TMc

BILL OF MATERIAL

Qty Ea.	Qty Tot	Piece Mark	Description	Length	Weight Total	Remarks	Adv Mill #	Steel Grade
	1	A48	ANGLE					
	1		L5X3-1/2X5/16	6'-6"	57	SQ-2		A36

STEEL ASTM	A992	UNO
ELECTRODES	E70XX L.H.	UNO
WELDS	1/4" FILLET	UNO
OPEN HOLES	13/16" UNO	FINISH PER SPECS
BOLTS	3/4" A325N	UNO
PAINT	1 S/C STD PRIMER U.N.O.	UNO

PROJECT NAME
OLDE ORCHARD ELEMENTARY SCHOOL

LOCATION
800 McNAUGHTEN RD. COLUMBUS, OHIO 43213

CONTRACTOR
THOMAS AND MARKER CONSTRUCTION

ARCHITECT
BRAUN & STEIDL

North Central Fabrication, Ltd.
NORTH CENTRAL FABRICATION
Mansfield, OH 44906
419-529-2744 FAX 419-529-5387 http://www.northcentralfab
AISC CERTIFIED FABRICATOR

DESCRIPTION	DATE	DATE	JOB No.
ANGLE	05/17/2011		70234
	DRAWN BY TMc	CHECKED BY TAN	DRG No. A48

PHASE				
1	2	3	4	5
4	0	0	0	0

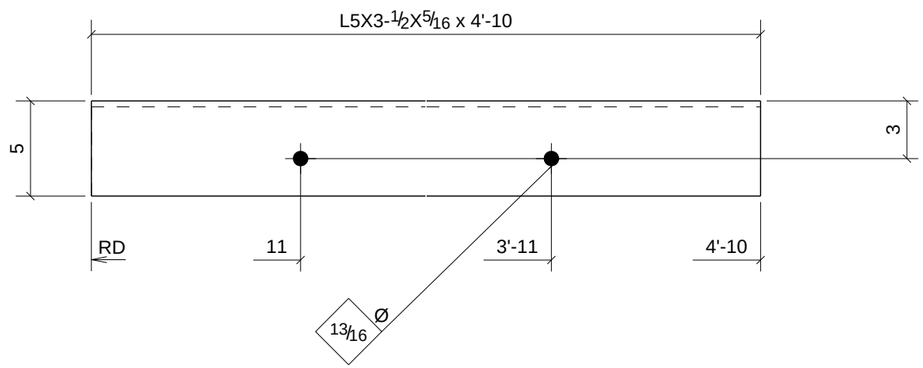

PROCESS CONTROL
PROCESS BY
FAB: _____
FIT AND WELD: _____
INSPECTION: _____
OTHER (IF NEEDED) _____
_____ : _____
_____ : _____
_____ : _____
_____ : _____
REFERENCE LATEST ERECTION DRAWINGS FOR MATERIAL & FABRICATION INFORMATION

4 - ANGLES - A49

DATE	NO.	DESCRIPTION	BY
5/28/11	B	For Checking	TMc
5/16/11	A	For Approval	TMc

BILL OF MATERIAL

Qty Ea.	Qty Tot	Piece Mark	Description	Length	Weight Total	Remarks	Adv Mill #	Steel Grade
	4	A49	ANGLES					
	4		L5X3-1/2X5/16	4'-10"	168	SQ-2		A36

STEEL ASTM	A992	UNO
ELECTRODES	E70XX L.H.	UNO
WELDS	1/4" FILLET	UNO
OPEN HOLES	13/16" UNO	FINISH PER SPECS
BOLTS	3/4" A325N	UNO
PAINT	1 S/C STD PRIMER U.N.O.	UNO

PROJECT NAME
OLDE ORCHARD ELEMENTARY SCHOOL

LOCATION
800 McNAUGHTEN RD. COLUMBUS, OHIO 43213

CONTRACTOR
THOMAS AND MARKER CONSTRUCTION

ARCHITECT
BRAUN & STEIDL

North Central Fabrication, Ltd.
NORTH CENTRAL FABRICATION
Mansfield, OH 44906
419-529-2744 FAX 419-529-5387 http://www.northcentralfab
AISC CERTIFIED FABRICATOR

DESCRIPTION	DATE	DATE	JOB No.
ANGLE	05/17/2011		70234
	DRAWN BY TMc	CHECKED BY TAN	DRG No. A49

PHASE				
1	2	3	4	5
1	0	0	0	0

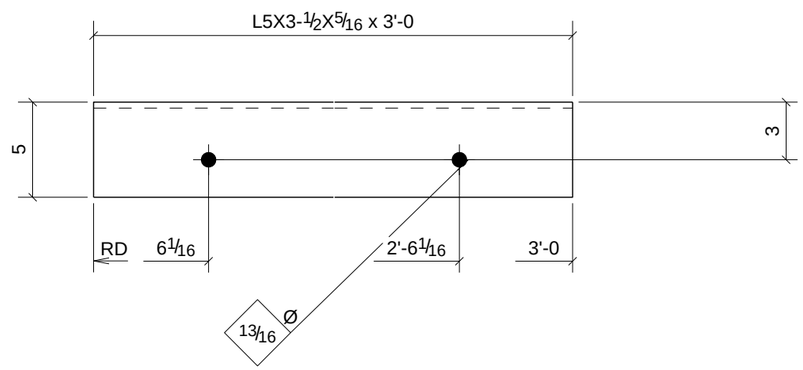

PROCESS CONTROL
PROCESS BY
FAB: _____
FIT AND WELD: _____
INSPECTION: _____
OTHER (IF NEEDED) _____
_____ : _____
_____ : _____
_____ : _____
_____ : _____
_____ : _____
REFERENCE LATEST ERECTION DRAWINGS FOR MATERIAL & FABRICATION INFORMATION

ONE - ANGLE - A50

DATE	NO.	DESCRIPTION	BY
5/28/11	B	For Checking	TMc
5/16/11	A	For Approval	TMc

BILL OF MATERIAL

Qty Ea.	Qty Tot	Piece Mark	Description	Length	Weight Total	Remarks	Adv Mill #	Steel Grade
	1	A50	ANGLE					
	1		L5X3-1/2X5/16	3'-0"	26	SQ-2		A36

STEEL ASTM	A992	UNO
ELECTRODES	E70XX L.H.	UNO
WELDS	1/4" FILLET	UNO
OPEN HOLES	13/16" UNO	FINISH PER SPECS
BOLTS	3/4" A325N	UNO
PAINT	1 S/C STD PRIMER U.N.O.	UNO

PROJECT NAME
OLDE ORCHARD ELEMENTARY SCHOOL

LOCATION
800 McNAUGHTEN RD. COLUMBUS, OHIO 43213

CONTRACTOR
THOMAS AND MARKER CONSTRUCTION

ARCHITECT
BRAUN & STEIDL

North Central Fabrication, Ltd.
NORTH CENTRAL FABRICATION
Mansfield, OH 44906
419-529-2744 FAX 419-529-5387 http://www.northcentralfab
AISC CERTIFIED FABRICATOR

DESCRIPTION	DATE	DATE	JOB No.
ANGLE	05/17/2011		70234
	DRAWN BY TMc	CHECKED BY TAN	DRG No. A50

PHASE				
1	2	3	4	5
1	0	0	0	0

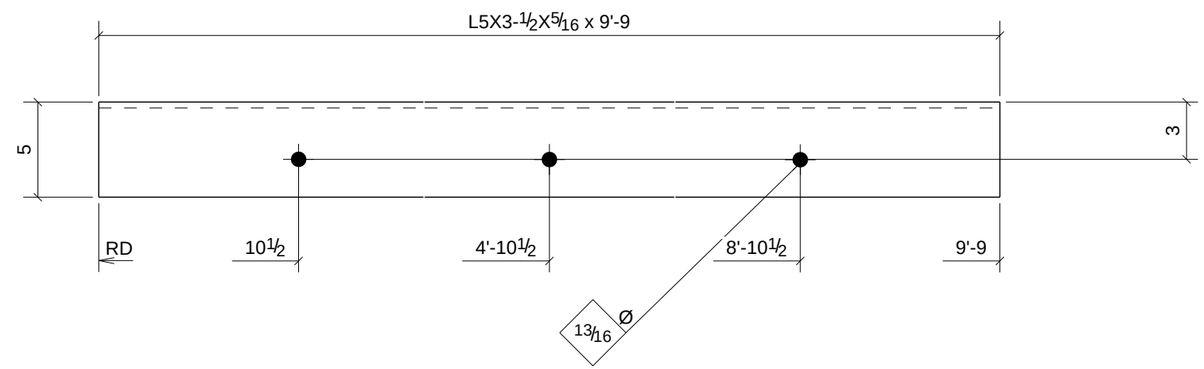

PROCESS CONTROL
PROCESS BY
FAB: _____
FIT AND WELD: _____
INSPECTION: _____
OTHER (IF NEEDED) _____
_____ : _____
_____ : _____
_____ : _____
_____ : _____
REFERENCE LATEST ERECTION DRAWINGS FOR MATERIAL & FABRICATION INFORMATION

ONE - ANGLE - A51

DATE	NO.	DESCRIPTION	BY
5/28/11	B	For Checking	TMc
5/16/11	A	For Approval	TMc

BILL OF MATERIAL

Qty Ea.	Qty Tot	Piece Mark	Description	Length	Weight Total	Remarks	Adv Mill #	Steel Grade
	1	A51	ANGLE					
	1		L5X3-1/2X5/16	9'-9"	85	SQ-2		A36

STEEL ASTM	A992	UNO
ELECTRODES	E70XX L.H.	UNO
WELDS	1/4" FILLET	UNO
OPEN HOLES	13/16" UNO	FINISH PER SPECS
BOLTS	3/4" A325N	UNO
PAINT	1 S/C STD PRIMER U.N.O.	UNO

PROJECT NAME
OLDE ORCHARD ELEMENTARY SCHOOL

LOCATION
800 McNAUGHTEN RD. COLUMBUS, OHIO 43213

CONTRACTOR
THOMAS AND MARKER CONSTRUCTION

ARCHITECT
BRAUN & STEIDL

North Central Fabrication, Ltd.
NORTH CENTRAL FABRICATION
Mansfield, OH 44906
419-529-2744 FAX 419-529-5387 http://www.northcentralfab
AISC CERTIFIED FABRICATOR

DESCRIPTION	DATE	DATE	JOB No.
ANGLE	05/18/2011		70234
	DRAWN BY TMc	CHECKED BY TAN	DRG No. A51

PHASE				
1	2	3	4	5
1	0	0	0	0

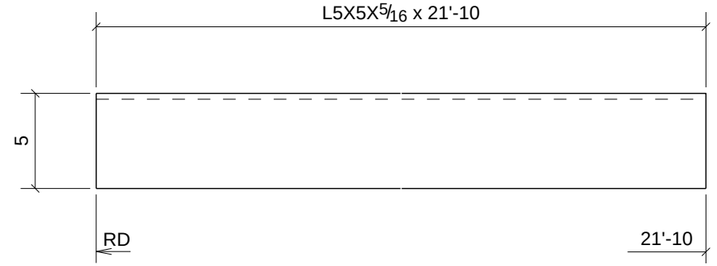

PROCESS CONTROL
PROCESS BY
FAB: _____
FIT AND WELD: _____
INSPECTION: _____
OTHER (IF NEEDED) _____
_____ : _____
_____ : _____
_____ : _____
_____ : _____
REFERENCE LATEST ERECTION DRAWINGS FOR MATERIAL & FABRICATION INFORMATION

ONE - ANGLE - A53

DATE	NO.	DESCRIPTION	BY
5/28/11	B	For Checking	TMc
5/16/11	A	For Approval	TMc

BILL OF MATERIAL

Qty Ea.	Qty Tot	Piece Mark	Description	Length	Weight Total	Remarks	Adv Mill #	Steel Grade
	1	A53	ANGLE					
	1		L5X5X5/16	21'-10"	225	SQ-2		A36

STEEL ASTM	A992	UNO
ELECTRODES	E70XX L.H.	UNO
WELDS	1/4" FILLET	UNO
OPEN HOLES	13/16" UNO	FINISH PER SPECS
BOLTS	3/4" A325N	UNO
PAINT	1 S/C STD PRIMER U.N.O.	UNO

PROJECT NAME
OLDE ORCHARD ELEMENTARY SCHOOL

LOCATION
800 McNAUGHTEN RD. COLUMBUS, OHIO 43213

CONTRACTOR
THOMAS AND MARKER CONSTRUCTION

ARCHITECT
BRAUN & STEIDL

North Central Fabrication, Ltd.
NORTH CENTRAL FABRICATION
Mansfield, OH 44906
419-529-2744 FAX 419-529-5387 http://www.northcentralfab
AISC CERTIFIED FABRICATOR

DESCRIPTION	DATE	DATE	JOB No.
ANGLE	05/18/2011		70234
	DRAWN BY TMc	CHECKED BY TAN	DRG No. A53

PHASE				
1	2	3	4	5
2	0	0	0	0

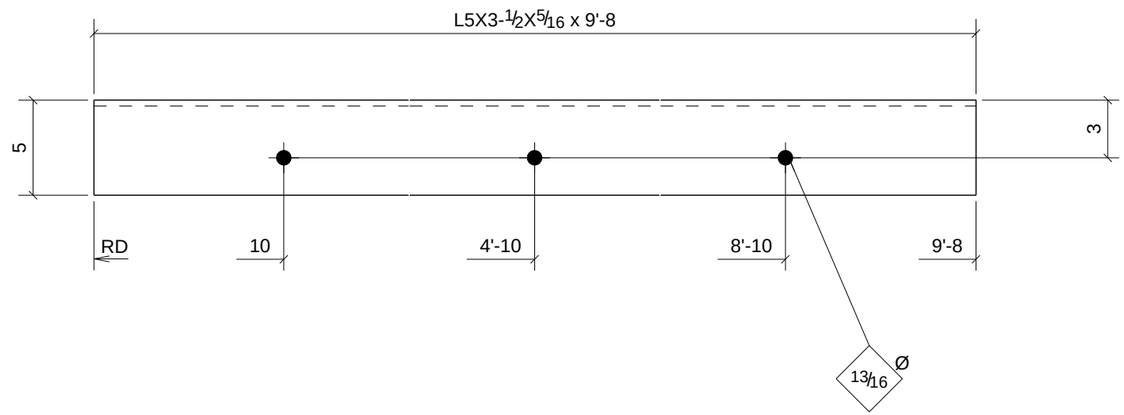

PROCESS CONTROL
PROCESS BY
FAB: _____
FIT AND WELD: _____
INSPECTION: _____
OTHER (IF NEEDED) _____
_____ : _____
_____ : _____
_____ : _____
_____ : _____
REFERENCE LATEST ERECTION DRAWINGS FOR MATERIAL & FABRICATION INFORMATION

2 - ANGLES - A55

DATE	NO.	DESCRIPTION	BY
5/28/11	B	For Checking	TMc
5/16/11	A	For Approval	TMc

BILL OF MATERIAL

Qty Ea.	Qty Tot	Piece Mark	Description	Length	Weight Total	Remarks	Adv Mill #	Steel Grade
	2	A55	ANGLES					
	2		L5X3-1/2X5/16	9'-8"	168	SQ-2		A36

STEEL ASTM	A992	UNO
ELECTRODES	E70XX L.H.	UNO
WELDS	1/4" FILLET	UNO
OPEN HOLES	13/16" UNO	FINISH PER SPECS
BOLTS	3/4" A325N	UNO
PAINT	1 S/C STD PRIMER U.N.O.	UNO

PROJECT NAME
OLDE ORCHARD ELEMENTARY SCHOOL

LOCATION
800 McNAUGHTEN RD. COLUMBUS, OHIO 43213

CONTRACTOR
THOMAS AND MARKER CONSTRUCTION

ARCHITECT
BRAUN & STEIDL

North Central Fabrication, Ltd.
NORTH CENTRAL FABRICATION
Mansfield, OH 44906
419-529-2744 FAX 419-529-5387 http://www.northcentralfab
AISC CERTIFIED FABRICATOR

DESCRIPTION	DATE	DATE	JOB No.
ANGLE	05/17/2011		70234
	DRAWN BY TMc	CHECKED BY TAN	DRG No. A55

PHASE				
1	2	3	4	5
1	0	0	0	0

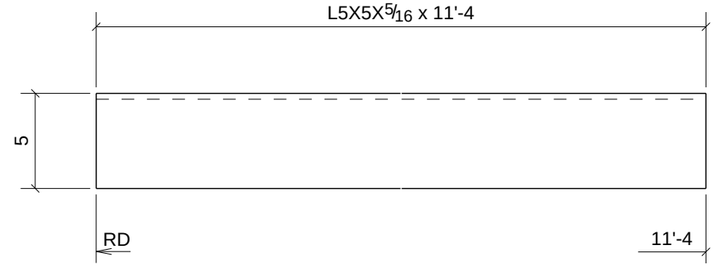

PROCESS CONTROL
PROCESS BY
FAB: _____
FIT AND WELD: _____
INSPECTION: _____
OTHER (IF NEEDED) _____
_____ : _____
_____ : _____
_____ : _____
_____ : _____
_____ : _____
REFERENCE LATEST ERECTION DRAWINGS FOR MATERIAL & FABRICATION INFORMATION

ONE - ANGLE - A56

DATE	NO.	DESCRIPTION	BY
5/28/11	B	For Checking	TMc
5/16/11	A	For Approval	TMc

BILL OF MATERIAL

Qty Ea.	Qty Tot	Piece Mark	Description	Length	Weight Total	Remarks	Adv Mill #	Steel Grade
	1	A56	ANGLE					
	1		L5X5X5/16	11'-4"	117	SQ-2		A36

STEEL ASTM	A992	UNO
ELECTRODES	E70XX L.H.	UNO
WELDS	1/4" FILLET	UNO
OPEN HOLES	13/16" UNO	FINISH PER SPECS
BOLTS	3/4" A325N	UNO
PAINT	1 S/C STD PRIMER U.N.O.	UNO

PROJECT NAME
OLDE ORCHARD ELEMENTARY SCHOOL

LOCATION
800 McNAUGHTEN RD. COLUMBUS, OHIO 43213

CONTRACTOR
THOMAS AND MARKER CONSTRUCTION

ARCHITECT
BRAUN & STEIDL

North Central Fabrication, Ltd.

NORTH CENTRAL FABRICATION
Mansfield, OH 44906
419-529-2744 FAX 419-529-5387 http://www.northcentralfab

AISC CERTIFIED FABRICATOR

DESCRIPTION	DATE	DATE	JOB No.
ANGLE	05/18/2011		70234
	DRAWN BY TMc	CHECKED BY TAN	DRG No. A56

PHASE				
1	2	3	4	5
2	0	0	0	0

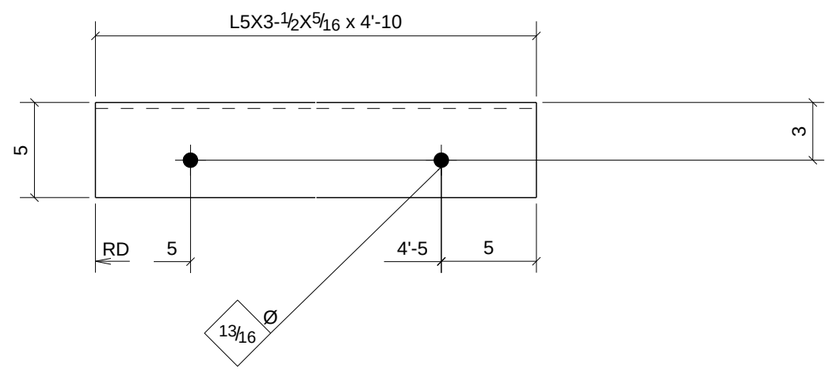

PROCESS CONTROL
PROCESS BY
FAB: _____
FIT AND WELD: _____
INSPECTION: _____
OTHER (IF NEEDED) _____
_____ : _____
_____ : _____
_____ : _____
_____ : _____
REFERENCE LATEST ERECTION DRAWINGS FOR MATERIAL & FABRICATION INFORMATION

2 - ANGLES - A57

DATE	NO.	DESCRIPTION	BY
5/28/11	B	For Checking	TMc
5/16/11	A	For Approval	TMc

BILL OF MATERIAL

Qty Ea.	Qty Tot	Piece Mark	Description	Length	Weight Total	Remarks	Adv Mill #	Steel Grade
	2	A57	ANGLES					
	2		L5X3-1/2X5/16	4'-10"	84	SQ-2		A36

STEEL ASTM	A992	UNO
ELECTRODES	E70XX L.H.	UNO
WELDS	1/4" FILLET	UNO
OPEN HOLES	13/16" UNO	FINISH PER SPECS
BOLTS	3/4" A325N	UNO
PAINT	1 S/C STD PRIMER U.N.O.	UNO

PROJECT NAME
OLDE ORCHARD ELEMENTARY SCHOOL

LOCATION
800 McNAUGHTEN RD. COLUMBUS, OHIO 43213

CONTRACTOR
THOMAS AND MARKER CONSTRUCTION

ARCHITECT
BRAUN & STEIDL

North Central Fabrication, Ltd.
NORTH CENTRAL FABRICATION
Mansfield, OH 44906
419-529-2744 FAX 419-529-5387 http://www.northcentralfab
AISC CERTIFIED FABRICATOR

DESCRIPTION	DATE	DATE	JOB No.
ANGLE	05/17/2011		70234
	DRAWN BY TMc	CHECKED BY TAN	DRG No. A57

PHASE				
1	2	3	4	5
2	0	0	0	0

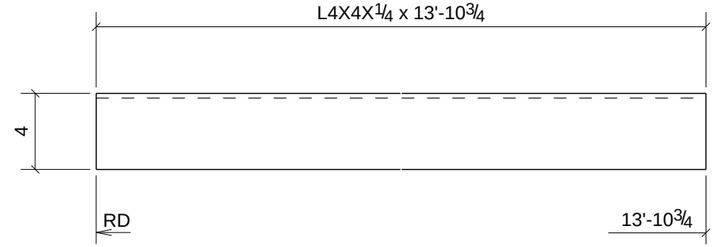

PROCESS CONTROL
PROCESS BY
FAB: _____
FIT AND WELD: _____
INSPECTION: _____
OTHER (IF NEEDED) _____
_____ : _____
_____ : _____
_____ : _____
_____ : _____
REFERENCE LATEST ERECTION DRAWINGS FOR MATERIAL & FABRICATION INFORMATION

2 - ANGLES - A59

DATE	NO.	DESCRIPTION	BY
5/28/11	B	For Checking	TMc
5/16/11	A	For Approval	TMc

BILL OF MATERIAL

Qty Ea.	Qty Tot	Piece Mark	Description	Length	Weight Total	Remarks	Adv Mill #	Steel Grade
	2	A59	ANGLES					
	2		L4X4X1/4	13'-10 3/4"	183	SQ-2		A36

STEEL ASTM	A992	UNO
ELECTRODES	E70XX L.H.	UNO
WELDS	1/4" FILLET	UNO
OPEN HOLES	13/16" UNO	FINISH PER SPECS
BOLTS	3/4" A325N	UNO
PAINT	1 S/C STD PRIMER U.N.O.	UNO

PROJECT NAME
OLDE ORCHARD ELEMENTARY SCHOOL

LOCATION
800 McNAUGHTEN RD. COLUMBUS, OHIO 43213

CONTRACTOR
THOMAS AND MARKER CONSTRUCTION

ARCHITECT
BRAUN & STEIDL

North Central Fabrication, Ltd.
NORTH CENTRAL FABRICATION
Mansfield, OH 44906
419-529-2744 FAX 419-529-5387 http://www.northcentralfab
AISC CERTIFIED FABRICATOR

DESCRIPTION	DATE	DATE	JOB No.
ANGLE	05/18/2011		70234
	DRAWN BY TMc	CHECKED BY TAN	DRG No. A59

PHASE				
1	2	3	4	5
2	0	0	0	0

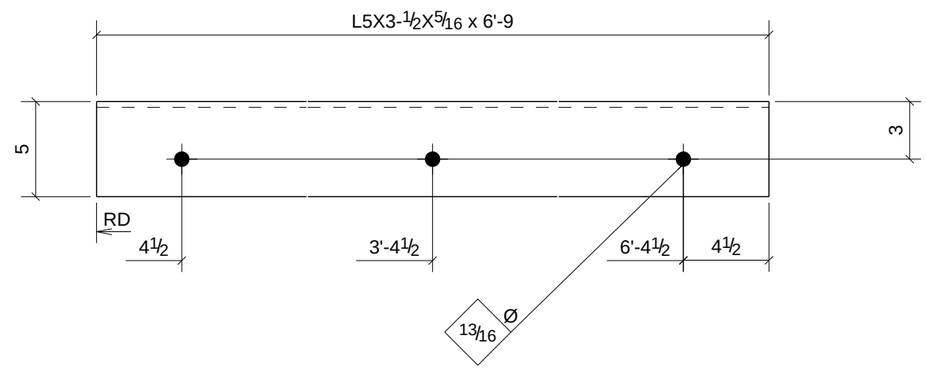

PROCESS CONTROL
PROCESS BY
FAB: _____
FIT AND WELD: _____
INSPECTION: _____
OTHER (IF NEEDED) _____
_____ : _____
_____ : _____
_____ : _____
_____ : _____
REFERENCE LATEST ERECTION DRAWINGS FOR MATERIAL & FABRICATION INFORMATION

2 - ANGLES - A60

DATE	NO.	DESCRIPTION	BY
5/28/11	B	For Checking	TMc
5/16/11	A	For Approval	TMc

BILL OF MATERIAL

Qty Ea.	Qty Tot	Piece Mark	Description	Length	Weight Total	Remarks	Adv Mill #	Steel Grade
	2	A60	ANGLES					
	2		L5X3-1/2X5/16	6'-9"	118	SQ-2		A36

STEEL ASTM	A992	UNO
ELECTRODES	E70XX L.H.	UNO
WELDS	1/4" FILLET	UNO
OPEN HOLES	13/16" UNO	FINISH PER SPECS
BOLTS	3/4" A325N	UNO
PAINT	1 S/C STD PRIMER U.N.O.	UNO

PROJECT NAME
OLDE ORCHARD ELEMENTARY SCHOOL

LOCATION
800 McNAUGHTEN RD. COLUMBUS, OHIO 43213

CONTRACTOR
THOMAS AND MARKER CONSTRUCTION

ARCHITECT
BRAUN & STEIDL

North Central Fabrication, Ltd.
NORTH CENTRAL FABRICATION
Mansfield, OH 44906
419-529-2744 FAX 419-529-5387 http://www.northcentralfab
AISC CERTIFIED FABRICATOR

DESCRIPTION	DATE	DATE	JOB No.
ANGLE	05/17/2011		70234
	DRAWN BY TMc	CHECKED BY TAN	DRG No. A60

PHASE				
1	2	3	4	5
1	0	0	0	0

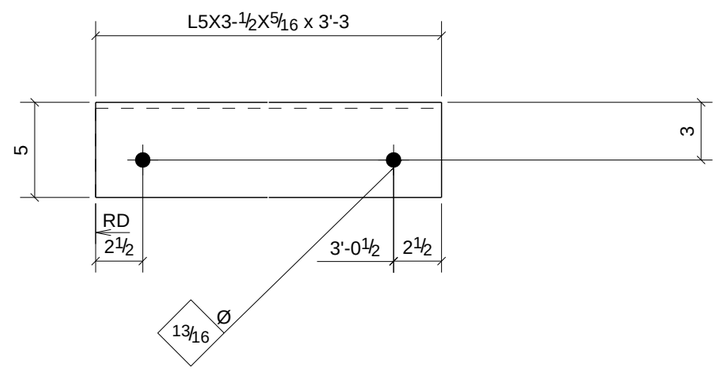

PROCESS CONTROL
PROCESS BY
FAB: _____
FIT AND WELD: _____
INSPECTION: _____
OTHER (IF NEEDED) _____
_____ : _____
_____ : _____
_____ : _____
_____ : _____
REFERENCE LATEST ERECTION DRAWINGS FOR MATERIAL & FABRICATION INFORMATION

ONE - ANGLE - A61

DATE	NO.	DESCRIPTION	BY
5/28/11	B	For Checking	TMc
5/16/11	A	For Approval	TMc

BILL OF MATERIAL

Qty Ea.	Qty Tot	Piece Mark	Description	Length	Weight Total	Remarks	Adv Mill #	Steel Grade
	1	A61	ANGLE					
	1		L5X3-1/2X5/16	3'-3"	28	SQ-2		A36

STEEL ASTM	A992	UNO
ELECTRODES	E70XX L.H.	UNO
WELDS	1/4" FILLET	UNO
OPEN HOLES	13/16" UNO	FINISH PER SPECS
BOLTS	3/4" A325N	UNO
PAINT	1 S/C STD PRIMER U.N.O.	UNO

PROJECT NAME
OLDE ORCHARD ELEMENTARY SCHOOL

LOCATION
800 McNAUGHTEN RD. COLUMBUS, OHIO 43213

CONTRACTOR
THOMAS AND MARKER CONSTRUCTION

ARCHITECT
BRAUN & STEIDL

North Central Fabrication, Ltd.
NORTH CENTRAL FABRICATION
Mansfield, OH 44906
419-529-2744 FAX 419-529-5387 http://www.northcentralfab
AISC CERTIFIED FABRICATOR

DESCRIPTION	DATE	DATE	JOB No.
ANGLE	05/17/2011		70234
	DRAWN BY TMc	CHECKED BY TAN	DRG No. A61

PHASE				
1	2	3	4	5
2	0	0	0	0

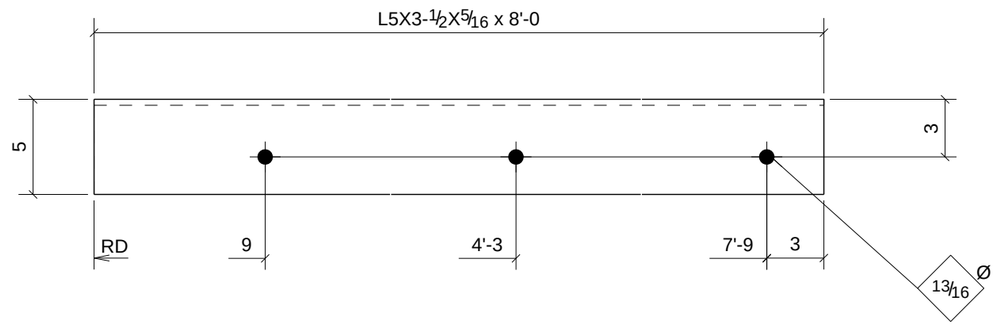

PROCESS CONTROL
PROCESS BY
FAB: _____
FIT AND WELD: _____
INSPECTION: _____
OTHER (IF NEEDED) _____
_____ : _____
_____ : _____
_____ : _____
_____ : _____
_____ : _____
REFERENCE LATEST ERECTION DRAWINGS FOR MATERIAL & FABRICATION INFORMATION

2 - ANGLES - A62

DATE	NO.	DESCRIPTION	BY
5/28/11	B	For Checking	TMc
5/16/11	A	For Approval	TMc

BILL OF MATERIAL

Qty Ea.	Qty Tot	Piece Mark	Description	Length	Weight Total	Remarks	Adv Mill #	Steel Grade
	2	A62	ANGLES					
	2		L5X3-1/2X5/16	8'-0"	139	SQ-2		A36

STEEL ASTM	A992	UNO
ELECTRODES	E70XX L.H.	UNO
WELDS	1/4" FILLET	UNO
OPEN HOLES	13/16" UNO	FINISH PER SPECS
BOLTS	3/4" A325N	UNO
PAINT	1 S/C STD PRIMER U.N.O.	UNO

PROJECT NAME
OLDE ORCHARD ELEMENTARY SCHOOL
LOCATION
800 McNAUGHTEN RD. COLUMBUS, OHIO 43213
CONTRACTOR
THOMAS AND MARKER CONSTRUCTION
ARCHITECT
BRAUN & STEIDL

North Central Fabrication, Ltd.
NORTH CENTRAL FABRICATION
Mansfield, OH 44906
419-529-2744 FAX 419-529-5387 http://www.northcentralfab
AISC CERTIFIED FABRICATOR

DESCRIPTION	DATE	DATE	JOB No.
ANGLE	05/17/2011		70234
	DRAWN BY TMc	CHECKED BY TAN	DRG No. A62

PHASE				
1	2	3	4	5
1	0	0	0	0

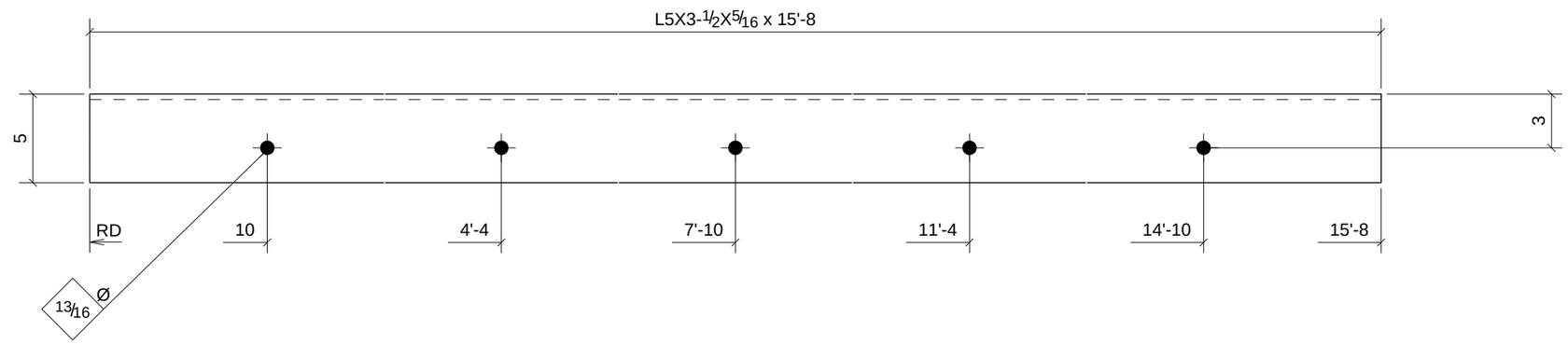

PROCESS CONTROL
PROCESS BY
FAB: _____
FIT AND WELD: _____
INSPECTION: _____
OTHER (IF NEEDED) _____
_____ : _____
_____ : _____
_____ : _____
_____ : _____
REFERENCE LATEST ERECTION DRAWINGS FOR MATERIAL & FABRICATION INFORMATION

ONE - ANGLE - A63

DATE	NO.	DESCRIPTION	BY
5/28/11	B	For Checking	TMc
5/16/11	A	For Approval	TMc

BILL OF MATERIAL

Qty Ea.	Qty Tot	Piece Mark	Description	Length	Weight Total	Remarks	Adv Mill #	Steel Grade
	1	A63	ANGLE					
	1		L5X3-1/2X5/16	15'-8"	136	SQ-2		A36

STEEL ASTM	A992	UNO
ELECTRODES	E70XX L.H.	UNO
WELDS	1/4" FILLET	UNO
OPEN HOLES	13/16" UNO	FINISH PER SPECS
BOLTS	3/4" A325N	UNO
PAINT	1 S/C STD PRIMER U.N.O.	UNO

PROJECT NAME
OLDE ORCHARD ELEMENTARY SCHOOL

LOCATION
800 McNAUGHTEN RD. COLUMBUS, OHIO 43213

CONTRACTOR
THOMAS AND MARKER CONSTRUCTION

ARCHITECT
BRAUN & STEIDL

North Central Fabrication, Ltd.
NORTH CENTRAL FABRICATION
Mansfield, OH 44906
419-529-2744 FAX 419-529-5387 http://www.northcentralfab
AISC CERTIFIED FABRICATOR

DESCRIPTION	DATE	DATE	JOB No.
ANGLE	05/17/2011		70234
	DRAWN BY TMc	CHECKED BY TAN	DRG No. A63

PHASE				
1	2	3	4	5
1	0	0	0	0

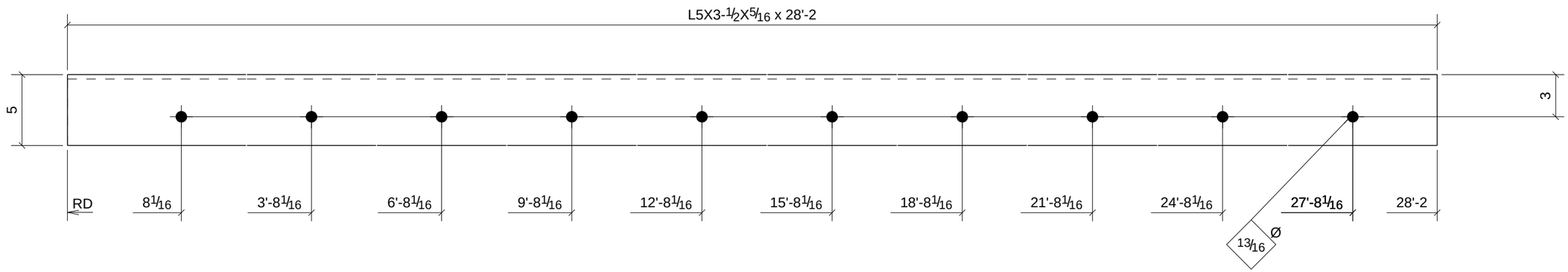

PROCESS CONTROL
PROCESS BY
FAB: _____
FIT AND WELD: _____
INSPECTION: _____
OTHER (IF NEEDED) _____
_____ : _____
_____ : _____
_____ : _____
_____ : _____
REFERENCE LATEST ERECTION DRAWINGS FOR MATERIAL & FABRICATION INFORMATION

ONE - ANGLE - A64

DATE	NO.	DESCRIPTION	BY
5/28/11	B	For Checking	TMc
5/16/11	A	For Approval	TMc

BILL OF MATERIAL

Qty Ea.	Qty Tot	Piece Mark	Description	Length	Weight Total	Remarks	Adv Mill #	Steel Grade
	1	A64	ANGLE					
	1		L5X3-1/2X5/16	28'-2"	245	SQ-2		A36

STEEL ASTM	A992	UNO
ELECTRODES	E70XX L.H.	UNO
WELDS	1/4" FILLET	UNO
OPEN HOLES	13/16" UNO	FINISH PER SPECS
BOLTS	3/4" A325N	UNO
PAINT	1 S/C STD PRIMER U.N.O.	UNO

PROJECT NAME
OLDE ORCHARD ELEMENTARY SCHOOL

LOCATION
800 McNAUGHTEN RD. COLUMBUS, OHIO 43213

CONTRACTOR
THOMAS AND MARKER CONSTRUCTION

ARCHITECT
BRAUN & STEIDL

North Central Fabrication, Ltd.
NORTH CENTRAL FABRICATION
Mansfield, OH 44906
419-529-2744 FAX 419-529-5387 http://www.northcentralfab
AISC CERTIFIED FABRICATOR

DESCRIPTION	DATE	DATE	JOB No.
ANGLE	05/17/2011		70234
	DRAWN BY TMc	CHECKED BY TAN	DRG No. A64

PHASE				
1	2	3	4	5
1	0	0	0	0

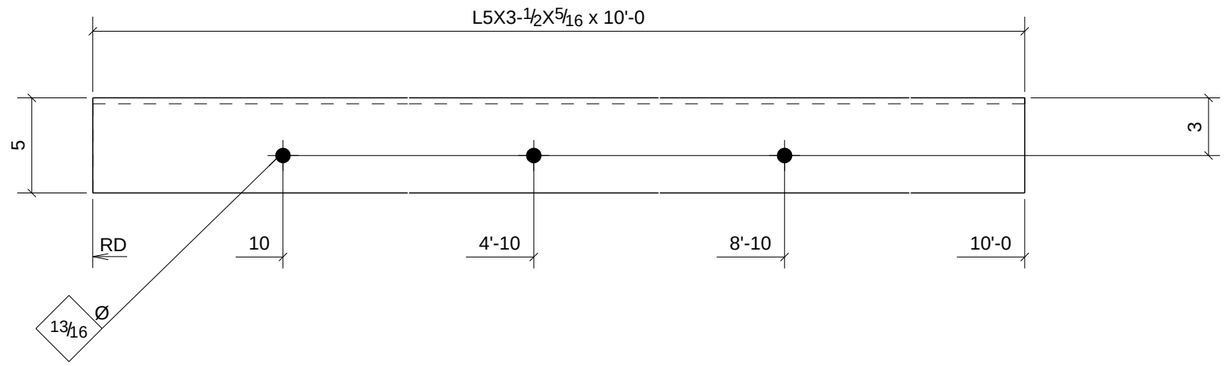

PROCESS CONTROL
PROCESS BY
FAB: _____
FIT AND WELD: _____
INSPECTION: _____
OTHER (IF NEEDED) _____
_____ : _____
_____ : _____
_____ : _____
_____ : _____
REFERENCE LATEST ERECTION DRAWINGS FOR MATERIAL & FABRICATION INFORMATION

ONE - ANGLE - A65

DATE	NO.	DESCRIPTION	BY
5/28/11	B	For Checking	TMc
5/16/11	A	For Approval	TMc

BILL OF MATERIAL

Qty Ea.	Qty Tot	Piece Mark	Description	Length	Weight Total	Remarks	Adv Mill #	Steel Grade
	1	A65	ANGLE					
	1		L5X3-1/2X5/16	10'-0"	87	SQ-2		A36

STEEL ASTM	A992	UNO
ELECTRODES	E70XX L.H.	UNO
WELDS	1/4" FILLET	UNO
OPEN HOLES	13/16" UNO	FINISH PER SPECS
BOLTS	3/4" A325N	UNO
PAINT	1 S/C STD PRIMER U.N.O.	UNO

PROJECT NAME
OLDE ORCHARD ELEMENTARY SCHOOL

LOCATION
800 McNAUGHTEN RD. COLUMBUS, OHIO 43213

CONTRACTOR
THOMAS AND MARKER CONSTRUCTION

ARCHITECT
BRAUN & STEIDL

North Central Fabrication, Ltd.
NORTH CENTRAL FABRICATION
Mansfield, OH 44906
419-529-2744 FAX 419-529-5387 http://www.northcentralfab
AISC CERTIFIED FABRICATOR

DESCRIPTION	DATE	DATE	JOB No.
ANGLE	05/17/2011		70234
	DRAWN BY TMc	CHECKED BY TAN	DRG No. A65

PHASE				
1	2	3	4	5
3	0	0	0	0

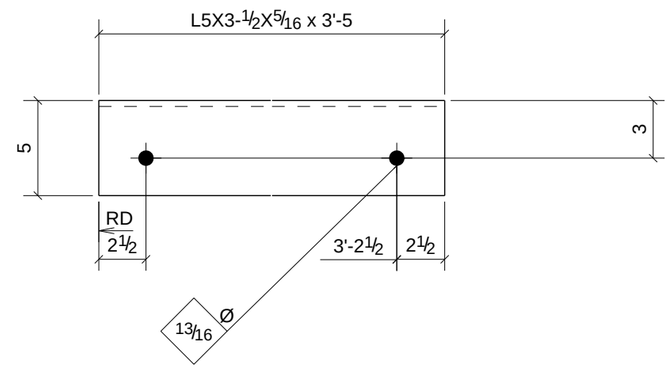

PROCESS CONTROL
PROCESS BY
FAB: _____
FIT AND WELD: _____
INSPECTION: _____
OTHER (IF NEEDED) _____
_____ : _____
_____ : _____
_____ : _____
_____ : _____
REFERENCE LATEST ERECTION DRAWINGS FOR MATERIAL & FABRICATION INFORMATION

3 - ANGLES - A66

DATE	NO.	DESCRIPTION	BY
5/28/11	B	For Checking	TMc
5/16/11	A	For Approval	TMc

BILL OF MATERIAL

Qty Ea.	Qty Tot	Piece Mark	Description	Length	Weight Total	Remarks	Adv Mill #	Steel Grade
	3	A66	ANGLES					
	3		L5X3-1/2X5/16	3'-5"	89	SQ-2		A36

STEEL ASTM	A992	UNO
ELECTRODES	E70XX L.H.	UNO
WELDS	1/4" FILLET	UNO
OPEN HOLES	13/16" UNO	FINISH PER SPECS
BOLTS	3/4" A325N	UNO
PAINT	1 S/C STD PRIMER U.N.O.	UNO

PROJECT NAME
OLDE ORCHARD ELEMENTARY SCHOOL

LOCATION
800 McNAUGHTEN RD. COLUMBUS, OHIO 43213

CONTRACTOR
THOMAS AND MARKER CONSTRUCTION

ARCHITECT
BRAUN & STEIDL

North Central Fabrication, Ltd.
NORTH CENTRAL FABRICATION
Mansfield, OH 44906
419-529-2744 FAX 419-529-5387 http://www.northcentralfab
AISC CERTIFIED FABRICATOR

DESCRIPTION	DATE	DATE	JOB No.
ANGLE	05/17/2011		70234
	DRAWN BY TMc	CHECKED BY TAN	DRG No. A66

PHASE				
1	2	3	4	5
1	0	0	0	0

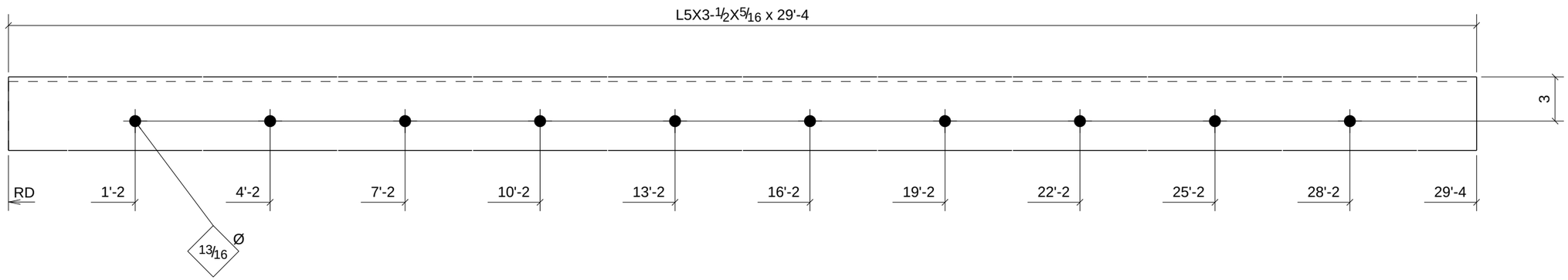

PROCESS CONTROL
PROCESS BY
FAB: _____
FIT AND WELD: _____
INSPECTION: _____
OTHER (IF NEEDED) _____
_____ : _____
_____ : _____
_____ : _____
_____ : _____
REFERENCE LATEST ERECTION DRAWINGS FOR MATERIAL & FABRICATION INFORMATION

ONE - ANGLE - A67

DATE	NO.	DESCRIPTION	BY
5/28/11	B	For Checking	TMc
5/16/11	A	For Approval	TMc

BILL OF MATERIAL

Qty Ea.	Qty Tot	Piece Mark	Description	Length	Weight Total	Remarks	Adv Mill #	Steel Grade
	1	A67	ANGLE					
	1		L5X3-1/2X5/16	29'-4"	256	SQ-2		A36

STEEL ASTM	A992	UNO
ELECTRODES	E70XX L.H.	UNO
WELDS	1/4" FILLET	UNO
OPEN HOLES	13/16" UNO	FINISH PER SPECS
BOLTS	3/4" A325N	UNO
PAINT	1 S/C STD PRIMER U.N.O.	UNO

PROJECT NAME
OLDE ORCHARD ELEMENTARY SCHOOL

LOCATION
800 McNAUGHTEN RD. COLUMBUS, OHIO 43213

CONTRACTOR
THOMAS AND MARKER CONSTRUCTION

ARCHITECT
BRAUN & STEIDL

North Central Fabrication, Ltd.
NORTH CENTRAL FABRICATION
Mansfield, OH 44906
419-529-2744 FAX 419-529-5387 http://www.northcentralfab
AISC CERTIFIED FABRICATOR

DESCRIPTION	DATE	DATE	JOB No.
ANGLE	05/17/2011		70234
	DRAWN BY TMc	CHECKED BY TAN	DRG No. A67

PHASE				
1	2	3	4	5
1	0	0	0	0

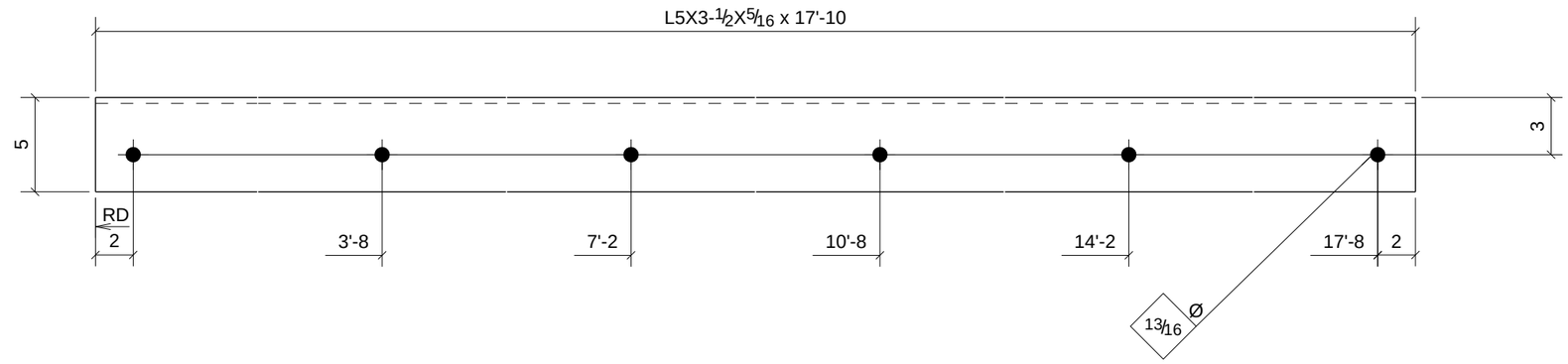

PROCESS CONTROL
PROCESS BY
FAB: _____
FIT AND WELD: _____
INSPECTION: _____
OTHER (IF NEEDED) _____
_____ : _____
_____ : _____
_____ : _____
_____ : _____
REFERENCE LATEST ERECTION DRAWINGS FOR MATERIAL & FABRICATION INFORMATION

ONE - ANGLE - A68

DATE	NO.	DESCRIPTION	BY
5/28/11	B	For Checking	TMc
5/16/11	A	For Approval	TMc

BILL OF MATERIAL

Qty Ea.	Qty Tot	Piece Mark	Description	Length	Weight Total	Remarks	Adv Mill #	Steel Grade
	1	A68	ANGLE					
	1		L5X3-1/2X5/16	17'-10"	155	SQ-2		A36

STEEL ASTM	A992	UNO
ELECTRODES	E70XX L.H.	UNO
WELDS	1/4" FILLET	UNO
OPEN HOLES	13/16" UNO	FINISH PER SPECS
BOLTS	3/4" A325N	UNO
PAINT	1 S/C STD PRIMER U.N.O.	UNO

PROJECT NAME
OLDE ORCHARD ELEMENTARY SCHOOL

LOCATION
800 McNAUGHTEN RD. COLUMBUS, OHIO 43213

CONTRACTOR
THOMAS AND MARKER CONSTRUCTION

ARCHITECT
BRAUN & STEIDL

North Central Fabrication, Ltd.
NORTH CENTRAL FABRICATION
Mansfield, OH 44906
419-529-2744 FAX 419-529-5387 http://www.northcentralfab
AISC CERTIFIED FABRICATOR

DESCRIPTION	DATE	DATE	JOB No.
ANGLE	05/17/2011		70234
	DRAWN BY TMc	CHECKED BY TAN	DRG No. A68

PHASE				
1	2	3	4	5
1	0	0	0	0

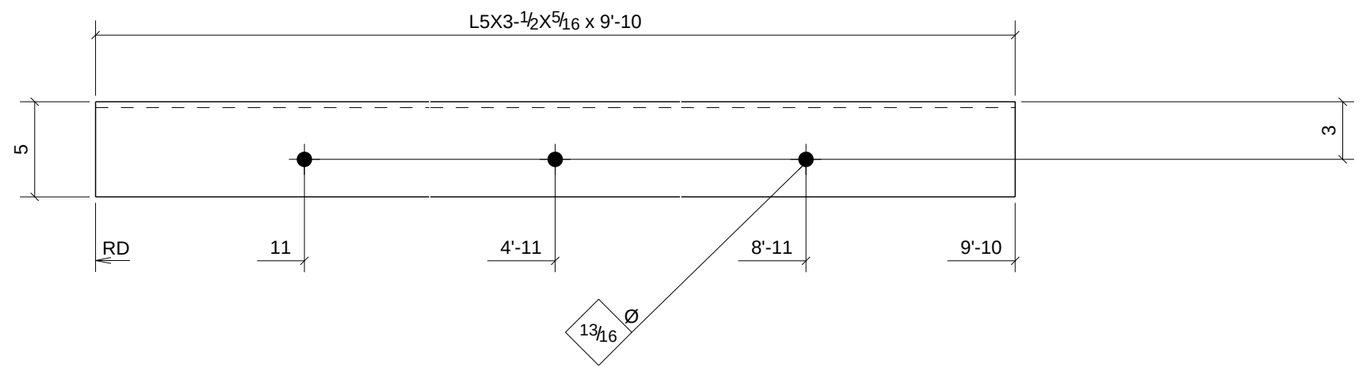

PROCESS CONTROL
PROCESS BY
FAB: _____
FIT AND WELD: _____
INSPECTION: _____
OTHER (IF NEEDED) _____
_____ : _____
_____ : _____
_____ : _____
_____ : _____
REFERENCE LATEST ERECTION DRAWINGS FOR MATERIAL & FABRICATION INFORMATION

ONE - ANGLE - A69

DATE	NO.	DESCRIPTION	BY
5/28/11	B	For Checking	TMc
5/16/11	A	For Approval	TMc

BILL OF MATERIAL

Qty Ea.	Qty Tot	Piece Mark	Description	Length	Weight Total	Remarks	Adv Mill #	Steel Grade
	1	A69	ANGLE					
	1		L5X3-1/2X5/16	9'-10"	86	SQ-2		A36

STEEL ASTM	A992	UNO
ELECTRODES	E70XX L.H.	UNO
WELDS	1/4" FILLET	UNO
OPEN HOLES	13/16" UNO	FINISH PER SPECS
BOLTS	3/4" A325N	UNO
PAINT	1 S/C STD PRIMER U.N.O.	UNO

PROJECT NAME
OLDE ORCHARD ELEMENTARY SCHOOL

LOCATION
800 McNAUGHTEN RD. COLUMBUS, OHIO 43213

CONTRACTOR
THOMAS AND MARKER CONSTRUCTION

ARCHITECT
BRAUN & STEIDL

North Central Fabrication, Ltd.
NORTH CENTRAL FABRICATION
Mansfield, OH 44906
419-529-2744 FAX 419-529-5387 http://www.northcentralfab
AISC CERTIFIED FABRICATOR

DESCRIPTION	DATE	DATE	JOB No.
ANGLE	05/17/2011		70234
	DRAWN BY TMc	CHECKED BY TAN	DRG No. A69

PHASE				
1	2	3	4	5
1	0	0	0	0

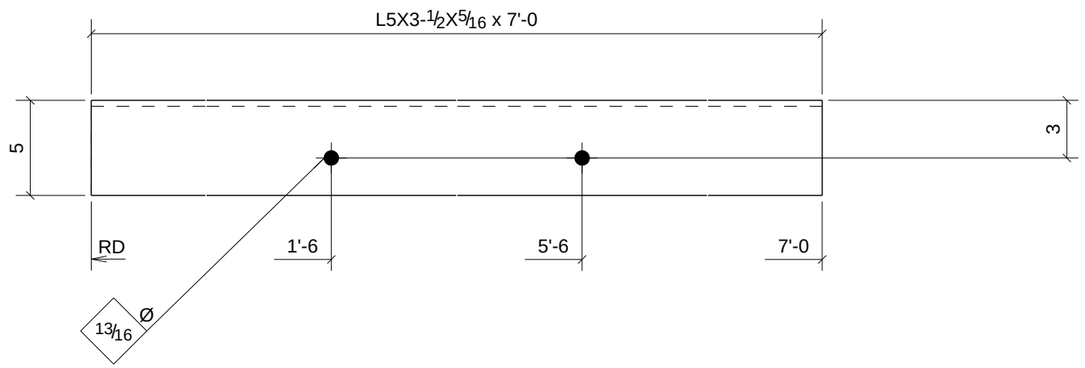

PROCESS CONTROL
PROCESS BY
FAB: _____
FIT AND WELD: _____
INSPECTION: _____
OTHER (IF NEEDED)
_____ : _____
_____ : _____
_____ : _____
_____ : _____
REFERENCE LATEST ERECTION DRAWINGS FOR MATERIAL & FABRICATION INFORMATION

ONE - ANGLE - A70

DATE	NO.	DESCRIPTION	BY
5/28/11	B	For Checking	TMc
5/16/11	A	For Approval	TMc

BILL OF MATERIAL

Qty Ea.	Qty Tot	Piece Mark	Description	Length	Weight Total	Remarks	Adv Mill #	Steel Grade
	1	A70	ANGLE					
	1		L5X3-1/2X5/16	7'-0"	61	SQ-2		A36

STEEL ASTM	A992	UNO
ELECTRODES	E70XX L.H.	UNO
WELDS	1/4" FILLET	UNO
OPEN HOLES	13/16" UNO	FINISH PER SPECS
BOLTS	3/4" A325N	UNO
PAINT	1 S/C STD PRIMER U.N.O.	UNO

PROJECT NAME
OLDE ORCHARD ELEMENTARY SCHOOL

LOCATION
800 McNAUGHTEN RD. COLUMBUS, OHIO 43213

CONTRACTOR
THOMAS AND MARKER CONSTRUCTION

ARCHITECT
BRAUN & STEIDL

North Central Fabrication, Ltd.
NORTH CENTRAL FABRICATION
Mansfield, OH 44906
419-529-2744 FAX 419-529-5387 http://www.northcentralfab

AISC CERTIFIED FABRICATOR

DESCRIPTION	DATE	DATE	JOB No.
ANGLE	05/17/2011		70234
	DRAWN BY TMc	CHECKED BY TAN	DRG No. A70

PHASE				
1	2	3	4	5
1	0	0	0	0

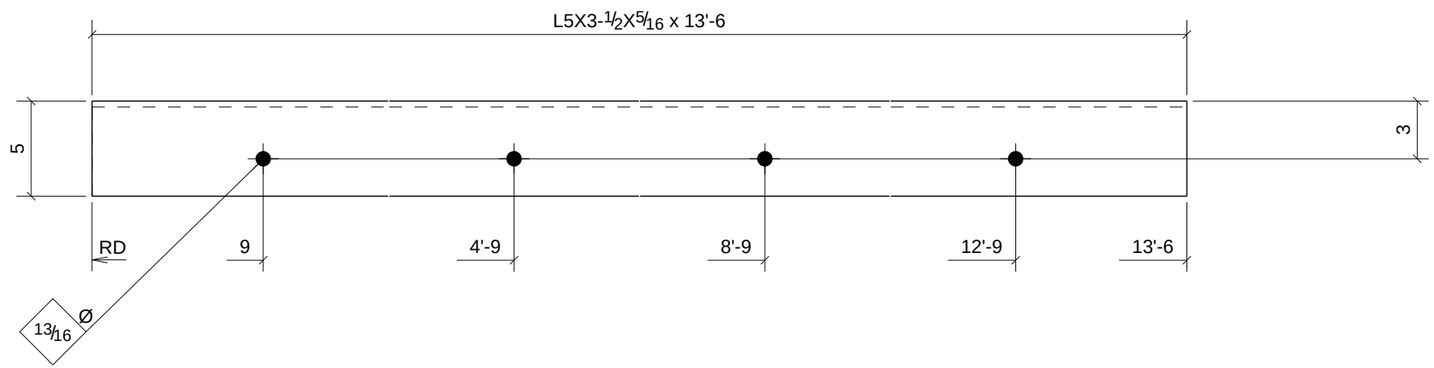

PROCESS CONTROL
PROCESS BY
FAB: _____
FIT AND WELD: _____
INSPECTION: _____
OTHER (IF NEEDED)
_____ : _____
_____ : _____
_____ : _____
_____ : _____
REFERENCE LATEST ERECTION DRAWINGS FOR MATERIAL & FABRICATION INFORMATION

ONE - ANGLE - A71

DATE	NO.	DESCRIPTION	BY
5/28/11	B	For Checking	TMc
5/16/11	A	For Approval	TMc

BILL OF MATERIAL

Qty Ea.	Qty Tot	Piece Mark	Description	Length	Weight Total	Remarks	Adv Mill #	Steel Grade
	1	A71	ANGLE					
	1		L5X3-1/2X5/16	13'-6"	118	SQ-2		A36

STEEL ASTM	A992	UNO
ELECTRODES	E70XX L.H.	UNO
WELDS	1/4" FILLET	UNO
OPEN HOLES	13/16" UNO	FINISH PER SPECS
BOLTS	3/4" A325N	UNO
PAINT	1 S/C STD PRIMER U.N.O.	UNO

PROJECT NAME
OLDE ORCHARD ELEMENTARY SCHOOL

LOCATION
800 McNAUGHTEN RD. COLUMBUS, OHIO 43213

CONTRACTOR
THOMAS AND MARKER CONSTRUCTION

ARCHITECT
BRAUN & STEIDL

North Central Fabrication, Ltd.
NORTH CENTRAL FABRICATION
Mansfield, OH 44906
419-529-2744 FAX 419-529-5387 http://www.northcentralfab
AISC CERTIFIED FABRICATOR

DESCRIPTION	DATE	DATE	JOB No.
ANGLE	05/17/2011		70234
	DRAWN BY TMc	CHECKED BY TAN	DRG No. A71

PHASE				
1	2	3	4	5
1	0	0	0	0

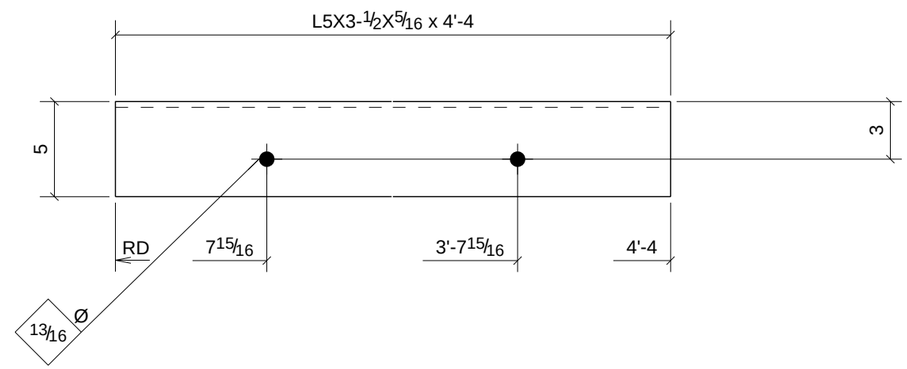

PROCESS CONTROL
PROCESS BY
FAB: _____
FIT AND WELD: _____
INSPECTION: _____
OTHER (IF NEEDED)
_____ : _____
_____ : _____
_____ : _____
_____ : _____
_____ : _____
REFERENCE LATEST ERECTION DRAWINGS FOR MATERIAL & FABRICATION INFORMATION

ONE - ANGLE - A73

DATE	NO.	DESCRIPTION	BY
5/28/11	B	For Checking	TMc
5/16/11	A	For Approval	TMc

BILL OF MATERIAL

Qty Ea.	Qty Tot	Piece Mark	Description	Length	Weight Total	Remarks	Adv Mill #	Steel Grade
	1	A73	ANGLE					
	1		L5X3-1/2X5/16	4'-4"	38	SQ-2		A36

STEEL ASTM	A992	UNO
ELECTRODES	E70XX L.H.	UNO
WELDS	1/4" FILLET	UNO
OPEN HOLES	13/16" UNO	FINISH PER SPECS
BOLTS	3/4" A325N	UNO
PAINT	1 S/C STD PRIMER U.N.O.	UNO

PROJECT NAME
OLDE ORCHARD ELEMENTARY SCHOOL

LOCATION
800 McNAUGHTEN RD. COLUMBUS, OHIO 43213

CONTRACTOR
THOMAS AND MARKER CONSTRUCTION

ARCHITECT
BRAUN & STEIDL

North Central Fabrication, Ltd.

NORTH CENTRAL FABRICATION
Mansfield, OH 44906
419-529-2744 FAX 419-529-5387 http://www.northcentralfab

AISC CERTIFIED FABRICATOR

DESCRIPTION	DATE	DATE	JOB No.
ANGLE	05/17/2011		70234
	DRAWN BY TMc	CHECKED BY TAN	DRG No. A73

PHASE				
1	2	3	4	5
1	0	0	0	0

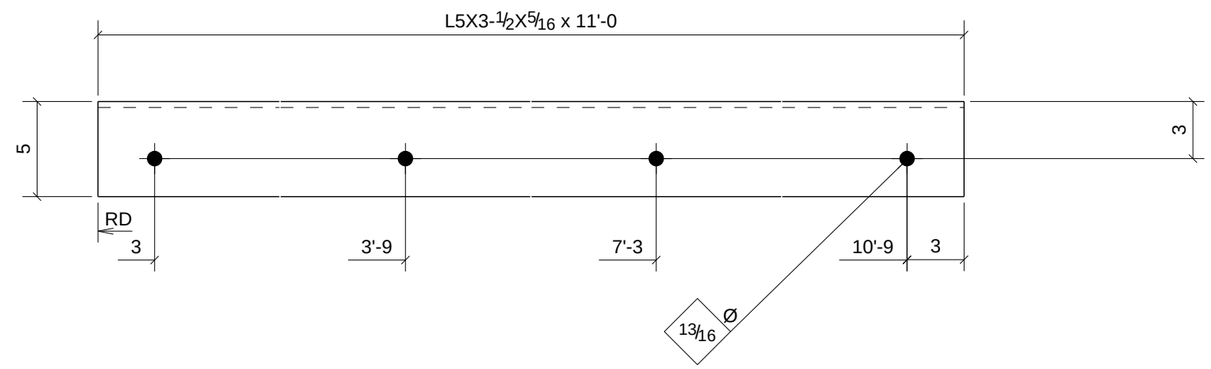

PROCESS CONTROL
PROCESS BY
FAB: _____
FIT AND WELD: _____
INSPECTION: _____
OTHER (IF NEEDED)
_____ : _____
_____ : _____
_____ : _____
_____ : _____
REFERENCE LATEST ERECTION DRAWINGS FOR MATERIAL & FABRICATION INFORMATION

ONE - ANGLE - A74

DATE	NO.	DESCRIPTION	BY
5/28/11	B	For Checking	TMc
5/16/11	A	For Approval	TMc

BILL OF MATERIAL

Qty Ea.	Qty Tot	Piece Mark	Description	Length	Weight Total	Remarks	Adv Mill #	Steel Grade
	1	A74	ANGLE					
	1		L5X3-1/2X5/16	11'-0"	96	SQ-2		A36

STEEL ASTM	A992		UNO
ELECTRODES	E70XX L.H.		UNO
WELDS	1/4" FILLET		UNO
OPEN HOLES	13/16"	UNO	FINISH PER SPECS
BOLTS	3/4" A325N		UNO
PAINT	1 S/C STD PRIMER U.N.O.		UNO

PROJECT NAME
OLDE ORCHARD ELEMENTARY SCHOOL

LOCATION
800 McNAUGHTEN RD. COLUMBUS, OHIO 43213

CONTRACTOR
THOMAS AND MARKER CONSTRUCTION

ARCHITECT
BRAUN & STEIDL

North Central Fabrication, Ltd.
NORTH CENTRAL FABRICATION
Mansfield, OH 44906
419-529-2744 FAX 419-529-5387 http://www.northcentralfab

AISC CERTIFIED FABRICATOR

DESCRIPTION	DATE	DATE	JOB No.
ANGLE	05/17/2011		70234
	DRAWN BY TMc	CHECKED BY TAN	DRG No. A74

PHASE				
1	2	3	4	5
4	0	0	0	0

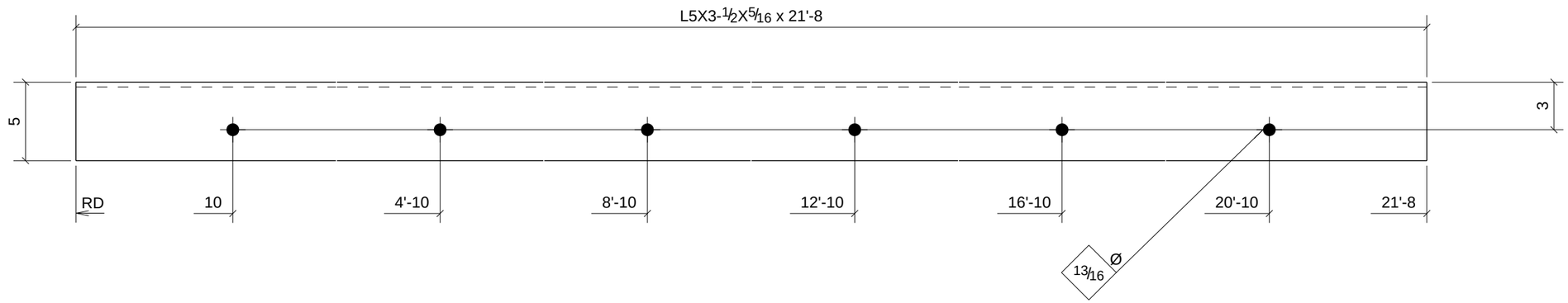

PROCESS CONTROL
PROCESS BY
FAB: _____
FIT AND WELD: _____
INSPECTION: _____
OTHER (IF NEEDED) _____
_____ : _____
_____ : _____
_____ : _____
_____ : _____
REFERENCE LATEST ERECTION DRAWINGS FOR MATERIAL & FABRICATION INFORMATION

4 - ANGLES - A75

DATE	NO.	DESCRIPTION	BY
5/28/11	B	For Checking	TMc
5/16/11	A	For Approval	TMc

BILL OF MATERIAL

Qty Ea.	Qty Tot	Piece Mark	Description	Length	Weight Total	Remarks	Adv Mill #	Steel Grade
	4	A75	ANGLES					
	4		L5X3-1/2X5/16	21'-8"	755	SQ-2		A36

STEEL ASTM	A992	UNO
ELECTRODES	E70XX L.H.	UNO
WELDS	1/4" FILLET	UNO
OPEN HOLES	13/16" UNO	FINISH PER SPECS
BOLTS	3/4" A325N	UNO
PAINT	1 S/C STD PRIMER U.N.O.	UNO

PROJECT NAME
OLDE ORCHARD ELEMENTARY SCHOOL

LOCATION
800 McNAUGHTEN RD. COLUMBUS, OHIO 43213

CONTRACTOR
THOMAS AND MARKER CONSTRUCTION

ARCHITECT
BRAUN & STEIDL

North Central Fabrication, Ltd.
NORTH CENTRAL FABRICATION
Mansfield, OH 44906
419-529-2744 FAX 419-529-5387 http://www.northcentralfab
AISC CERTIFIED FABRICATOR

DESCRIPTION	DATE	DATE	JOB No.
ANGLE	05/17/2011		70234
	DRAWN BY TMc	CHECKED BY TAN	DRG No. A75

PHASE				
1	2	3	4	5
1	0	0	0	0

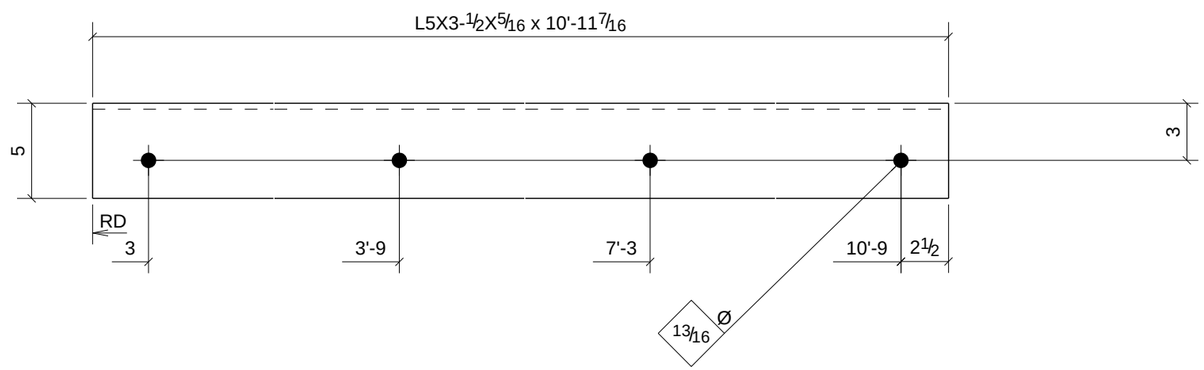

PROCESS CONTROL
PROCESS BY
FAB: _____
FIT AND WELD: _____
INSPECTION: _____
OTHER (IF NEEDED) _____
_____ : _____
_____ : _____
_____ : _____
_____ : _____
_____ : _____
REFERENCE LATEST ERECTION DRAWINGS FOR MATERIAL & FABRICATION INFORMATION

ONE - ANGLE - A76

DATE	NO.	DESCRIPTION	BY
5/28/11	B	For Checking	TMc
5/16/11	A	For Approval	TMc

BILL OF MATERIAL

Qty Ea.	Qty Tot	Piece Mark	Description	Length	Weight Total	Remarks	Adv Mill #	Steel Grade
	1	A76	ANGLE					
	1		L5X3-1/2X5/16	10'-11 7/16"	95	SQ-2		A36

STEEL ASTM	A992	UNO
ELECTRODES	E70XX L.H.	UNO
WELDS	1/4" FILLET	UNO
OPEN HOLES	13/16" UNO	FINISH PER SPECS
BOLTS	3/4" A325N	UNO
PAINT	1 S/C STD PRIMER U.N.O.	UNO

PROJECT NAME
OLDE ORCHARD ELEMENTARY SCHOOL

LOCATION
800 McNAUGHTEN RD. COLUMBUS, OHIO 43213

CONTRACTOR
THOMAS AND MARKER CONSTRUCTION

ARCHITECT
BRAUN & STEIDL

North Central Fabrication, Ltd.
NORTH CENTRAL FABRICATION
Mansfield, OH 44906
419-529-2744 FAX 419-529-5387 http://www.northcentralfab
AISC CERTIFIED FABRICATOR

DESCRIPTION	DATE	DATE	JOB No.
ANGLE	05/17/2011		70234
	DRAWN BY TMc	CHECKED BY TAN	DRG No. A76

PHASE				
1	2	3	4	5
1	0	0	0	0

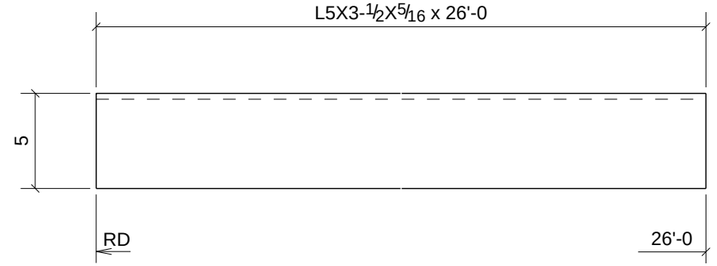

PROCESS CONTROL
PROCESS BY
FAB: _____
FIT AND WELD: _____
INSPECTION: _____
OTHER (IF NEEDED) _____
_____ : _____
_____ : _____
_____ : _____
_____ : _____
_____ : _____
REFERENCE LATEST ERECTION DRAWINGS FOR MATERIAL & FABRICATION INFORMATION

ONE - ANGLE - A77

DATE	NO.	DESCRIPTION	BY
5/28/11	B	For Checking	TMc
5/16/11	A	For Approval	TMc

BILL OF MATERIAL

Qty Ea.	Qty Tot	Piece Mark	Description	Length	Weight Total	Remarks	Adv Mill #	Steel Grade
	1	A77	ANGLE					
	1		L5X3-1/2X5/16	26'-0"	227	SQ-2		A36

STEEL ASTM	A992	UNO
ELECTRODES	E70XX L.H.	UNO
WELDS	1/4" FILLET	UNO
OPEN HOLES	13/16" UNO	FINISH PER SPECS
BOLTS	3/4" A325N	UNO
PAINT	1 S/C STD PRIMER U.N.O.	UNO

PROJECT NAME
OLDE ORCHARD ELEMENTARY SCHOOL

LOCATION
800 McNAUGHTEN RD. COLUMBUS, OHIO 43213

CONTRACTOR
THOMAS AND MARKER CONSTRUCTION

ARCHITECT
BRAUN & STEIDL

North Central Fabrication, Ltd.
NORTH CENTRAL FABRICATION
Mansfield, OH 44906
419-529-2744 FAX 419-529-5387 http://www.northcentralfab

AISC CERTIFIED FABRICATOR

DESCRIPTION	DATE	DATE	JOB No.
ANGLE	05/17/2011		70234
	DRAWN BY TMc	CHECKED BY TAN	DRG No. A77

PHASE				
1	2	3	4	5
1	0	0	0	0

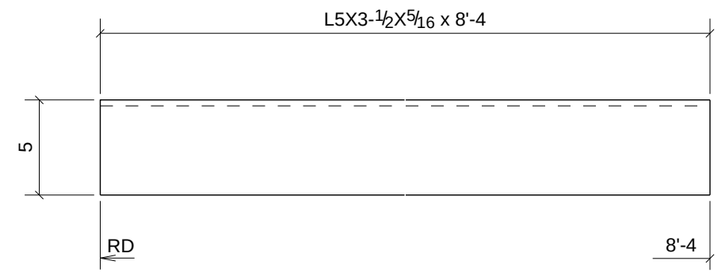

PROCESS CONTROL
PROCESS BY
FAB: _____
FIT AND WELD: _____
INSPECTION: _____
OTHER (IF NEEDED) _____
_____ : _____
_____ : _____
_____ : _____
_____ : _____
REFERENCE LATEST ERECTION DRAWINGS FOR MATERIAL & FABRICATION INFORMATION

ONE - ANGLE - A78

DATE	NO.	DESCRIPTION	BY
5/28/11	B	For Checking	TMc
5/16/11	A	For Approval	TMc

BILL OF MATERIAL

Qty Ea.	Qty Tot	Piece Mark	Description	Length	Weight Total	Remarks	Adv Mill #	Steel Grade
	1	A78	ANGLE					
	1		L5X3-1/2X5/16	8'-4"	73	SQ-2		A36

STEEL ASTM	A992		UNO
ELECTRODES	E70XX L.H.		UNO
WELDS	1/4" FILLET		UNO
OPEN HOLES	13/16"	UNO	FINISH PER SPECS
BOLTS	3/4" A325N		UNO
PAINT	1 S/C STD PRIMER U.N.O.		UNO

PROJECT NAME
OLDE ORCHARD ELEMENTARY SCHOOL

LOCATION
800 McNAUGHTEN RD. COLUMBUS, OHIO 43213

CONTRACTOR
THOMAS AND MARKER CONSTRUCTION

ARCHITECT
BRAUN & STEIDL

North Central Fabrication, Ltd.
NORTH CENTRAL FABRICATION
Mansfield, OH 44906
419-529-2744 FAX 419-529-5387 http://www.northcentralfab
AISC CERTIFIED FABRICATOR

DESCRIPTION	DATE	DATE	JOB No.
ANGLE	05/17/2011		70234
	DRAWN BY TMc	CHECKED BY TAN	DRG No. A78

PHASE				
1	2	3	4	5
1	0	0	0	0

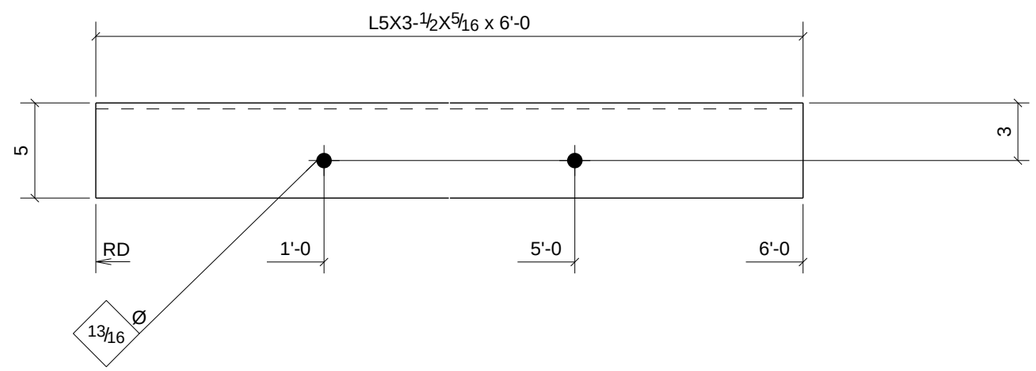

PROCESS CONTROL
PROCESS BY
FAB: _____
FIT AND WELD: _____
INSPECTION: _____
OTHER (IF NEEDED) _____
_____ : _____
_____ : _____
_____ : _____
_____ : _____
REFERENCE LATEST ERECTION DRAWINGS FOR MATERIAL & FABRICATION INFORMATION

ONE - ANGLE - A79

DATE	NO.	DESCRIPTION	BY
5/28/11	B	For Checking	TMc
5/16/11	A	For Approval	TMc

BILL OF MATERIAL

Qty Ea.	Qty Tot	Piece Mark	Description	Length	Weight Total	Remarks	Adv Mill #	Steel Grade
	1	A79	ANGLE					
	1		L5X3-1/2X5/16	6'-0"	52	SQ-2		A36

STEEL ASTM	A992	UNO
ELECTRODES	E70XX L.H.	UNO
WELDS	1/4" FILLET	UNO
OPEN HOLES	13/16" UNO	FINISH PER SPECS
BOLTS	3/4" A325N	UNO
PAINT	1 S/C STD PRIMER U.N.O.	UNO

PROJECT NAME
OLDE ORCHARD ELEMENTARY SCHOOL

LOCATION
800 McNAUGHTEN RD. COLUMBUS, OHIO 43213

CONTRACTOR
THOMAS AND MARKER CONSTRUCTION

ARCHITECT
BRAUN & STEIDL

North Central Fabrication, Ltd.
NORTH CENTRAL FABRICATION
Mansfield, OH 44906
419-529-2744 FAX 419-529-5387 http://www.northcentralfab
AISC CERTIFIED FABRICATOR

DESCRIPTION	DATE	DATE	JOB No.
ANGLE	05/17/2011		70234
	DRAWN BY TMc	CHECKED BY TAN	DRG No. A79

PHASE				
1	2	3	4	5
1	0	0	0	0

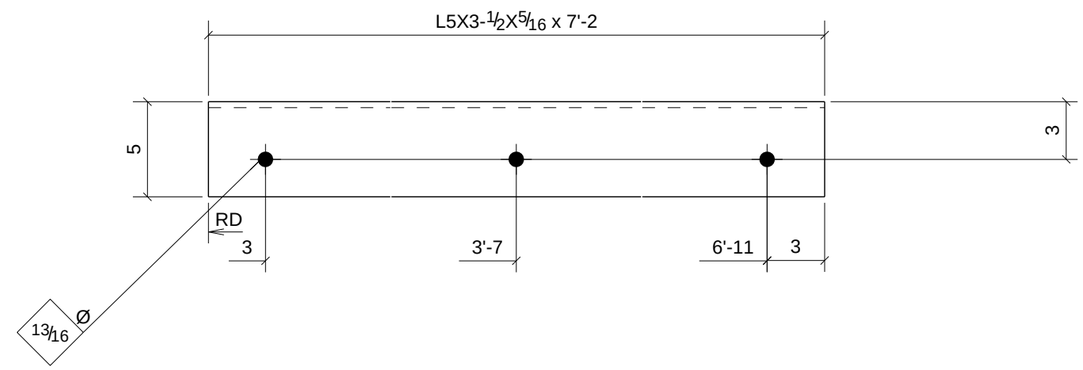

PROCESS CONTROL
PROCESS BY
FAB: _____
FIT AND WELD: _____
INSPECTION: _____
OTHER (IF NEEDED) _____
_____ : _____
_____ : _____
_____ : _____
_____ : _____
REFERENCE LATEST ERECTION DRAWINGS FOR MATERIAL & FABRICATION INFORMATION

ONE - ANGLE - A80

DATE	NO.	DESCRIPTION	BY
5/28/11	B	For Checking	TMc
5/16/11	A	For Approval	TMc

BILL OF MATERIAL

Qty Ea.	Qty Tot	Piece Mark	Description	Length	Weight Total	Remarks	Adv Mill #	Steel Grade
	1	A80	ANGLE					
	1		L5X3-1/2X5/16	7'-2"	62	SQ-2		A36

STEEL ASTM	A992	UNO
ELECTRODES	E70XX L.H.	UNO
WELDS	1/4" FILLET	UNO
OPEN HOLES	13/16" UNO	FINISH PER SPECS
BOLTS	3/4" A325N	UNO
PAINT	1 S/C STD PRIMER U.N.O.	UNO

PROJECT NAME
OLDE ORCHARD ELEMENTARY SCHOOL

LOCATION
800 McNAUGHTEN RD. COLUMBUS, OHIO 43213

CONTRACTOR
THOMAS AND MARKER CONSTRUCTION

ARCHITECT
BRAUN & STEIDL

North Central Fabrication, Ltd.
NORTH CENTRAL FABRICATION
Mansfield, OH 44906
419-529-2744 FAX 419-529-5387 http://www.northcentralfab
AISC CERTIFIED FABRICATOR

DESCRIPTION	DATE	DATE	JOB No.
ANGLE	05/17/2011		70234
	DRAWN BY TMc	CHECKED BY TAN	DRG No. A80

PHASE				
1	2	3	4	5
2	0	0	0	0

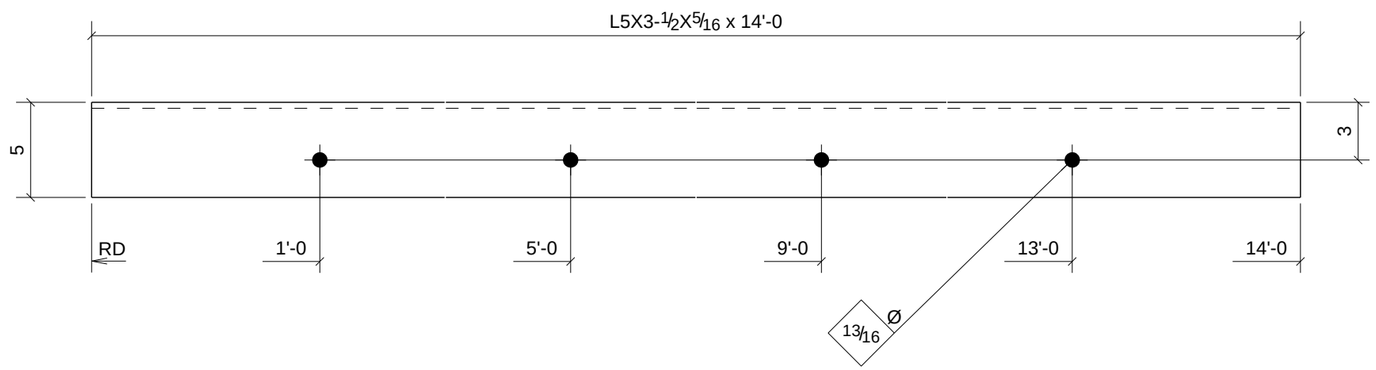

PROCESS CONTROL
PROCESS BY
FAB: _____
FIT AND WELD: _____
INSPECTION: _____
OTHER (IF NEEDED)
_____ : _____
_____ : _____
_____ : _____
_____ : _____
REFERENCE LATEST ERECTION DRAWINGS FOR MATERIAL & FABRICATION INFORMATION

2 - ANGLES - A81

DATE	NO.	DESCRIPTION	BY
5/28/11	B	For Checking	TMc
5/16/11	A	For Approval	TMc

BILL OF MATERIAL

Qty Ea.	Qty Tot	Piece Mark	Description	Length	Weight Total	Remarks	Adv Mill #	Steel Grade
	2	A81	ANGLES					
	2		L5X3-1/2X5/16	14'-0"	244	SQ-2		A36

STEEL ASTM	A992		UNO
ELECTRODES	E70XX L.H.		UNO
WELDS	1/4" FILLET		UNO
OPEN HOLES	13/16"	UNO	FINISH PER SPECS
BOLTS	3/4" A325N		UNO
PAINT	1 S/C STD PRIMER U.N.O.		UNO

PROJECT NAME
OLDE ORCHARD ELEMENTARY SCHOOL

LOCATION
800 McNAUGHTEN RD. COLUMBUS, OHIO 43213

CONTRACTOR
THOMAS AND MARKER CONSTRUCTION

ARCHITECT
BRAUN & STEIDL

North Central Fabrication, Ltd.
NORTH CENTRAL FABRICATION
Mansfield, OH 44906
419-529-2744 FAX 419-529-5387 http://www.northcentralfab

AISC CERTIFIED FABRICATOR

DESCRIPTION	DATE	DATE	JOB No.
ANGLE	05/17/2011		70234
	DRAWN BY TMc	CHECKED BY TAN	DRG No. A81

PHASE				
1	2	3	4	5
1	0	0	0	0

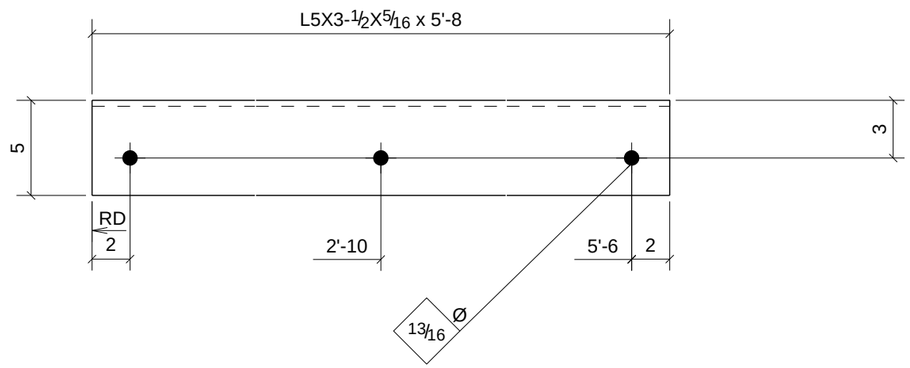

PROCESS CONTROL
PROCESS BY
FAB: _____
FIT AND WELD: _____
INSPECTION: _____
OTHER (IF NEEDED)
_____ : _____
_____ : _____
_____ : _____
_____ : _____
REFERENCE LATEST ERECTION DRAWINGS FOR MATERIAL & FABRICATION INFORMATION

ONE - ANGLE - A82

DATE	NO.	DESCRIPTION	BY
5/28/11	B	For Checking	TMc
5/16/11	A	For Approval	TMc

BILL OF MATERIAL

Qty Ea.	Qty Tot	Piece Mark	Description	Length	Weight Total	Remarks	Adv Mill #	Steel Grade
	1	A82	ANGLE					
	1		L5X3-1/2X5/16	5'-8"	49	SQ-2		A36

STEEL ASTM	A992	UNO
ELECTRODES	E70XX L.H.	UNO
WELDS	1/4" FILLET	UNO
OPEN HOLES	13/16" UNO	FINISH PER SPECS
BOLTS	3/4" A325N	UNO
PAINT	1 S/C STD PRIMER U.N.O.	UNO

PROJECT NAME
OLDE ORCHARD ELEMENTARY SCHOOL

LOCATION
800 McNAUGHTEN RD. COLUMBUS, OHIO 43213

CONTRACTOR
THOMAS AND MARKER CONSTRUCTION

ARCHITECT
BRAUN & STEIDL

North Central Fabrication, Ltd.
NORTH CENTRAL FABRICATION
Mansfield, OH 44906
419-529-2744 FAX 419-529-5387 http://www.northcentralfab

AISC CERTIFIED FABRICATOR

DESCRIPTION	DATE	DATE	JOB No.
ANGLE	05/17/2011		70234
	DRAWN BY TMc	CHECKED BY TAN	DRG No. A82

PHASE				
1	2	3	4	5
1	0	0	0	0

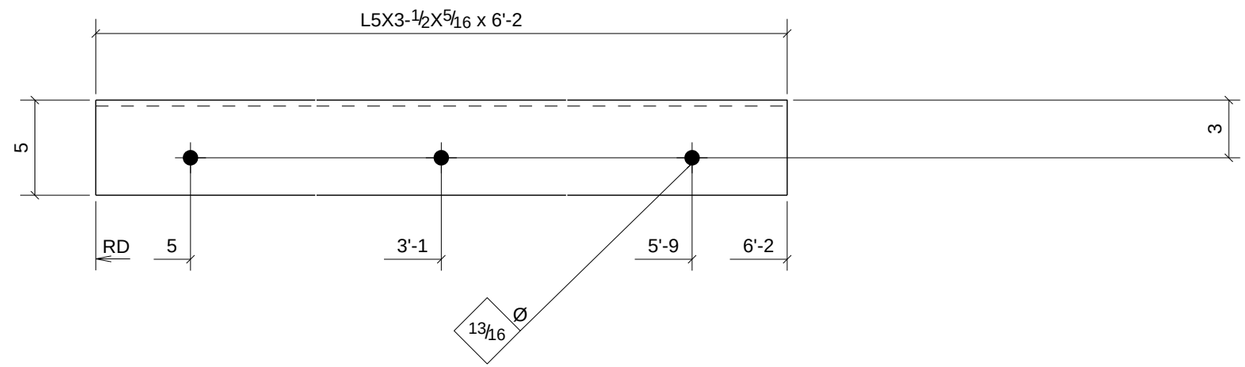

PROCESS CONTROL
PROCESS BY
FAB: _____
FIT AND WELD: _____
INSPECTION: _____
OTHER (IF NEEDED) _____
_____ : _____
_____ : _____
_____ : _____
_____ : _____
REFERENCE LATEST ERECTION DRAWINGS FOR MATERIAL & FABRICATION INFORMATION

ONE - ANGLE - A83

DATE	NO.	DESCRIPTION	BY
5/28/11	B	For Checking	TMc
5/16/11	A	For Approval	TMc

BILL OF MATERIAL

Qty Ea.	Qty Tot	Piece Mark	Description	Length	Weight Total	Remarks	Adv Mill #	Steel Grade
	1	A83	ANGLE					
	1		L5X3-1/2X5/16	6'-2"	54	SQ-2		A36

STEEL ASTM	A992	UNO
ELECTRODES	E70XX L.H.	UNO
WELDS	1/4" FILLET	UNO
OPEN HOLES	13/16" UNO	FINISH PER SPECS
BOLTS	3/4" A325N	UNO
PAINT	1 S/C STD PRIMER U.N.O.	UNO

PROJECT NAME
OLDE ORCHARD ELEMENTARY SCHOOL

LOCATION
800 McNAUGHTEN RD. COLUMBUS, OHIO 43213

CONTRACTOR
THOMAS AND MARKER CONSTRUCTION

ARCHITECT
BRAUN & STEIDL

North Central Fabrication, Ltd.
NORTH CENTRAL FABRICATION
Mansfield, OH 44906
419-529-2744 FAX 419-529-5387 http://www.northcentralfab
AISC CERTIFIED FABRICATOR

DESCRIPTION	DATE	DATE	JOB No.
ANGLE	05/17/2011		70234
	DRAWN BY TMc	CHECKED BY TAN	DRG No. A83

PHASE				
1	2	3	4	5
1	0	0	0	0

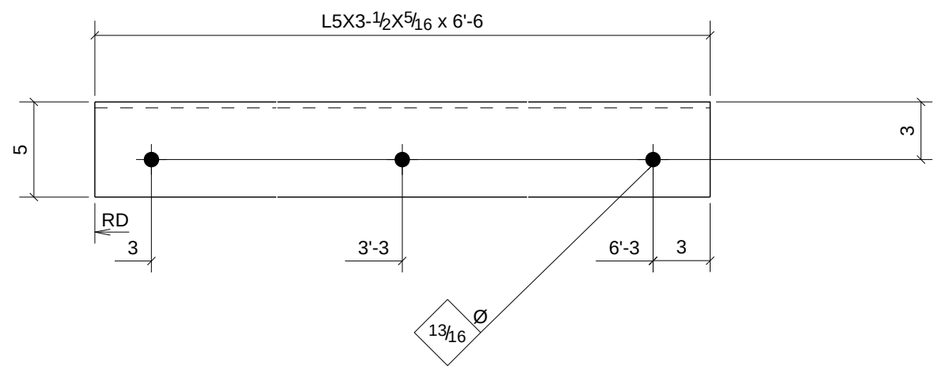

PROCESS CONTROL
PROCESS BY
FAB: _____
FIT AND WELD: _____
INSPECTION: _____
OTHER (IF NEEDED) _____
_____ : _____
_____ : _____
_____ : _____
_____ : _____
_____ : _____
REFERENCE LATEST ERECTION DRAWINGS FOR MATERIAL & FABRICATION INFORMATION

ONE - ANGLE - A84

DATE	NO.	DESCRIPTION	BY
5/28/11	B	For Checking	TMc
5/16/11	A	For Approval	TMc

BILL OF MATERIAL

Qty Ea.	Qty Tot	Piece Mark	Description	Length	Weight Total	Remarks	Adv Mill #	Steel Grade
	1	A84	ANGLE					
	1		L5X3-1/2X5/16	6'-6"	57	SQ-2		A36

STEEL ASTM	A992	UNO
ELECTRODES	E70XX L.H.	UNO
WELDS	1/4" FILLET	UNO
OPEN HOLES	13/16" UNO	FINISH PER SPECS
BOLTS	3/4" A325N	UNO
PAINT	1 S/C STD PRIMER U.N.O.	UNO

PROJECT NAME
OLDE ORCHARD ELEMENTARY SCHOOL
LOCATION
800 McNAUGHTEN RD. COLUMBUS, OHIO 43213
CONTRACTOR
THOMAS AND MARKER CONSTRUCTION
ARCHITECT
BRAUN & STEIDL

North Central Fabrication, Ltd.
NORTH CENTRAL FABRICATION
Mansfield, OH 44906
419-529-2744 FAX 419-529-5387 http://www.northcentralfab
AISC CERTIFIED FABRICATOR

DESCRIPTION	DATE	DATE	JOB No.
ANGLE	05/17/2011		70234
	DRAWN BY TMc	CHECKED BY TAN	DRG No. A84

PHASE				
1	2	3	4	5
1	0	0	0	0

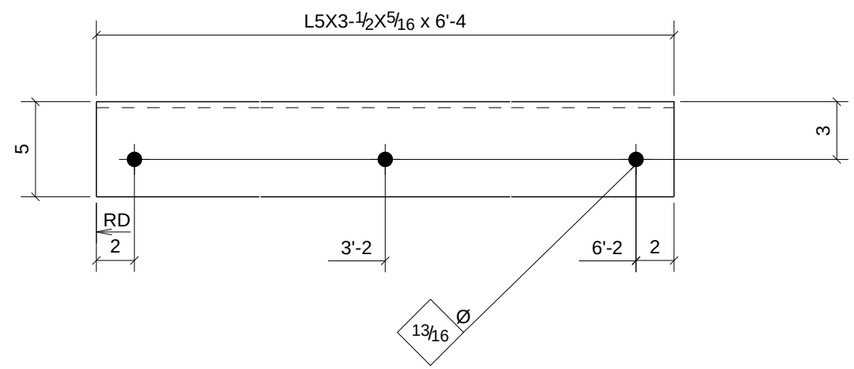

PROCESS CONTROL
PROCESS BY
FAB: _____
FIT AND WELD: _____
INSPECTION: _____
OTHER (IF NEEDED)
_____ : _____
_____ : _____
_____ : _____
_____ : _____
_____ : _____
REFERENCE LATEST ERECTION DRAWINGS FOR MATERIAL & FABRICATION INFORMATION

ONE - ANGLE - A85

DATE	NO.	DESCRIPTION	BY
5/28/11	B	For Checking	TMc
5/16/11	A	For Approval	TMc

BILL OF MATERIAL

Qty Ea.	Qty Tot	Piece Mark	Description	Length	Weight Total	Remarks	Adv Mill #	Steel Grade
	1	A85	ANGLE					
	1		L5X3-1/2X5/16	6'-4"	55	SQ-2		A36

STEEL ASTM	A992		UNO
ELECTRODES	E70XX L.H.		UNO
WELDS	1/4" FILLET		UNO
OPEN HOLES	13/16"	UNO	FINISH PER SPECS
BOLTS	3/4" A325N		UNO
PAINT	1 S/C STD PRIMER U.N.O.		UNO

PROJECT NAME
OLDE ORCHARD ELEMENTARY SCHOOL

LOCATION
800 McNAUGHTEN RD. COLUMBUS, OHIO 43213

CONTRACTOR
THOMAS AND MARKER CONSTRUCTION

ARCHITECT
BRAUN & STEIDL

North Central Fabrication, Ltd.

NORTH CENTRAL FABRICATION
Mansfield, OH 44906
419-529-2744 FAX 419-529-5387 http://www.northcentralfab

AISC CERTIFIED FABRICATOR

DESCRIPTION	DATE		JOB No.
ANGLE	05/17/2011		70234
	DRAWN BY TMc	CHECKED BY TAN	DRG No. A85

PHASE				
1	2	3	4	5
1	0	0	0	0

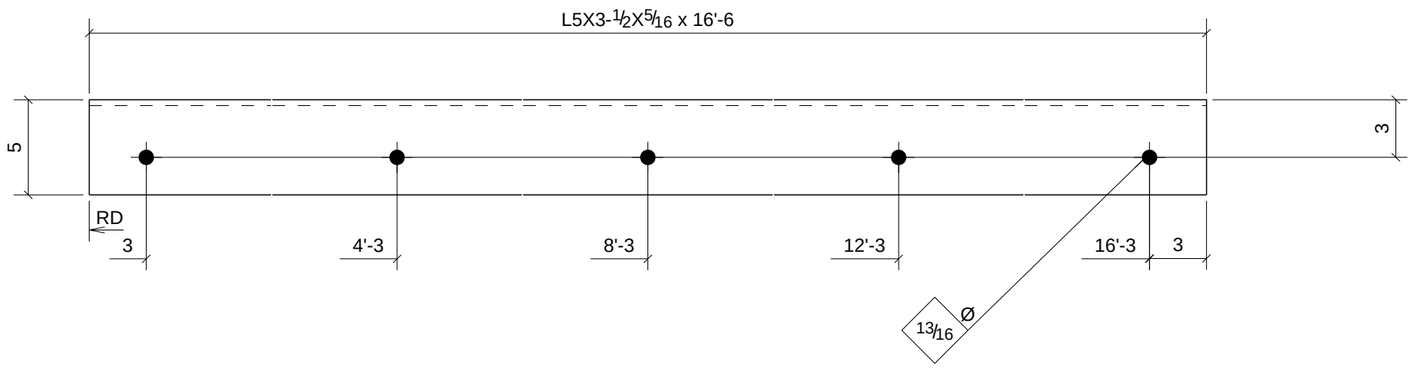

PROCESS CONTROL
PROCESS BY
FAB: _____
FIT AND WELD: _____
INSPECTION: _____
OTHER (IF NEEDED) _____
_____ : _____
_____ : _____
_____ : _____
_____ : _____
REFERENCE LATEST ERECTION DRAWINGS FOR MATERIAL & FABRICATION INFORMATION

ONE - ANGLE - A86

DATE	NO.	DESCRIPTION	BY
5/28/11	B	For Checking	TMc
5/16/11	A	For Approval	TMc

BILL OF MATERIAL

Qty Ea.	Qty Tot	Piece Mark	Description	Length	Weight Total	Remarks	Adv Mill #	Steel Grade
	1	A86	ANGLE					
	1		L5X3-1/2X5/16	16'-6"	144	SQ-2		A36

STEEL ASTM	A992	UNO
ELECTRODES	E70XX L.H.	UNO
WELDS	1/4" FILLET	UNO
OPEN HOLES	13/16" UNO	FINISH PER SPECS
BOLTS	3/4" A325N	UNO
PAINT	1 S/C STD PRIMER U.N.O.	UNO

PROJECT NAME
OLDE ORCHARD ELEMENTARY SCHOOL

LOCATION
800 McNAUGHTEN RD. COLUMBUS, OHIO 43213

CONTRACTOR
THOMAS AND MARKER CONSTRUCTION

ARCHITECT
BRAUN & STEIDL

North Central Fabrication, Ltd.

NORTH CENTRAL FABRICATION
Mansfield, OH 44906
419-529-2744 FAX 419-529-5387 http://www.northcentralfab

AISC CERTIFIED FABRICATOR

DESCRIPTION	DATE	DATE	JOB No.
ANGLE	05/17/2011		70234
	DRAWN BY TMc	CHECKED BY TAN	DRG No. A86

PHASE				
1	2	3	4	5
1	0	0	0	0

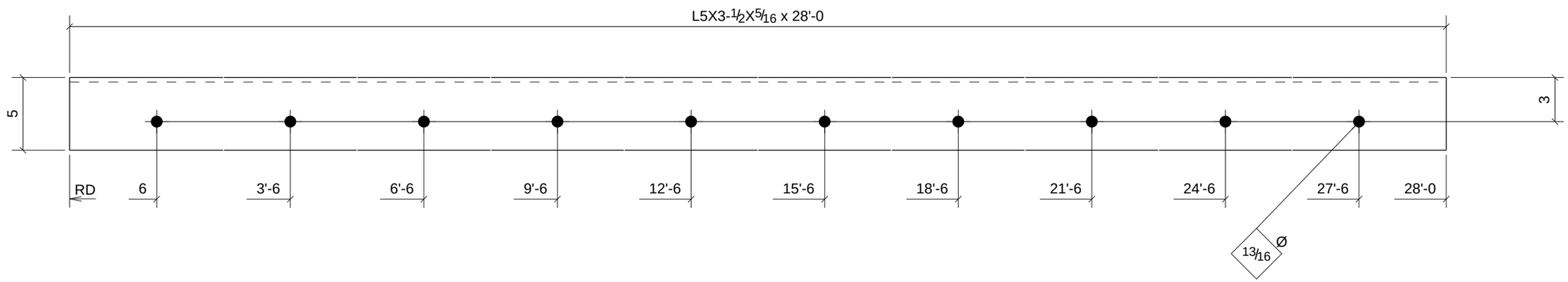

PROCESS CONTROL
PROCESS BY
FAB: _____
FIT AND WELD: _____
INSPECTION: _____
OTHER (IF NEEDED) _____
_____ : _____
_____ : _____
_____ : _____
_____ : _____
_____ : _____
REFERENCE LATEST ERECTION DRAWINGS FOR MATERIAL & FABRICATION INFORMATION

ONE - ANGLE - A87

DATE	NO.	DESCRIPTION	BY
5/28/11	B	For Checking	TMc
5/16/11	A	For Approval	TMc

BILL OF MATERIAL

Qty Ea.	Qty Tot	Piece Mark	Description	Length	Weight Total	Remarks	Adv Mill #	Steel Grade
	1	A87	ANGLE					
	1		L5X3-1/2X5/16	28'-0"	244	SQ-2		A36

STEEL ASTM	A992	UNO
ELECTRODES	E70XX L.H.	UNO
WELDS	1/4" FILLET	UNO
OPEN HOLES	13/16" UNO	FINISH PER SPECS
BOLTS	3/4" A325N	UNO
PAINT	1 S/C STD PRIMER U.N.O.	UNO

PROJECT NAME
OLDE ORCHARD ELEMENTARY SCHOOL
LOCATION
800 McNAUGHTEN RD. COLUMBUS, OHIO 43213
CONTRACTOR
THOMAS AND MARKER CONSTRUCTION
ARCHITECT
BRAUN & STEIDL

North Central Fabrication, Ltd.
NORTH CENTRAL FABRICATION
Mansfield, OH 44906
419-529-2744 FAX 419-529-5387 http://www.northcentralfab
AISC CERTIFIED FABRICATOR

DESCRIPTION	DATE	DATE	JOB No.
ANGLE	05/17/2011		70234
	DRAWN BY TMc	CHECKED BY TAN	DRG No. A87

PHASE				
1	2	3	4	5
1	0	0	0	0

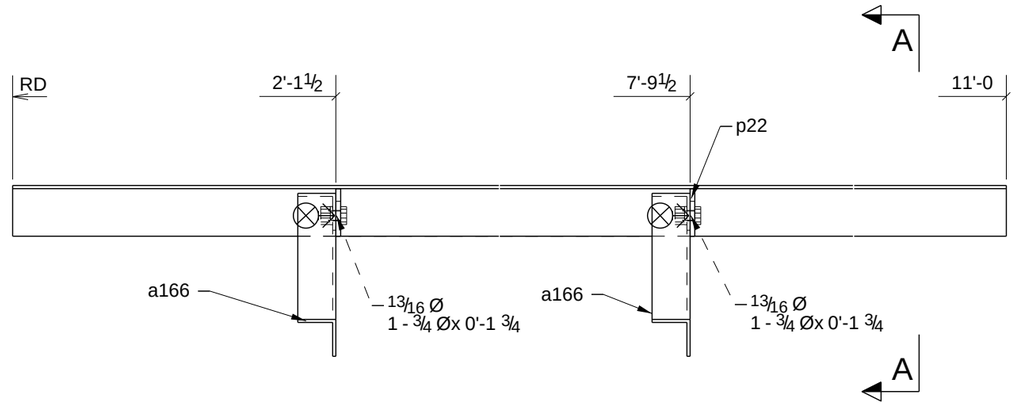

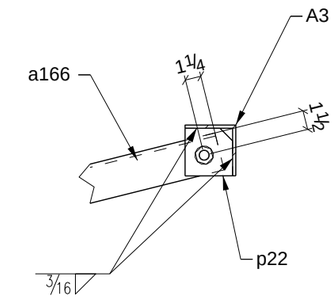

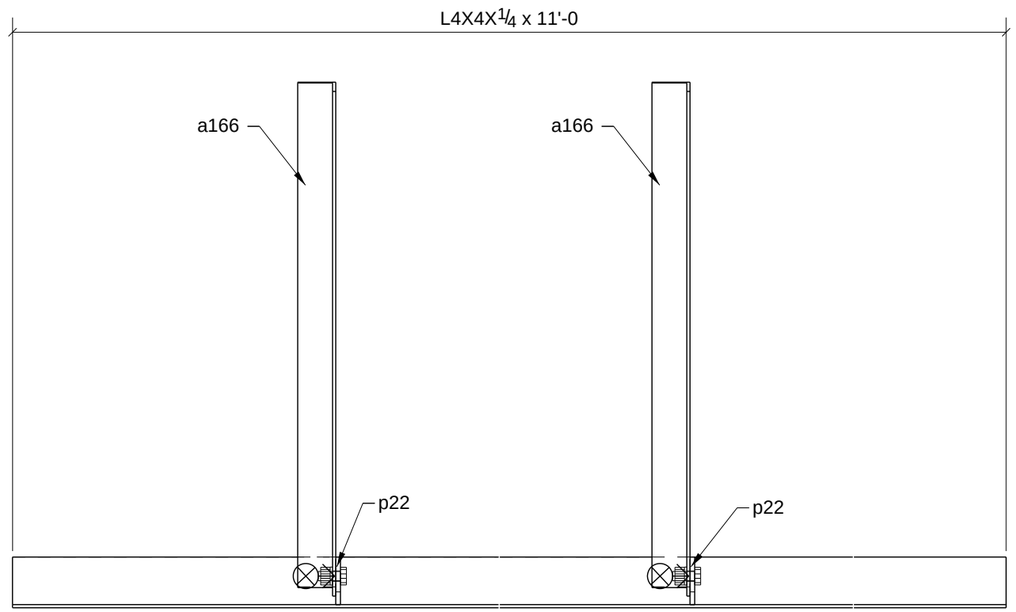

A - A

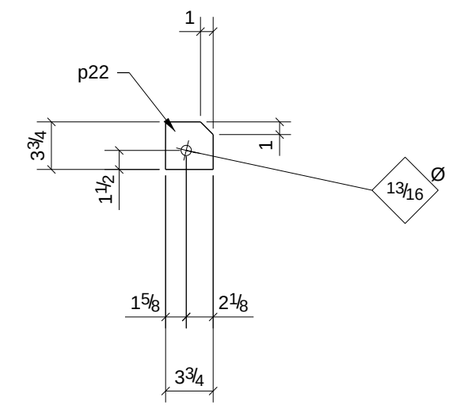

PROCESS CONTROL
PROCESS BY
FAB: _____
FIT AND WELD: _____
INSPECTION: _____
OTHER (IF NEEDED) _____
_____ : _____
_____ : _____
_____ : _____
_____ : _____
REFERENCE LATEST ERECTION DRAWINGS FOR MATERIAL & FABRICATION INFORMATION

ONE - ANGLE - A3

BILL OF MATERIAL

Qty Ea.	Qty Tot	Piece Mark	Description	Length	Weight Total	Remarks	Adv Mill #	Steel Grade
	1	A3	ANGLE					
	1		L4X4X1/4	11'-0"	73	SQ-2		A36
	2	a166	L3X3X1/4	3'-5"	33			A36
	2	p22	BAR3/8"X3 3/4"	0'-3 3/4"	3			A36
	2		3/4"Ø A325N BOLT	0'-1 3/4"	1			

STEEL ASTM	A992		UNO
ELECTRODES	E70XX L.H.		UNO
WELDS	1/4" FILLET		UNO
OPEN HOLES	13/16"	UNO	FINISH PER SPECS
BOLTS	3/4" A325N		UNO
PAINT	1 S/C STD PRIMER U.N.O.		UNO

PROJECT NAME
OLDE ORCHARD ELEMENTARY SCHOOL
LOCATION
800 McNAUGHTEN RD. COLUMBUS, OHIO 43213
CONTRACTOR
THOMAS AND MARKER CONSTRUCTION
ARCHITECT
BRAUN & STEIDL

DATE	NO.	DESCRIPTION	BY
5/28/11	B	For Checking	TMc
5/28/11	A	For Checking	TMc

North Central Fabrication, Ltd.

NORTH CENTRAL FABRICATION
Mansfield, OH 44906
419-529-2744 FAX 419-529-5387 http://www.northcentralfab

AISC CERTIFIED FABRICATOR

DESCRIPTION	DATE	DATE	JOB No.
ANGLE BRACE	05/28/2011		70234
	DRAWN BY	CHECKED BY	DRG No. A3

PHASE				
1	2	3	4	5
2	0	0	0	0

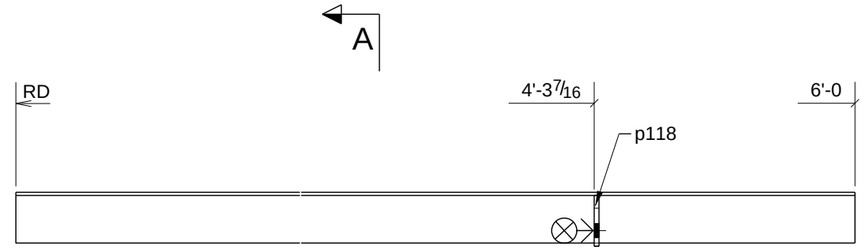

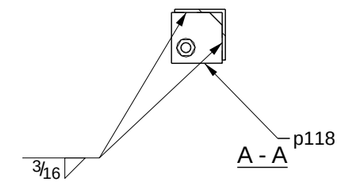

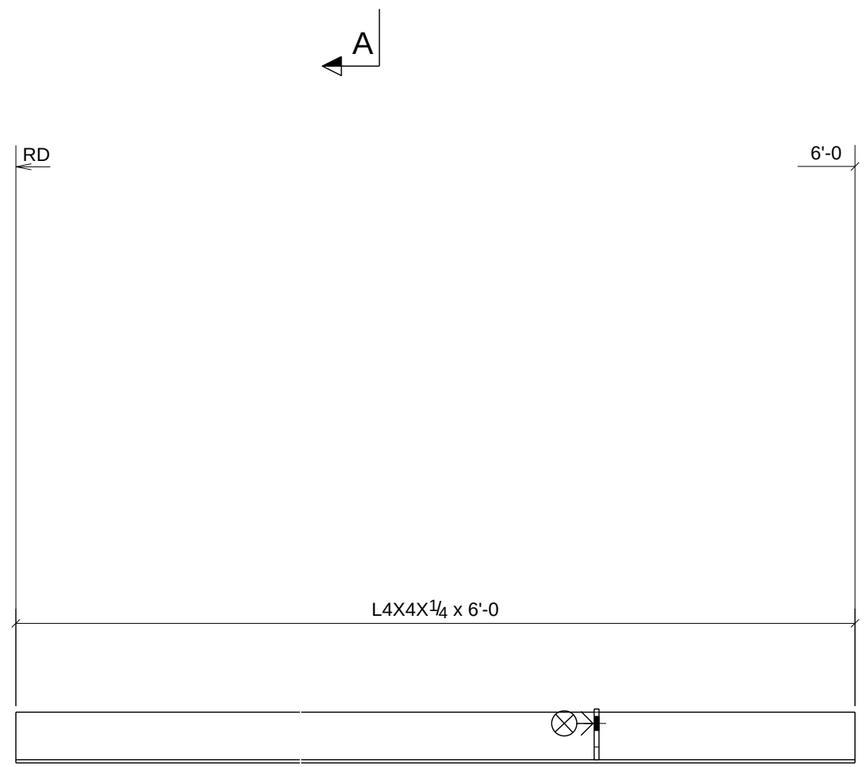

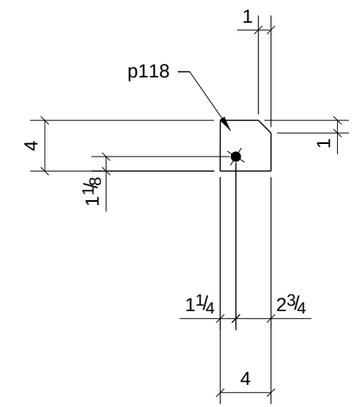

PROCESS CONTROL
PROCESS BY
FAB: _____
FIT AND WELD: _____
INSPECTION: _____
OTHER (IF NEEDED)
_____ : _____
_____ : _____
_____ : _____
_____ : _____
REFERENCE LATEST ERECTION DRAWINGS FOR MATERIAL & FABRICATION INFORMATION

2 - ANGLES - A8

DATE	NO.	DESCRIPTION	BY
5/28/11	B	For Checking	TMc
5/16/11	A	For Approval	TMc

BILL OF MATERIAL

Qty Ea.	Qty Tot	Piece Mark	Description	Length	Weight Total	Remarks	Adv Mill #	Steel Grade
	2	A8	ANGLES					
	2		L4X4X1/4	6'-0"	79	SQ-2		A36
	2	p118	BAR3/8"X4"	0'-4"	3			A36

STEEL ASTM	A992	UNO
ELECTRODES	E70XX L.H.	UNO
WELDS	1/4" FILLET	UNO
OPEN HOLES	13/16" UNO	FINISH PER SPECS
BOLTS	3/4" A325N	UNO
PAINT	1 S/C STD PRIMER U.N.O.	UNO

PROJECT NAME
OLDE ORCHARD ELEMENTARY SCHOOL
LOCATION
800 McNAUGHTEN RD. COLUMBUS, OHIO 43213
CONTRACTOR
THOMAS AND MARKER CONSTRUCTION
ARCHITECT
BRAUN & STEIDL

North Central Fabrication, Ltd.
NORTH CENTRAL FABRICATION
Mansfield, OH 44906
419-529-2744 FAX 419-529-5387 http://www.northcentralfab
AISC CERTIFIED FABRICATOR

DESCRIPTION	DATE	DATE	JOB No.
ANGLE BRACE	05/18/2011		70234
	DRAWN BY TMc	CHECKED BY TAN	DRG No. A8

PHASE				
1	2	3	4	5
2	0	0	0	0

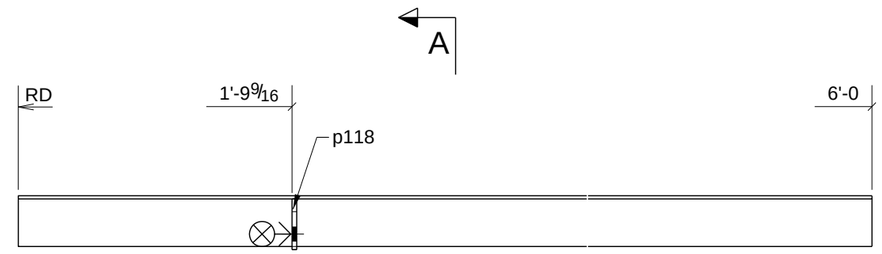

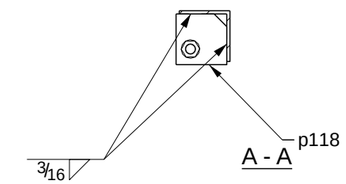

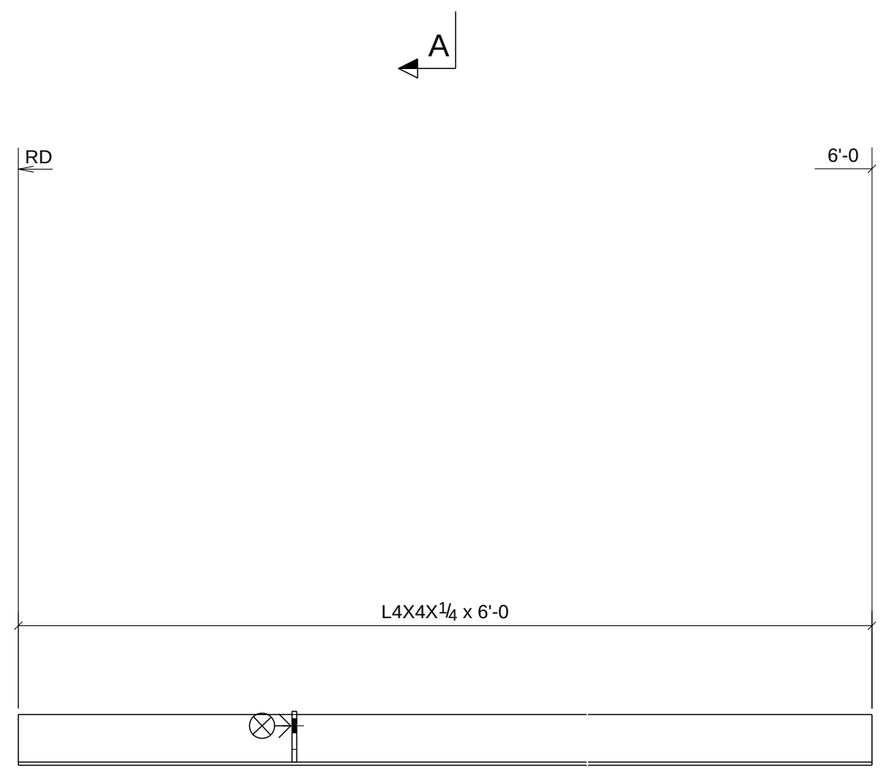

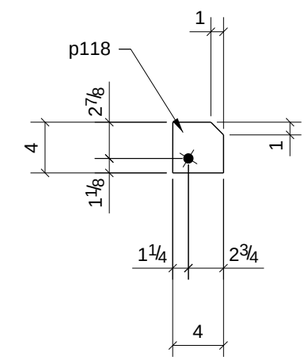

PROCESS CONTROL
PROCESS BY
FAB: _____
FIT AND WELD: _____
INSPECTION: _____
OTHER (IF NEEDED)
_____ : _____
_____ : _____
_____ : _____
_____ : _____
REFERENCE LATEST ERECTION DRAWINGS FOR MATERIAL & FABRICATION INFORMATION

2 - ANGLES - A9

DATE	NO.	DESCRIPTION	BY
5/28/11	B	For Checking	TMc
5/16/11	A	For Approval	TMc

BILL OF MATERIAL

Qty Ea.	Qty Tot	Piece Mark	Description	Length	Weight Total	Remarks	Adv Mill #	Steel Grade
	2	A9	ANGLES					
	2		L4X4X1/4	6'-0"	79	SQ-2		A36
	2	p118	BAR3/8"X4"	0'-4"	3			A36

STEEL ASTM	A992	UNO
ELECTRODES	E70XX L.H.	UNO
WELDS	1/4" FILLET	UNO
OPEN HOLES	13/16" UNO	FINISH PER SPECS
BOLTS	3/4" A325N	UNO
PAINT	1 S/C STD PRIMER U.N.O.	UNO

PROJECT NAME
OLDE ORCHARD ELEMENTARY SCHOOL

LOCATION
800 McNAUGHTEN RD. COLUMBUS, OHIO 43213

CONTRACTOR
THOMAS AND MARKER CONSTRUCTION

ARCHITECT
BRAUN & STEIDL

North Central Fabrication, Ltd.
NORTH CENTRAL FABRICATION
Mansfield, OH 44906
419-529-2744 FAX 419-529-5387 http://www.northcentralfab
AISC CERTIFIED FABRICATOR

DESCRIPTION	DATE	DATE	JOB No.
ANGLE BRACE	05/18/2011		70234
	DRAWN BY TMc	CHECKED BY TAN	DRG No. A9

PHASE				
1	2	3	4	5
2	0	0	0	0

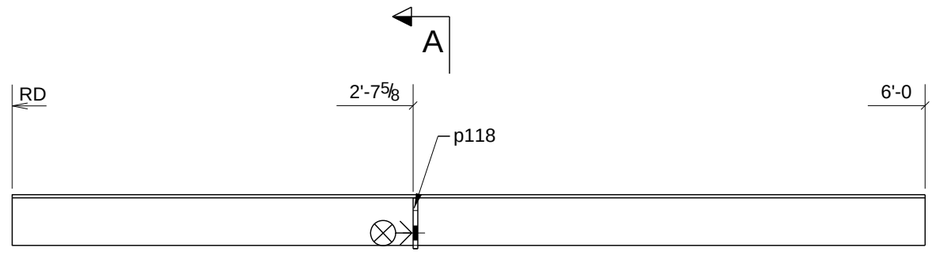

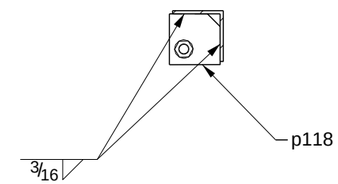

A - A

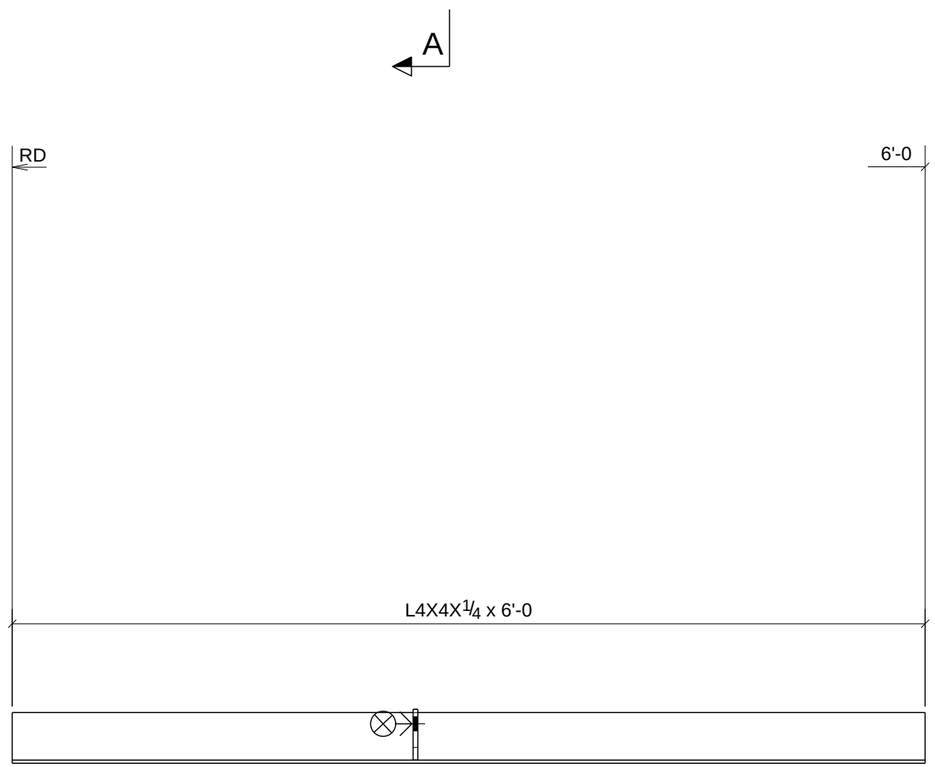

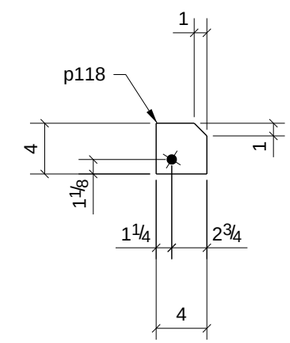

PROCESS CONTROL
PROCESS BY
FAB: _____
FIT AND WELD: _____
INSPECTION: _____
OTHER (IF NEEDED) _____
_____ : _____
_____ : _____
_____ : _____
_____ : _____
REFERENCE LATEST ERECTION DRAWINGS FOR MATERIAL & FABRICATION INFORMATION

2 - ANGLES - A10

DATE	NO.	DESCRIPTION	BY
5/28/11	B	For Checking	TMc
5/16/11	A	For Approval	TMc

BILL OF MATERIAL

Qty Ea.	Qty Tot	Piece Mark	Description	Length	Weight Total	Remarks	Adv Mill #	Steel Grade
	2	A10	ANGLES					
	2		L4X4X1/4	6'-0"	79	SQ-2		A36
	2	p118	BAR3/8"X4"	0'-4"	3			A36

STEEL ASTM	A992	UNO
ELECTRODES	E70XX L.H.	UNO
WELDS	1/4" FILLET	UNO
OPEN HOLES	13/16" UNO	FINISH PER SPECS
BOLTS	3/4" A325N	UNO
PAINT	1 S/C STD PRIMER U.N.O.	UNO

PROJECT NAME
OLDE ORCHARD ELEMENTARY SCHOOL

LOCATION
800 McNAUGHTEN RD. COLUMBUS, OHIO 43213

CONTRACTOR
THOMAS AND MARKER CONSTRUCTION

ARCHITECT
BRAUN & STEIDL

North Central Fabrication, Ltd.
NORTH CENTRAL FABRICATION
Mansfield, OH 44906
419-529-2744 FAX 419-529-5387 http://www.northcentralfab
AISC CERTIFIED FABRICATOR

DESCRIPTION	DATE	DATE	JOB No.
ANGLE BRACE	05/18/2011		70234
	DRAWN BY TMc	CHECKED BY TAN	DRG No. A10

PHASE				
1	2	3	4	5
2	0	0	0	0

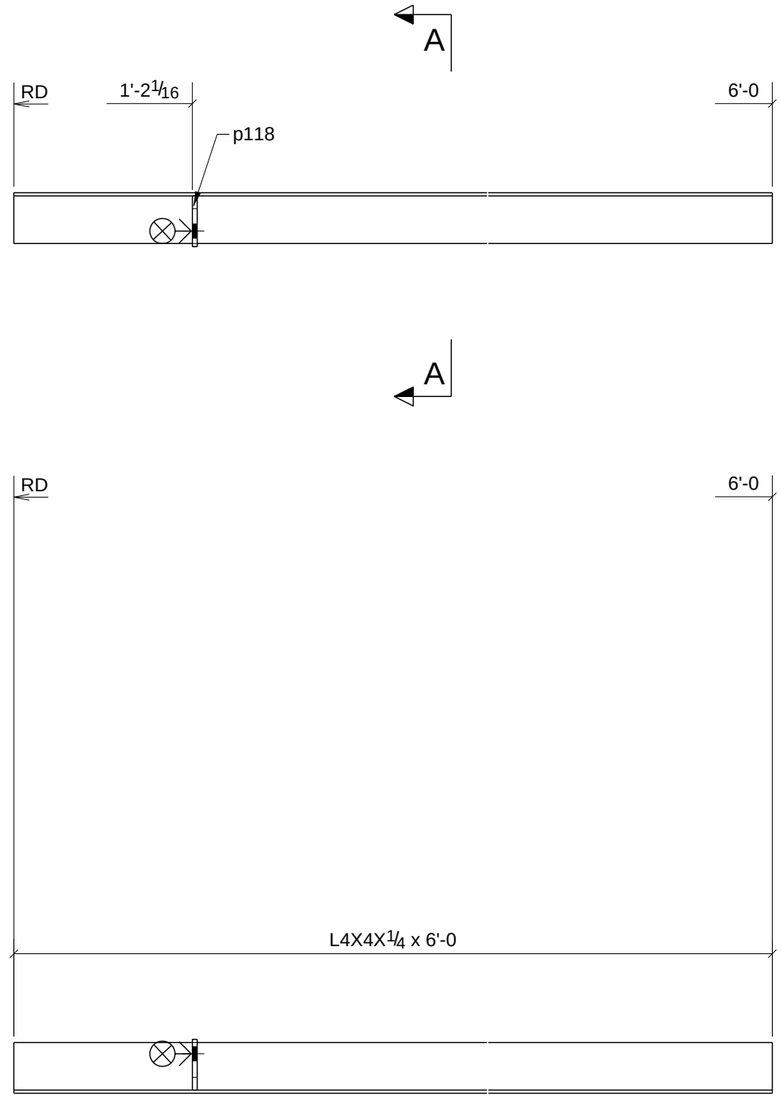

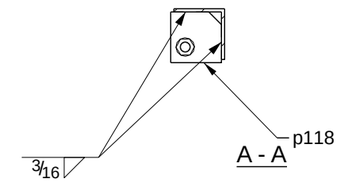

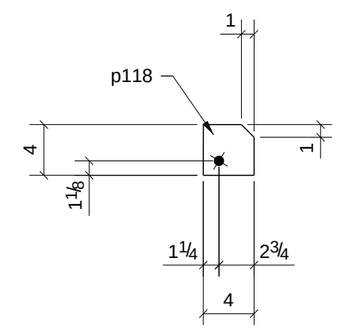

PROCESS CONTROL
PROCESS BY
FAB: _____
FIT AND WELD: _____
INSPECTION: _____
OTHER (IF NEEDED) _____
_____ : _____
_____ : _____
_____ : _____
_____ : _____
REFERENCE LATEST ERECTION DRAWINGS FOR MATERIAL & FABRICATION INFORMATION

2 - ANGLES - A12

DATE	NO.	DESCRIPTION	BY
5/28/11	B	For Checking	TMc
5/16/11	A	For Approval	TMc

BILL OF MATERIAL

Qty Ea.	Qty Tot	Piece Mark	Description	Length	Weight Total	Remarks	Adv Mill #	Steel Grade
	2	A12	ANGLES					
	2		L4X4X1/4	6'-0"	79	SQ-2		A36
	2	p118	BAR3/8"X4"	0'-4"	3			A36

STEEL ASTM	A992	UNO
ELECTRODES	E70XX L.H.	UNO
WELDS	1/4" FILLET	UNO
OPEN HOLES	13/16" UNO	FINISH PER SPECS
BOLTS	3/4" A325N	UNO
PAINT	1 S/C STD PRIMER U.N.O.	UNO

PROJECT NAME
OLDE ORCHARD ELEMENTARY SCHOOL

LOCATION
800 McNAUGHTEN RD. COLUMBUS, OHIO 43213

CONTRACTOR
THOMAS AND MARKER CONSTRUCTION

ARCHITECT
BRAUN & STEIDL

North Central Fabrication, Ltd.
NORTH CENTRAL FABRICATION
Mansfield, OH 44906
419-529-2744 FAX 419-529-5387 http://www.northcentralfab
AISC CERTIFIED FABRICATOR

DESCRIPTION	DATE	DATE	JOB No.
ANGLE BRACE	05/18/2011		70234
	DRAWN BY TMc	CHECKED BY TAN	DRG No. A12

PHASE				
1	2	3	4	5
1	0	0	0	0

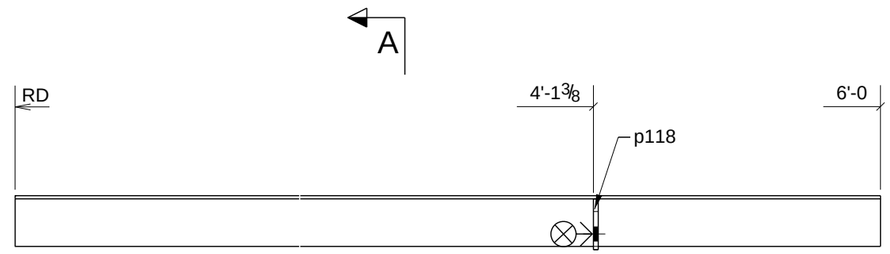

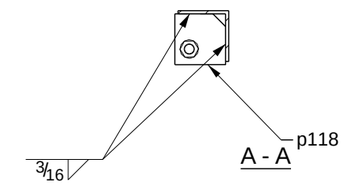

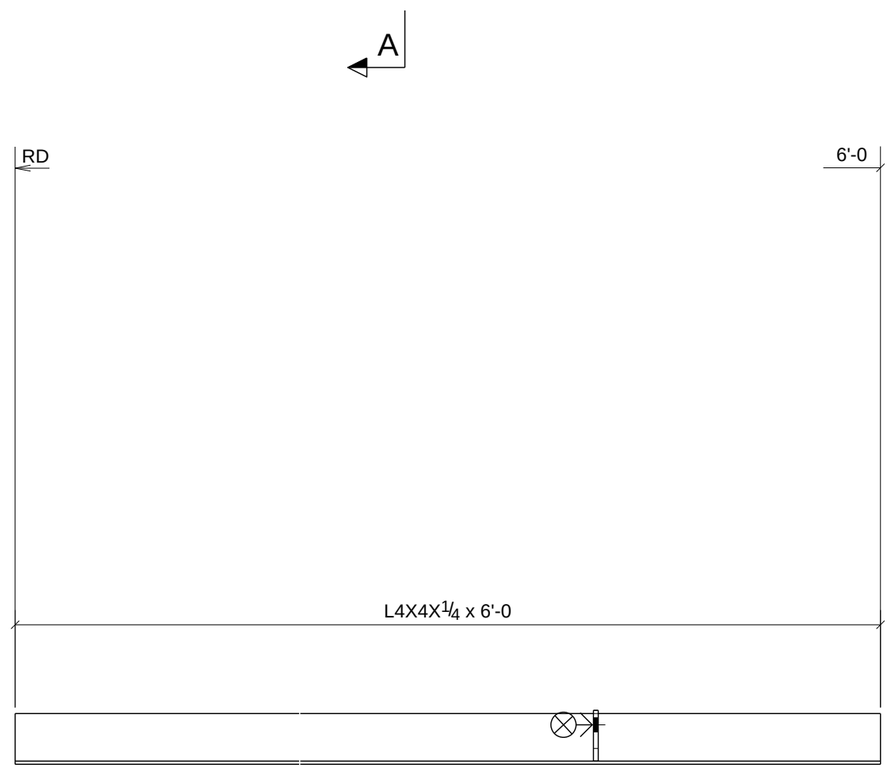

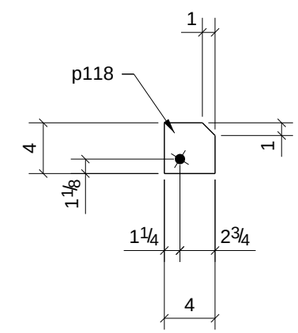

PROCESS CONTROL
PROCESS BY
FAB: _____
FIT AND WELD: _____
INSPECTION: _____
OTHER (IF NEEDED) _____
_____ : _____
_____ : _____
_____ : _____
_____ : _____
REFERENCE LATEST ERECTION DRAWINGS FOR MATERIAL & FABRICATION INFORMATION

ONE - ANGLE - A13

DATE	NO.	DESCRIPTION	BY
5/28/11	B	For Checking	TMc
5/16/11	A	For Approval	TMc

BILL OF MATERIAL

Qty Ea.	Qty Tot	Piece Mark	Description	Length	Weight Total	Remarks	Adv Mill #	Steel Grade
	1	A13	ANGLE					
	1		L4X4X1/4	6'-0"	40	SQ-2		A36
	1	p118	BAR3/8"X4"	0'-4"	2			A36

STEEL ASTM	A992	UNO
ELECTRODES	E70XX L.H.	UNO
WELDS	1/4" FILLET	UNO
OPEN HOLES	13/16" UNO	FINISH PER SPECS
BOLTS	3/4" A325N	UNO
PAINT	1 S/C STD PRIMER U.N.O.	UNO

PROJECT NAME
OLDE ORCHARD ELEMENTARY SCHOOL

LOCATION
800 McNAUGHTEN RD. COLUMBUS, OHIO 43213

CONTRACTOR
THOMAS AND MARKER CONSTRUCTION

ARCHITECT
BRAUN & STEIDL

North Central Fabrication, Ltd.
NORTH CENTRAL FABRICATION
Mansfield, OH 44906
419-529-2744 FAX 419-529-5387 http://www.northcentralfab
AISC CERTIFIED FABRICATOR

DESCRIPTION	DATE	DATE	JOB No.
ANGLE BRACE	05/18/2011		70234
	DRAWN BY TMc	CHECKED BY TAN	DRG No. A13

PHASE				
1	2	3	4	5
1	0	0	0	0

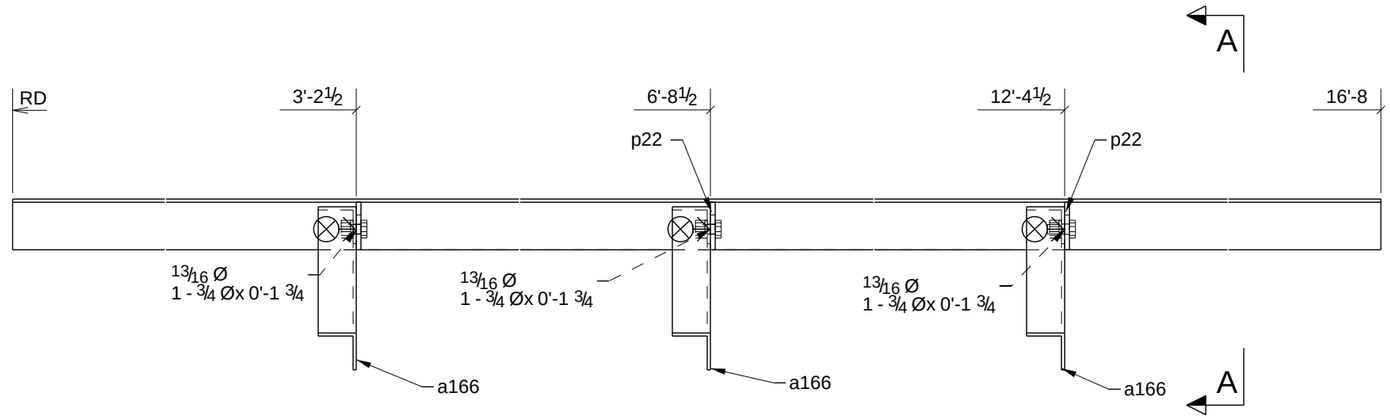

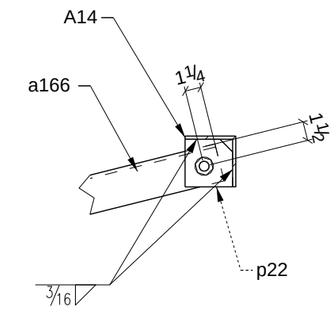

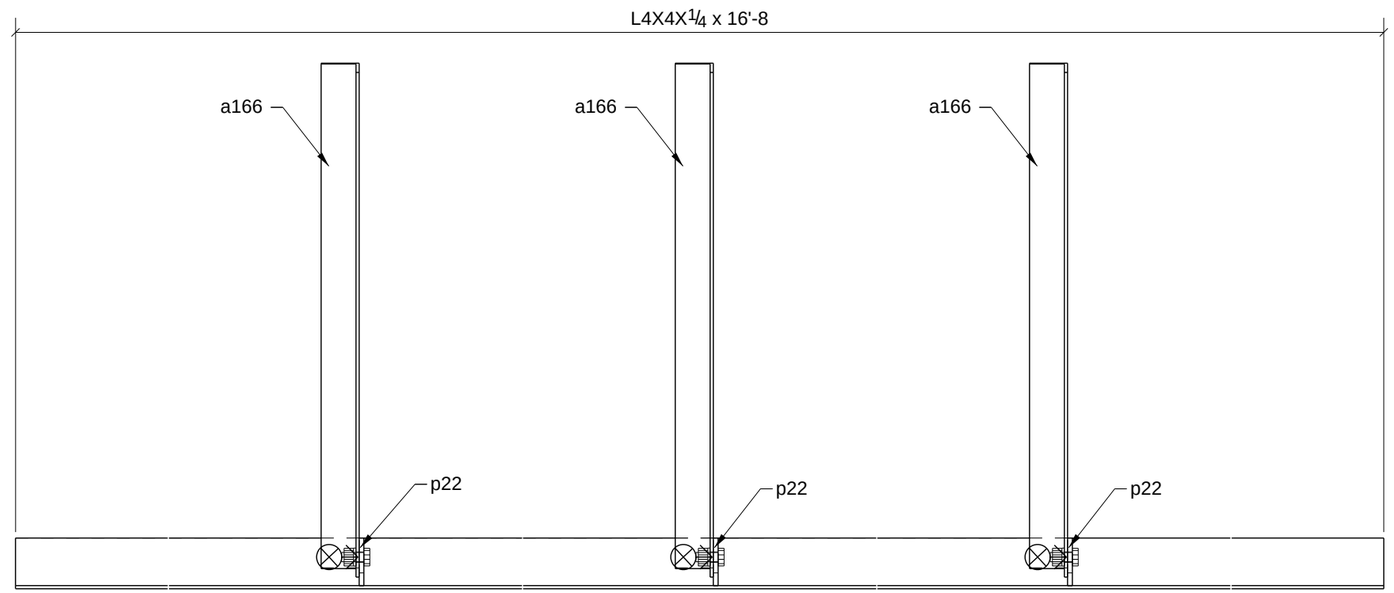

A - A

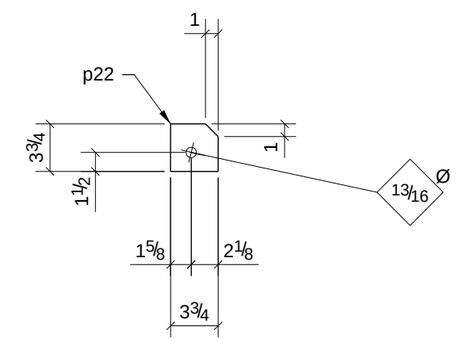

PROCESS CONTROL
PROCESS BY
FAB: _____
FIT AND WELD: _____
INSPECTION: _____
OTHER (IF NEEDED) _____
_____ : _____
_____ : _____
_____ : _____
_____ : _____
REFERENCE LATEST ERECTION DRAWINGS FOR MATERIAL & FABRICATION INFORMATION

ONE - ANGLE - A14

BILL OF MATERIAL

Qty Ea.	Qty Tot	Piece Mark	Description	Length	Weight Total	Remarks	Adv Mill #	Steel Grade
	1	A14	ANGLE					
	1		L4X4X1/4	16'-8"	110	SQ-2		A36
	3	a166	L3X3X1/4	3'-5"	50			A36
	3	p22	BAR3/8"X3 3/4"	0'-3 3/4"	4			A36
	3		3/4"Ø A325N BOLT	0'-1 3/4"	2			

STEEL ASTM	A992	UNO
ELECTRODES	E70XX L.H.	UNO
WELDS	1/4" FILLET	UNO
OPEN HOLES	13/16" UNO	FINISH PER SPECS
BOLTS	3/4" A325N	UNO
PAINT	1 S/C STD PRIMER U.N.O.	UNO

PROJECT NAME
OLDE ORCHARD ELEMENTARY SCHOOL
LOCATION
800 McNAUGHTEN RD. COLUMBUS, OHIO 43213
CONTRACTOR
THOMAS AND MARKER CONSTRUCTION
ARCHITECT
BRAUN & STEIDL

DATE	NO.	DESCRIPTION	BY
5/28/11	B	For Checking	TMc
5/28/11	A	For Checking	TMc

North Central Fabrication, Ltd.
NORTH CENTRAL FABRICATION
Mansfield, OH 44906
419-529-2744 FAX 419-529-5387 http://www.northcentralfab
AISC CERTIFIED FABRICATOR

DESCRIPTION	DATE	DATE	JOB No.
ANGLE BRACE	05/28/2011		70234
	DRAWN BY	CHECKED BY	DRG No. A14

PHASE				
1	2	3	4	5
1	0	0	0	0

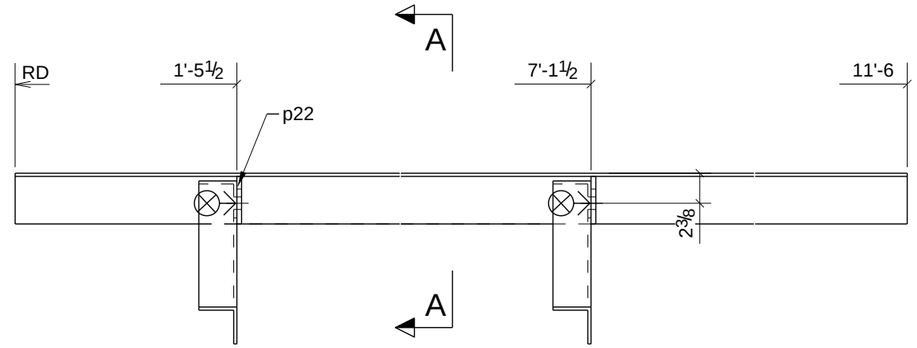

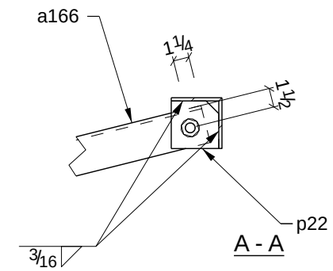

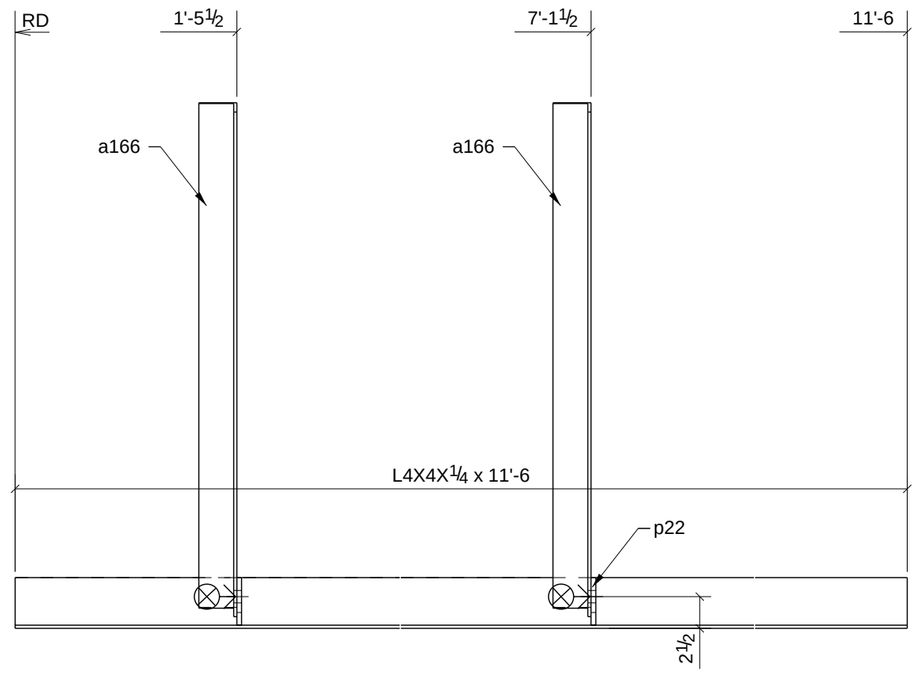

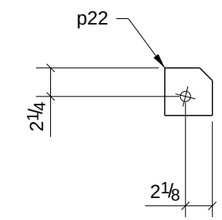

PROCESS CONTROL
PROCESS BY
FAB: _____
FIT AND WELD: _____
INSPECTION: _____
OTHER (IF NEEDED) _____
_____ : _____
_____ : _____
_____ : _____
_____ : _____
REFERENCE LATEST ERECTION DRAWINGS FOR MATERIAL & FABRICATION INFORMATION

ONE - ANGLE - A39

BILL OF MATERIAL

Qty Ea.	Qty Tot	Piece Mark	Description	Length	Weight Total	Remarks	Adv Mill #	Steel Grade
	1	A39	ANGLE					
	1		L4X4X1/4	11'-6"	76	SQ-2		A36
	2	a166	L3X3X1/4	3'-5"	33			A36
	2	p22	BAR3/8"X3 3/4"	0'-3 3/4"	3			A36
	2		3/4"Ø A325N BOLT	0'-1 3/4"	1			

STEEL ASTM	A992	UNO	
ELECTRODES	E70XX L.H.	UNO	
WELDS	1/4" FILLET	UNO	
OPEN HOLES	13/16" UNO	FINISH	PER SPECS
BOLTS	3/4" A325N	UNO	
PAINT	1 S/C STD PRIMER U.N.O.	UNO	

PROJECT NAME
OLDE ORCHARD ELEMENTARY SCHOOL

LOCATION
800 McNAUGHTEN RD. COLUMBUS, OHIO 43213

CONTRACTOR
THOMAS AND MARKER CONSTRUCTION

ARCHITECT
BRAUN & STEIDL

DATE	NO.	DESCRIPTION	BY
5/28/11	B	For Checking	TMc
5/16/11	A	For Approval	TMc

North Central Fabrication, Ltd.

NORTH CENTRAL FABRICATION
Mansfield, OH 44906
419-529-2744 FAX 419-529-5387 http://www.northcentralfab

AISC CERTIFIED FABRICATOR

DESCRIPTION	DATE	DATE	JOB No.
ANGLE BRACE	05/17/2011		70234
	DRAWN BY TMc	CHECKED BY TAN	DRG No. A39

PHASE				
1	2	3	4	5
1	0	0	0	0

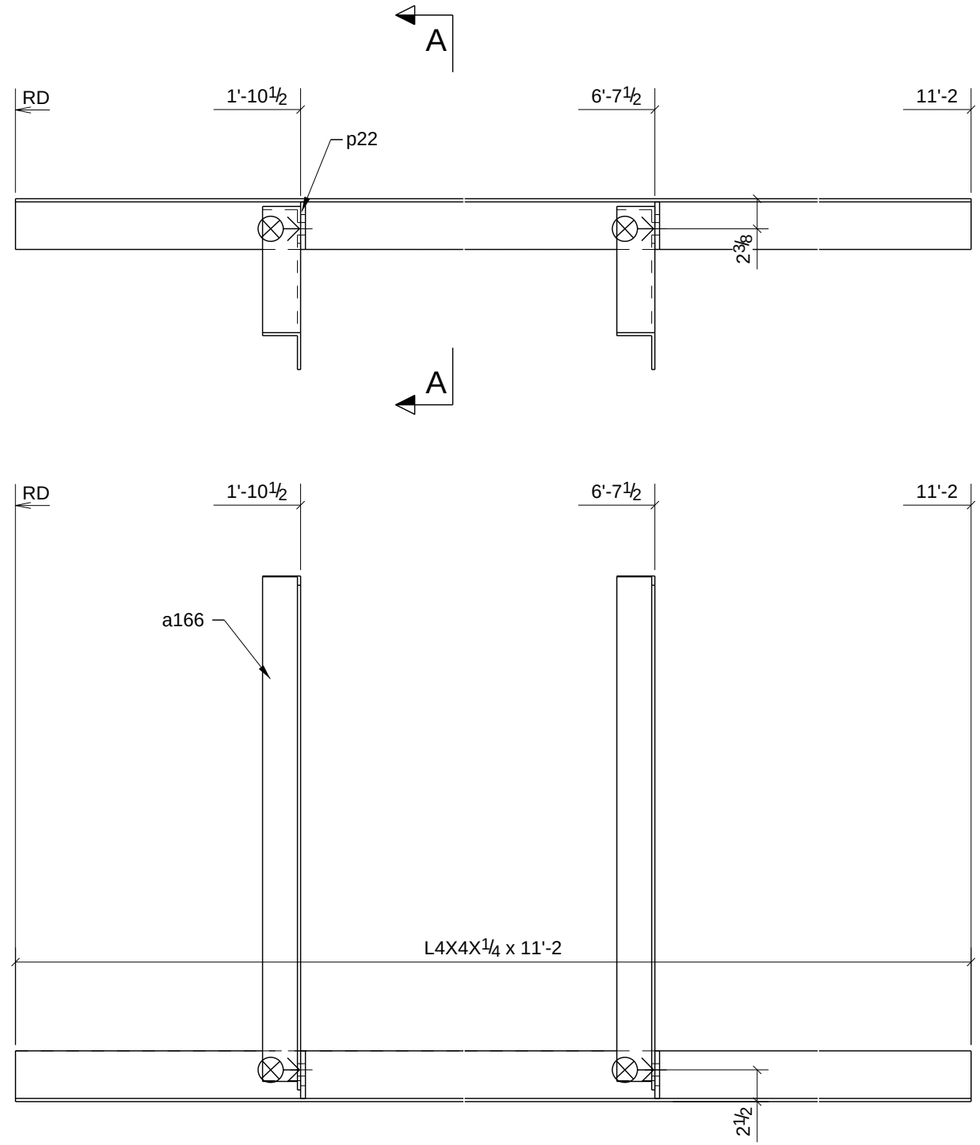

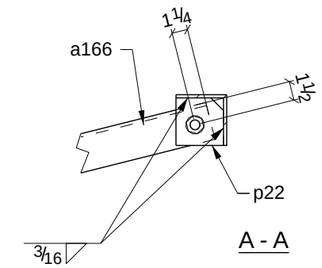

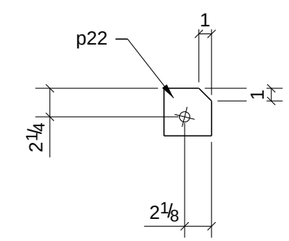

ONE - ANGLE - A44

PROCESS CONTROL
PROCESS BY
FAB: _____
FIT AND WELD: _____
INSPECTION: _____
OTHER (IF NEEDED) _____
_____ : _____
_____ : _____
_____ : _____
_____ : _____
REFERENCE LATEST ERECTION DRAWINGS FOR MATERIAL & FABRICATION INFORMATION

BILL OF MATERIAL

Qty Ea.	Qty Tot	Piece Mark	Description	Length	Weight Total	Remarks	Adv Mill #	Steel Grade
	1	A44	ANGLE					
	1		L4X4X1/4	11'-2"	74	SQ-2		A36
	2	a166	L3X3X1/4	3'-5"	33			A36
	2	p22	BAR3/8"X3 3/4"	0'-3 3/4"	3			A36
	2		3/4"Ø A325N BOLT	0'-1 3/4"	1			

STEEL ASTM	A992	UNO
ELECTRODES	E70XX L.H.	UNO
WELDS	1/4" FILLET	UNO
OPEN HOLES	13/16" UNO	FINISH PER SPECS
BOLTS	3/4" A325N	UNO
PAINT	1 S/C STD PRIMER U.N.O.	UNO

PROJECT NAME
OLDE ORCHARD ELEMENTARY SCHOOL
LOCATION
800 McNAUGHTEN RD. COLUMBUS, OHIO 43213
CONTRACTOR
THOMAS AND MARKER CONSTRUCTION
ARCHITECT
BRAUN & STEIDL

DATE	NO.	DESCRIPTION	BY
5/28/11	B	For Checking	TMc
5/16/11	A	For Approval	TMc

North Central Fabrication, Ltd.

NORTH CENTRAL FABRICATION
Mansfield, OH 44906
419-529-2744 FAX 419-529-5387 http://www.northcentralfab

AISC CERTIFIED FABRICATOR

DESCRIPTION	DATE	DATE	JOB No.
ANGLE BRACE	05/18/2011		70234
	DRAWN BY TMc	CHECKED BY TAN	DRG No. A44

PHASE				
1	2	3	4	5
1	0	0	0	0

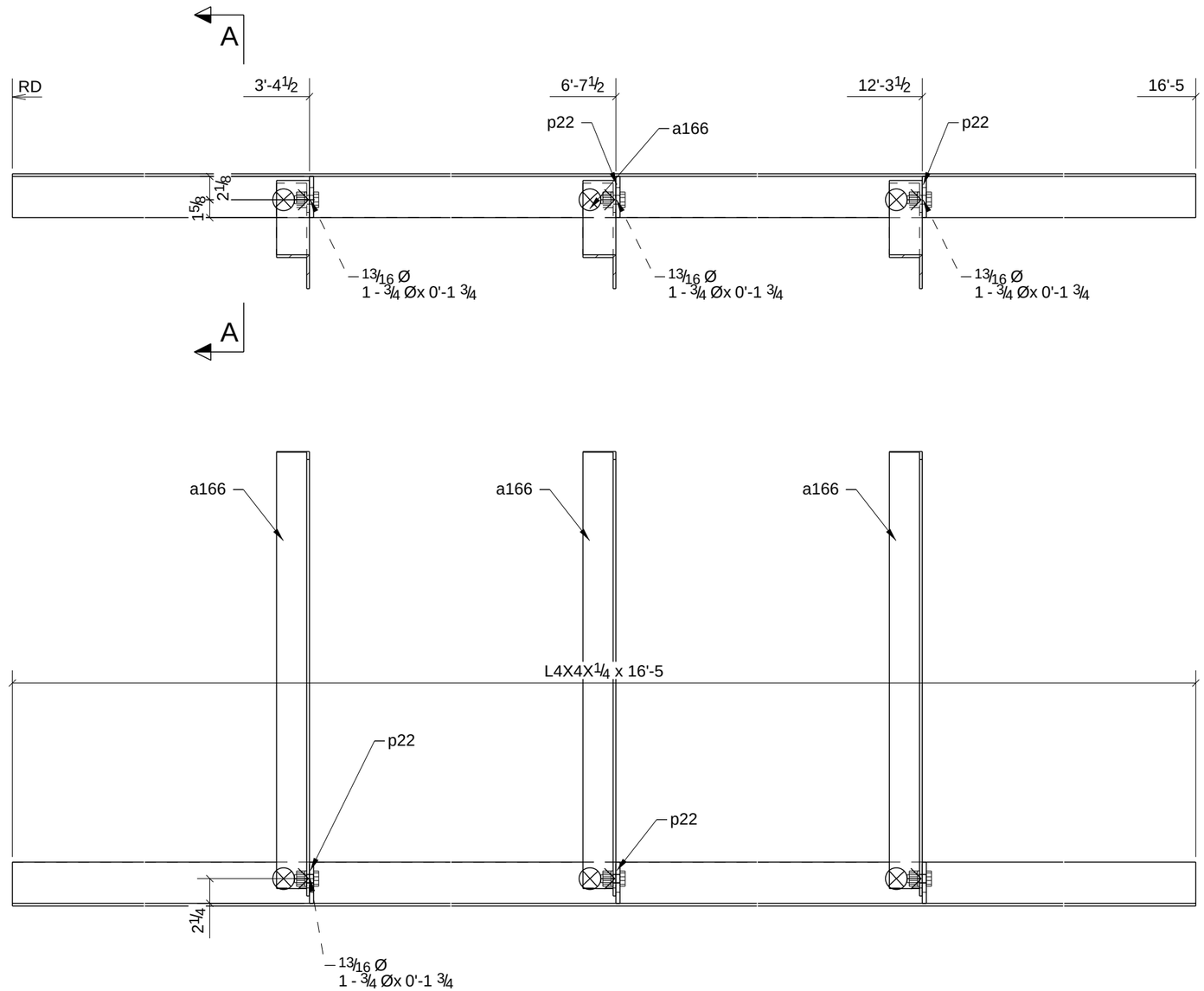

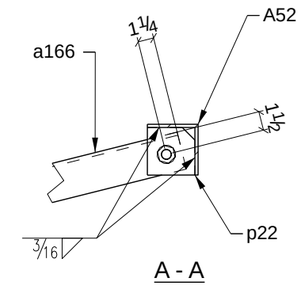

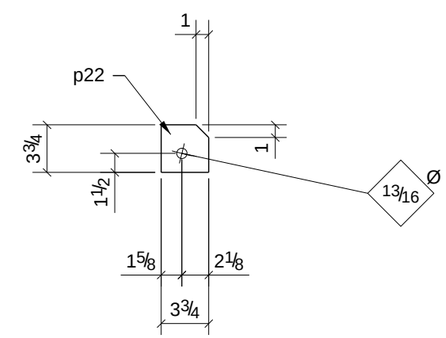

PROCESS CONTROL
PROCESS BY
FAB: _____
FIT AND WELD: _____
INSPECTION: _____
OTHER (IF NEEDED) _____
_____ : _____
_____ : _____
_____ : _____
_____ : _____
_____ : _____
REFERENCE LATEST ERECTION DRAWINGS FOR MATERIAL & FABRICATION INFORMATION

ONE - ANGLE - A52

BILL OF MATERIAL

Qty Ea.	Qty Tot	Piece Mark	Description	Length	Weight Total	Remarks	Adv Mill #	Steel Grade
	1	A52	ANGLE					
	1		L4X4X1/4	16'-5"	108	SQ-2		A36
	3	a166	L3X3X1/4	3'-5"	50			A36
	3	p22	BAR3/8"X3 3/4"	0'-3 3/4"	4			A36
	3		3/4"Ø A325N BOLT	0'-1 3/4"	2			

STEEL ASTM	A992		UNO
ELECTRODES	E70XX L.H.		UNO
WELDS	1/4" FILLET		UNO
OPEN HOLES	13/16" UNO	FINISH	PER SPECS
BOLTS	3/4" A325N		UNO
PAINT	1 S/C STD PRIMER U.N.O.		UNO

PROJECT NAME
OLDE ORCHARD ELEMENTARY SCHOOL
LOCATION
800 McNAUGHTEN RD. COLUMBUS, OHIO 43213
CONTRACTOR
THOMAS AND MARKER CONSTRUCTION
ARCHITECT
BRAUN & STEIDL

DATE	NO.	DESCRIPTION	BY
5/28/11	B	For Checking	TMc
5/16/11	A	For Approval	TMc

North Central Fabrication, Ltd.

NORTH CENTRAL FABRICATION
Mansfield, OH 44906
419-529-2744 FAX 419-529-5387 http://www.northcentralfab

AISC CERTIFIED FABRICATOR

DESCRIPTION	DATE	DATE	JOB No.
ANGLE BRACE	05/18/2011		70234
	DRAWN BY TMc	CHECKED BY TAN	DRG No. A52

PHASE				
1	2	3	4	5
1	0	0	0	0

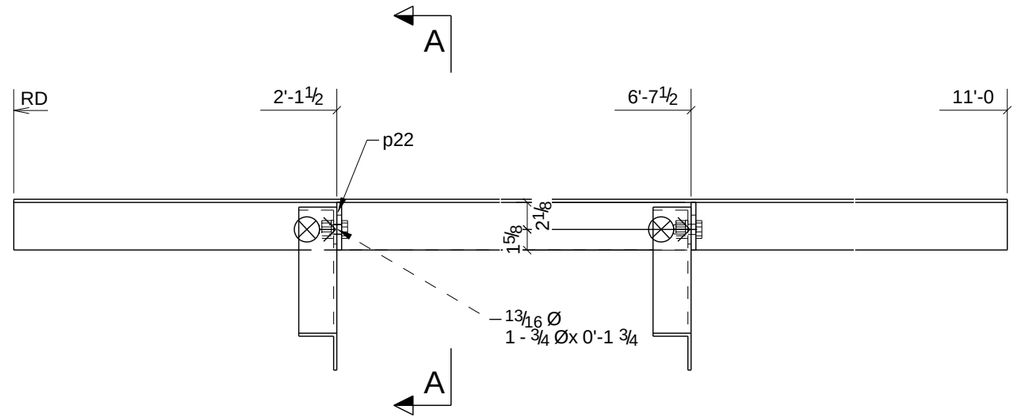

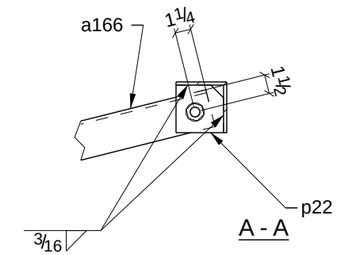

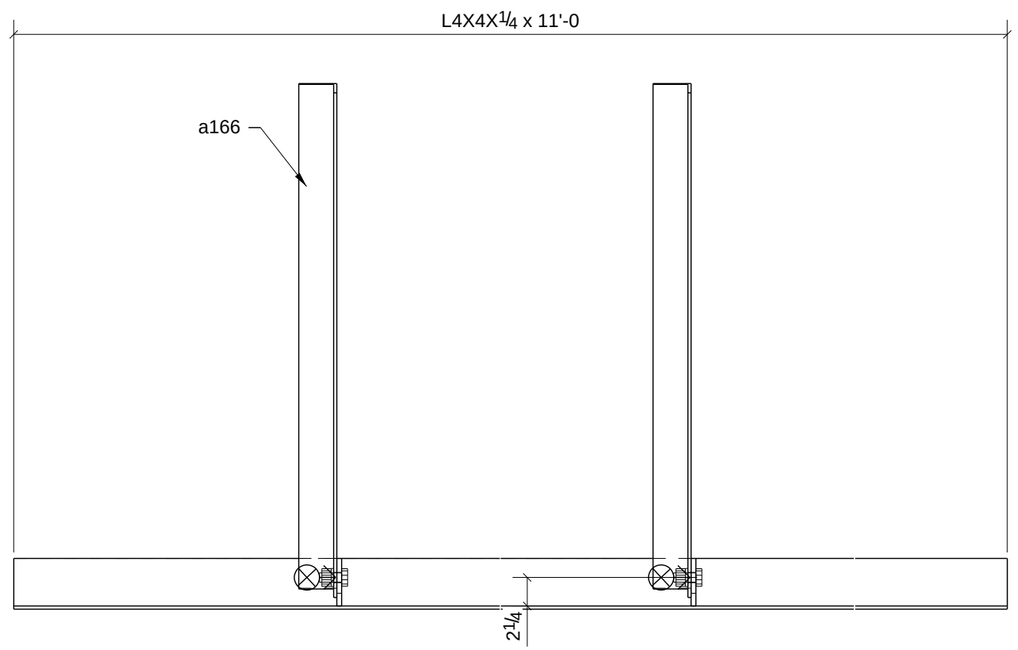

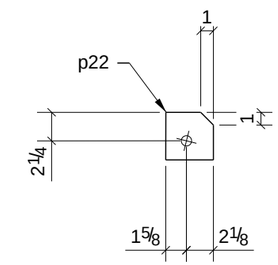

PROCESS CONTROL
PROCESS BY
FAB: _____
FIT AND WELD: _____
INSPECTION: _____
OTHER (IF NEEDED) _____
_____ : _____
_____ : _____
_____ : _____
_____ : _____
REFERENCE LATEST ERECTION DRAWINGS FOR MATERIAL & FABRICATION INFORMATION

ONE - ANGLE - A54

BILL OF MATERIAL

Qty Ea.	Qty Tot	Piece Mark	Description	Length	Weight Total	Remarks	Adv Mill #	Steel Grade
	1	A54	ANGLE					
	1		L4X4X1/4	11'-0"	73	SQ-2		A36
	2	a166	L3X3X1/4	3'-5"	33			A36
	2	p22	BAR3/8"X3 3/4"	0'-3 3/4"	3			A36
	2		3/4"Ø A325N BOLT	0'-1 3/4"	1			

STEEL ASTM	A992	UNO
ELECTRODES	E70XX L.H.	UNO
WELDS	1/4" FILLET	UNO
OPEN HOLES	13/16" UNO	FINISH PER SPECS
BOLTS	3/4" A325N	UNO
PAINT	1 S/C STD PRIMER U.N.O.	UNO

PROJECT NAME
OLDE ORCHARD ELEMENTARY SCHOOL
LOCATION
800 McNAUGHTEN RD. COLUMBUS, OHIO 43213
CONTRACTOR
THOMAS AND MARKER CONSTRUCTION
ARCHITECT
BRAUN & STEIDL

DATE	NO.	DESCRIPTION	BY
5/28/11	B	For Checking	TMc
5/16/11	A	For Approval	TMc

North Central Fabrication, Ltd.
NORTH CENTRAL FABRICATION
Mansfield, OH 44906
419-529-2744 FAX 419-529-5387 http://www.northcentralfab
AISC CERTIFIED FABRICATOR

DESCRIPTION	DATE	DATE	JOB No.
ANGLE BRACE	05/18/2011		70234
	DRAWN BY TMc	CHECKED BY TAN	DRG No. A54

PHASE				
1	2	3	4	5
1	0	0	0	0

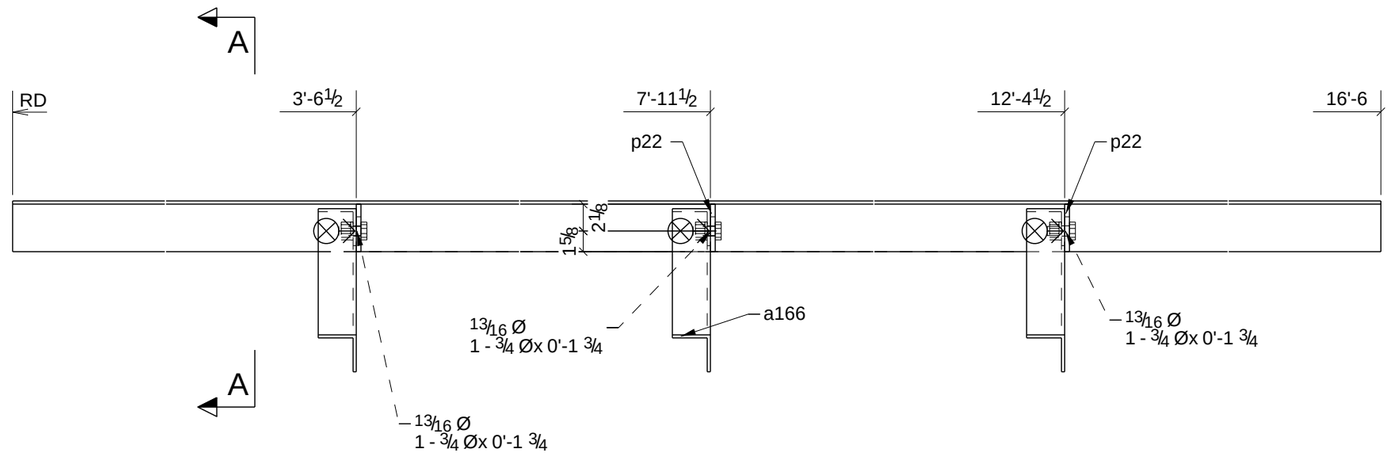

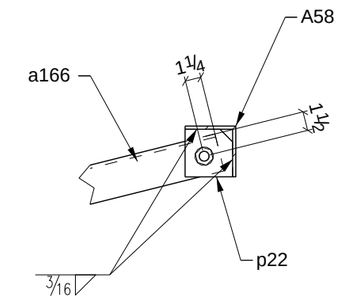

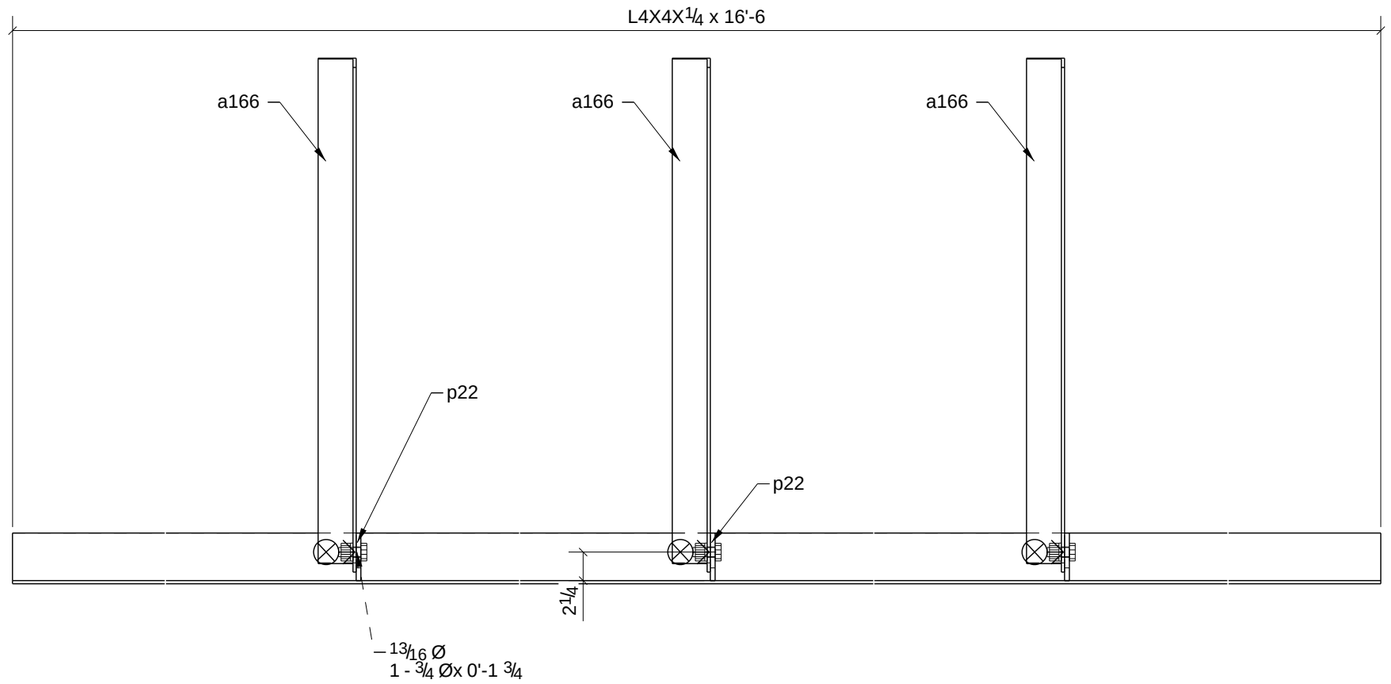

A - A

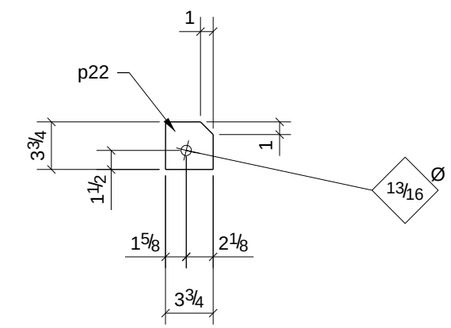

PROCESS CONTROL
PROCESS BY
FAB: _____
FIT AND WELD: _____
INSPECTION: _____
OTHER (IF NEEDED) _____
_____ : _____
_____ : _____
_____ : _____
_____ : _____
REFERENCE LATEST ERECTION DRAWINGS FOR MATERIAL & FABRICATION INFORMATION

ONE - ANGLE - A58

BILL OF MATERIAL

Qty Ea.	Qty Tot	Piece Mark	Description	Length	Weight Total	Remarks	Adv Mill #	Steel Grade
	1	A58	ANGLE					
	1		L4X4X1/4	16'-6"	109	SQ-2		A36
	3	a166	L3X3X1/4	3'-5"	50			A36
	3	p22	BAR3/8"X3 3/4"	0'-3 3/4"	4			A36
	3		3/4"Ø A325N BOLT	0'-1 3/4"	2			

STEEL ASTM	A992	UNO
ELECTRODES	E70XX L.H.	UNO
WELDS	1/4" FILLET	UNO
OPEN HOLES	13/16" UNO	FINISH PER SPECS
BOLTS	3/4" A325N	UNO
PAINT	1 S/C STD PRIMER U.N.O.	UNO

PROJECT NAME
OLDE ORCHARD ELEMENTARY SCHOOL
LOCATION
800 McNAUGHTEN RD. COLUMBUS, OHIO 43213
CONTRACTOR
THOMAS AND MARKER CONSTRUCTION
ARCHITECT
BRAUN & STEIDL

DATE	NO.	DESCRIPTION	BY
5/28/11	B	For Checking	TMc
5/16/11	A	For Approval	TMc

North Central Fabrication, Ltd.

NORTH CENTRAL FABRICATION
Mansfield, OH 44906
419-529-2744 FAX 419-529-5387 http://www.northcentralfab

AISC CERTIFIED FABRICATOR

DESCRIPTION	DATE	DATE	JOB No.
ANGLE BRACE	05/18/2011		70234
	DRAWN BY TMc	CHECKED BY TAN	DRG No. A58

PHASE				
1	2	3	4	5
1	0	0	0	0

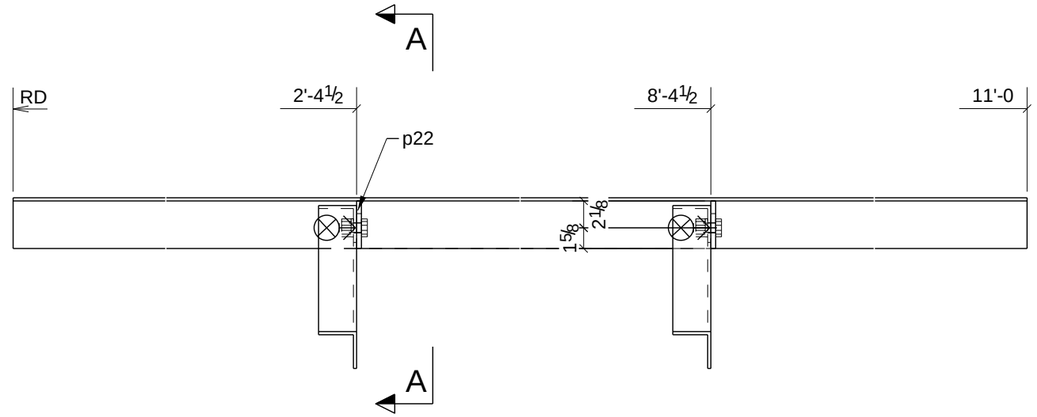

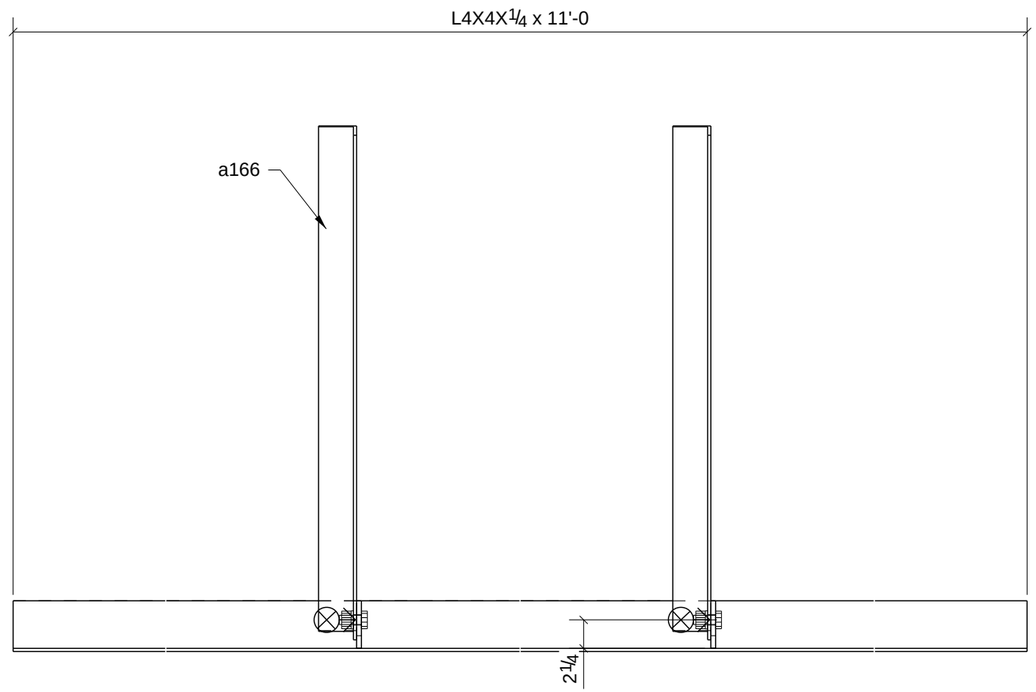

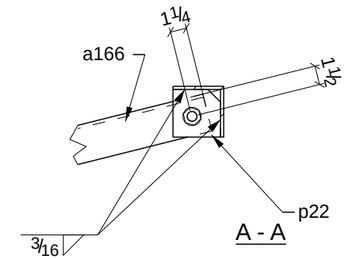

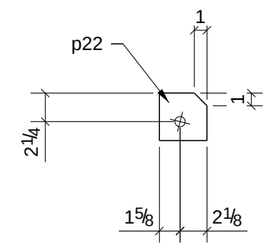

PROCESS CONTROL
PROCESS BY
FAB: _____
FIT AND WELD: _____
INSPECTION: _____
OTHER (IF NEEDED)
_____ : _____
_____ : _____
_____ : _____
_____ : _____
_____ : _____
REFERENCE LATEST ERECTION DRAWINGS FOR MATERIAL & FABRICATION INFORMATION

ONE - ANGLE - A72

BILL OF MATERIAL

Qty Ea.	Qty Tot	Piece Mark	Description	Length	Weight Total	Remarks	Adv Mill #	Steel Grade
	1	A72	ANGLE					
	1		L4X4X1/4	11'-0"	73	SQ-2		A36
	2	a166	L3X3X1/4	3'-5"	33			A36
	2	p22	BAR3/8"X3 3/4"	0'-3 3/4"	3			A36
	2		3/4"Ø A325N BOLT	0'-1 3/4"	1			

STEEL ASTM	A992	UNO
ELECTRODES	E70XX L.H.	UNO
WELDS	1/4" FILLET	UNO
OPEN HOLES	13/16" UNO	FINISH PER SPECS
BOLTS	3/4" A325N	UNO
PAINT	1 S/C STD PRIMER U.N.O.	UNO

PROJECT NAME
OLDE ORCHARD ELEMENTARY SCHOOL
LOCATION
800 McNAUGHTEN RD. COLUMBUS, OHIO 43213
CONTRACTOR
THOMAS AND MARKER CONSTRUCTION
ARCHITECT
BRAUN & STEIDL

DATE	NO.	DESCRIPTION	BY
5/28/11	B	For Checking	TMc
5/16/11	A	For Approval	TMc

North Central Fabrication, Ltd.

NORTH CENTRAL FABRICATION
Mansfield, OH 44906
419-529-2744 FAX 419-529-5387 http://www.northcentralfab

AISC CERTIFIED FABRICATOR

DESCRIPTION	DATE	DATE	JOB No.
ANGLE BRACE	05/18/2011		70234
	DRAWN BY TMc	CHECKED BY TAN	DRG No. A72

PHASE				
1	2	3	4	5
1	0	0	0	0

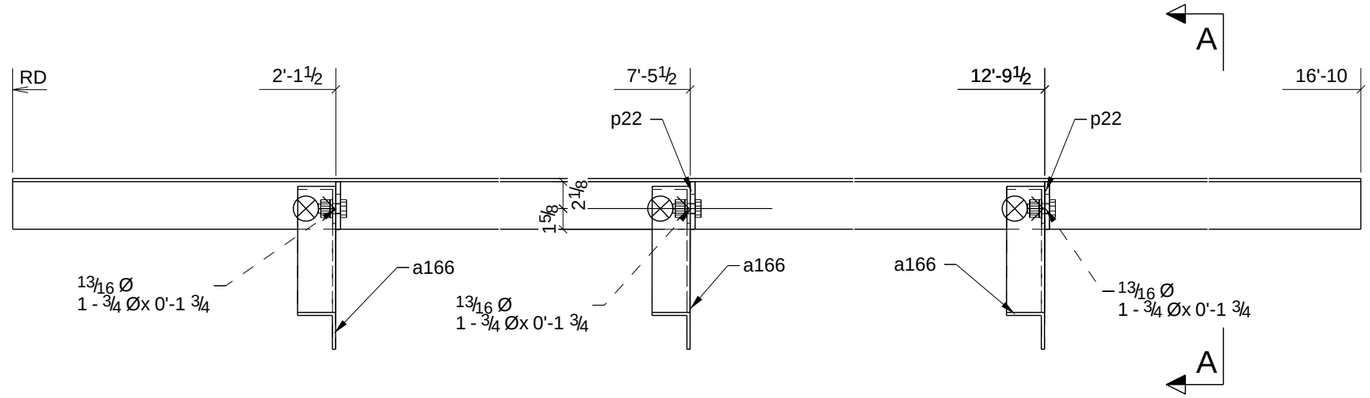

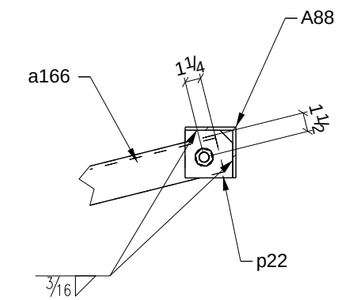

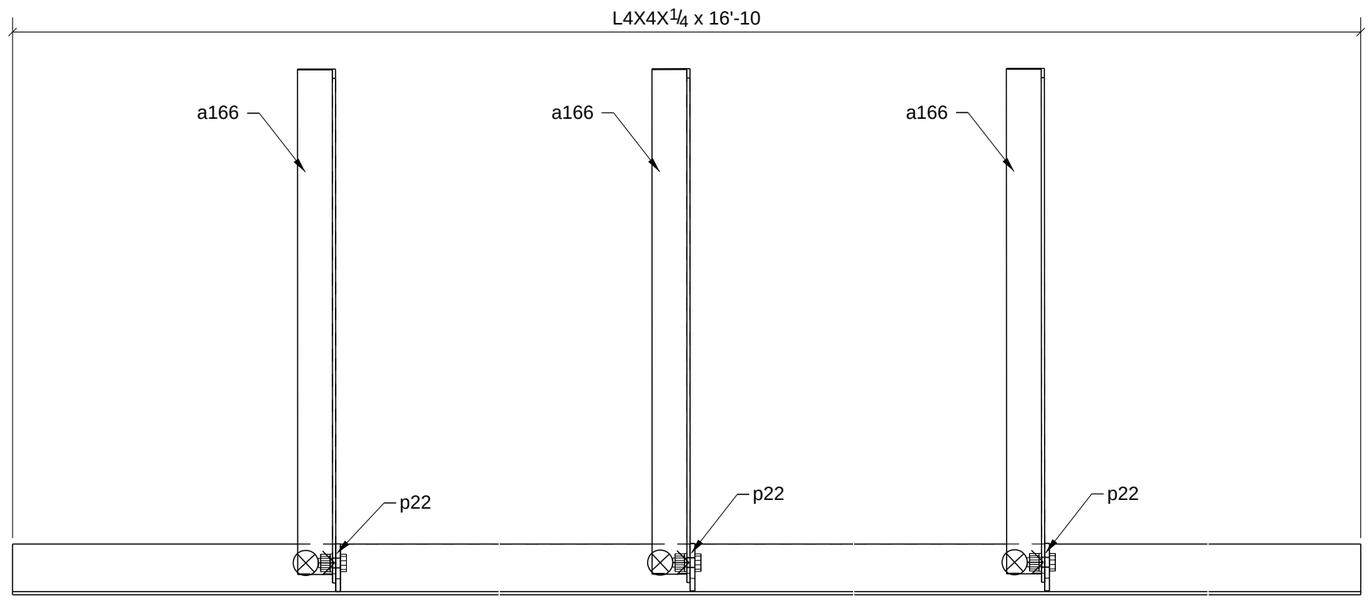

A - A

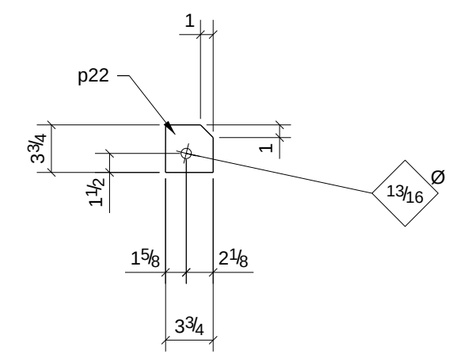

PROCESS CONTROL
PROCESS BY
FAB: _____
FIT AND WELD: _____
INSPECTION: _____
OTHER (IF NEEDED) _____
_____ : _____
_____ : _____
_____ : _____
_____ : _____
REFERENCE LATEST ERECTION DRAWINGS FOR MATERIAL & FABRICATION INFORMATION

ONE - ANGLE - A88

BILL OF MATERIAL

Qty Ea.	Qty Tot	Piece Mark	Description	Length	Weight Total	Remarks	Adv Mill #	Steel Grade
	1	A88	ANGLE					
	1		L4X4X1/4	16'-10"	111	SQ-2		A36
	3	a166	L3X3X1/4	3'-5"	50			A36
	3	p22	BAR3/8"X3 3/4"	0'-3 3/4"	4			A36
	3		3/4"Ø A325N BOLT	0'-1 3/4"	2			

STEEL ASTM	A992	UNO
ELECTRODES	E70XX L.H.	UNO
WELDS	1/4" FILLET	UNO
OPEN HOLES	13/16" UNO	FINISH PER SPECS
BOLTS	3/4" A325N	UNO
PAINT	1 S/C STD PRIMER U.N.O.	UNO

PROJECT NAME
OLDE ORCHARD ELEMENTARY SCHOOL

LOCATION
800 McNAUGHTEN RD. COLUMBUS, OHIO 43213

CONTRACTOR
THOMAS AND MARKER CONSTRUCTION

ARCHITECT
BRAUN & STEIDL

DATE	NO.	DESCRIPTION	BY
5/28/11	B	For Checking	TMc
5/28/11	A	For Checking	TMc

North Central Fabrication, Ltd.
NORTH CENTRAL FABRICATION
Mansfield, OH 44906
419-529-2744 FAX 419-529-5387 http://www.northcentralfab
AISC CERTIFIED FABRICATOR

DESCRIPTION	DATE	DATE	JOB No.
ANGLE BRACE	05/28/2011		70234
	DRAWN BY	CHECKED BY	DRG No. A88

PHASE				
1	2	3	4	5
1	0	0	0	0

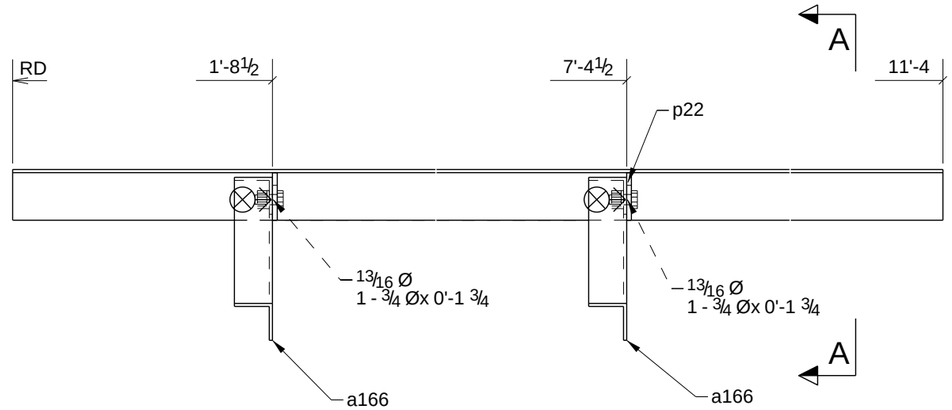

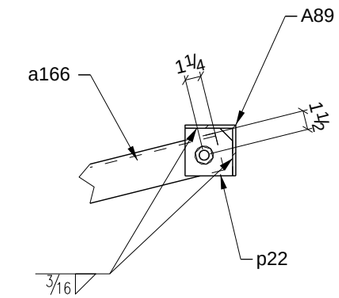

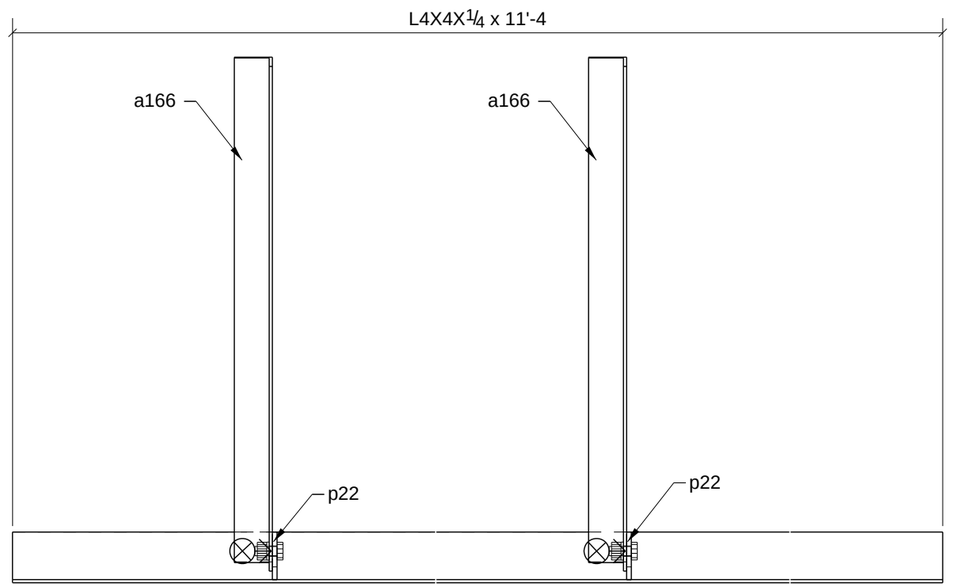

A - A

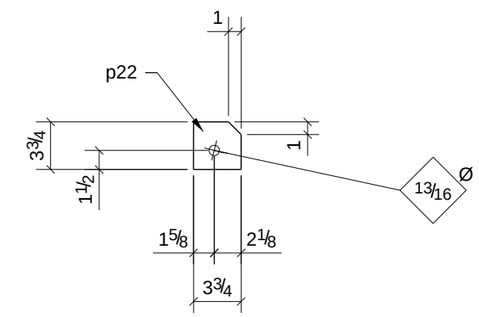

PROCESS CONTROL
PROCESS BY
FAB: _____
FIT AND WELD: _____
INSPECTION: _____
OTHER (IF NEEDED) _____
_____ : _____
_____ : _____
_____ : _____
_____ : _____
REFERENCE LATEST ERECTION DRAWINGS FOR MATERIAL & FABRICATION INFORMATION

ONE - ANGLE - A89

BILL OF MATERIAL

Qty Ea.	Qty Tot	Piece Mark	Description	Length	Weight Total	Remarks	Adv Mill #	Steel Grade
	1	A89	ANGLE					
	1		L4X4X1/4	11'-4"	75	SQ-2		A36
	2	a166	L3X3X1/4	3'-5"	33			A36
	2	p22	BAR3/8"X3 3/4"	0'-3 3/4"	3			A36
	2		3/4"Ø A325N BOLT	0'-1 3/4"	1			

STEEL ASTM	A992	UNO
ELECTRODES	E70XX L.H.	UNO
WELDS	1/4" FILLET	UNO
OPEN HOLES	13/16" UNO	FINISH PER SPECS
BOLTS	3/4" A325N	UNO
PAINT	1 S/C STD PRIMER U.N.O.	UNO

PROJECT NAME
OLDE ORCHARD ELEMENTARY SCHOOL
LOCATION
800 McNAUGHTEN RD. COLUMBUS, OHIO 43213
CONTRACTOR
THOMAS AND MARKER CONSTRUCTION
ARCHITECT
BRAUN & STEIDL

DATE	NO.	DESCRIPTION	BY
5/28/11	B	For Checking	TMc
5/28/11	A	For Checking	TMc

North Central Fabrication, Ltd.
NORTH CENTRAL FABRICATION
Mansfield, OH 44906
419-529-2744 FAX 419-529-5387 http://www.northcentralfab
AISC CERTIFIED FABRICATOR

DESCRIPTION	DATE	DATE	JOB No.
ANGLE BRACE	05/28/2011		70234
	DRAWN BY	CHECKED BY	DRG No. A89

PHASE				
1	2	3	4	5
2	0	0	0	0

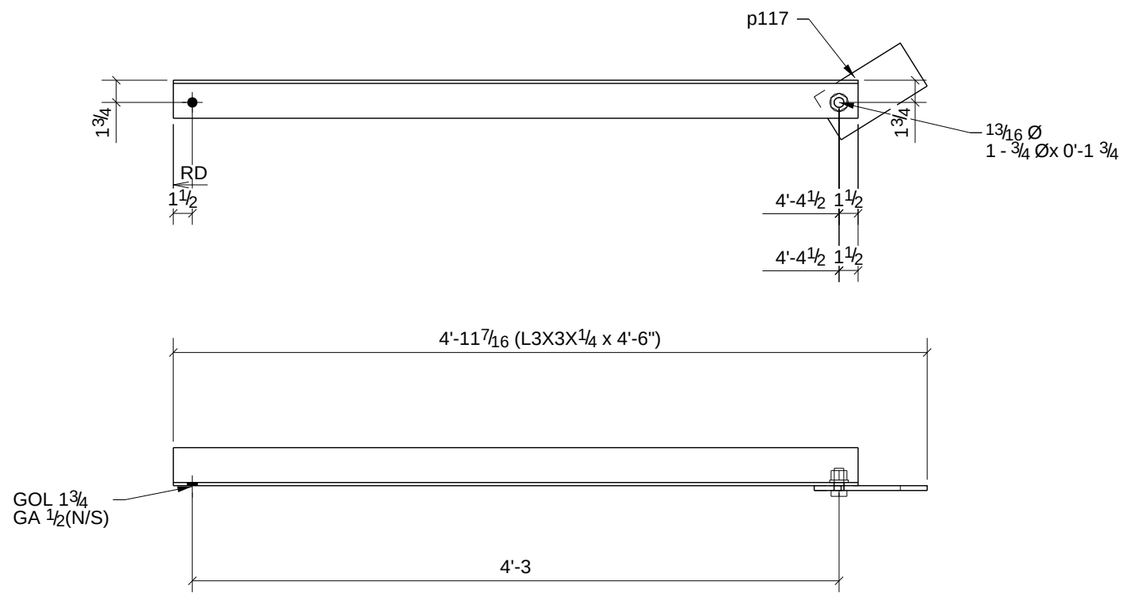

2 - DIAGONALS - D10

PROCESS CONTROL
PROCESS BY
FAB: _____
FIT AND WELD: _____
INSPECTION: _____
OTHER (IF NEEDED)
_____ : _____
_____ : _____
_____ : _____
_____ : _____
_____ : _____
REFERENCE LATEST ERECTION DRAWINGS FOR MATERIAL & FABRICATION INFORMATION

BILL OF MATERIAL

Qty Ea.	Qty Tot	Piece Mark	Description	Length	Weight Total	Remarks	Adv Mill #	Steel Grade
	2	D10	DIAGONALS					
	2		L3X3X1/4	4'-6"	44	SQ-2		A36
	2	p117	BAR3/8"X4"	0'-8"	7			A36
	2		3/4"Ø A325N BOLT	0'-1 3/4"	1			

STEEL ASTM	A992	UNO
ELECTRODES	E70XX L.H.	UNO
WELDS	1/4" FILLET	UNO
OPEN HOLES	13/16" UNO	FINISH PER SPECS
BOLTS	3/4" A325N	UNO
PAINT	1 S/C STD PRIMER U.N.O.	UNO

PROJECT NAME
OLDE ORCHARD ELEMENTARY SCHOOL
LOCATION
800 McNAUGHTEN RD. COLUMBUS, OHIO 43213
CONTRACTOR
THOMAS AND MARKER CONSTRUCTION
ARCHITECT
BRAUN & STEIDL

DATE	NO.	DESCRIPTION	BY
5/28/11	B	For Checking	TMc
5/16/11	A	For Approval	TMc

North Central Fabrication, Ltd.

NORTH CENTRAL FABRICATION
Mansfield, OH 44906
419-529-2744 FAX 419-529-5387 http://www.northcentralfab

AISC CERTIFIED FABRICATOR

DESCRIPTION	DATE	DATE	JOB No.
ANGLE BRACE	05/17/2011		70234
	DRAWN BY TMc	CHECKED BY TAN	DRG No. D10

PHASE				
1	2	3	4	5
7	0	0	0	0

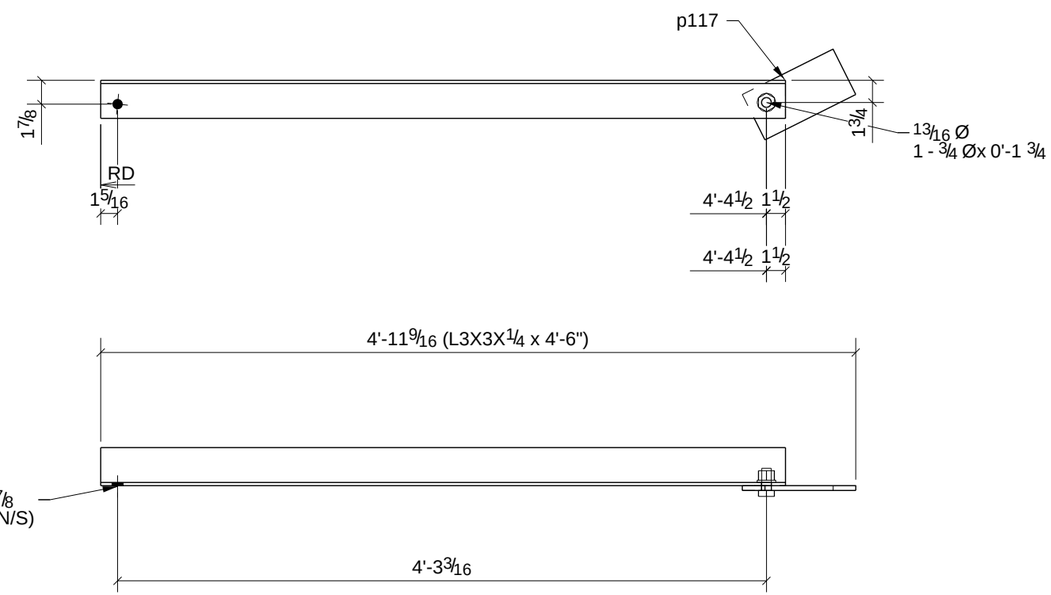

PROCESS CONTROL
PROCESS BY
FAB: _____
FIT AND WELD: _____
INSPECTION: _____
OTHER (IF NEEDED) _____
_____ : _____
_____ : _____
_____ : _____
_____ : _____
REFERENCE LATEST ERECTION DRAWINGS FOR MATERIAL & FABRICATION INFORMATION

7 - DIAGONALS - D11

BILL OF MATERIAL

Qty Ea.	Qty Tot	Piece Mark	Description	Length	Weight Total	Remarks	Adv Mill #	Steel Grade
	7	D11	DIAGONALS					
	7		L3X3X1/4	4'-6"	154	SQ-2		A36
	7	p117	BAR3/8"X4"	0'-8"	24			A36
	7		3/4"Ø A325N BOLT	0'-1 3/4"	4			

STEEL ASTM	A992	UNO
ELECTRODES	E70XX L.H.	UNO
WELDS	1/4" FILLET	UNO
OPEN HOLES	13/16" UNO	FINISH PER SPECS
BOLTS	3/4" A325N	UNO
PAINT	1 S/C STD PRIMER U.N.O.	UNO

PROJECT NAME
OLDE ORCHARD ELEMENTARY SCHOOL

LOCATION
800 McNAUGHTEN RD. COLUMBUS, OHIO 43213

CONTRACTOR
THOMAS AND MARKER CONSTRUCTION

ARCHITECT
BRAUN & STEIDL

DATE	NO.	DESCRIPTION	BY
5/28/11	B	For Checking	TMc
5/16/11	A	For Approval	TMc

North Central Fabrication, Ltd.

NORTH CENTRAL FABRICATION
Mansfield, OH 44906
419-529-2744 FAX 419-529-5387 http://www.northcentralfab

AISC CERTIFIED FABRICATOR

DESCRIPTION	DATE	DATE	JOB No.
ANGLE BRACE	05/18/2011		70234
	DRAWN BY TMc	CHECKED BY TAN	DRG No. D11

PHASE				
1	2	3	4	5
1	0	0	0	0

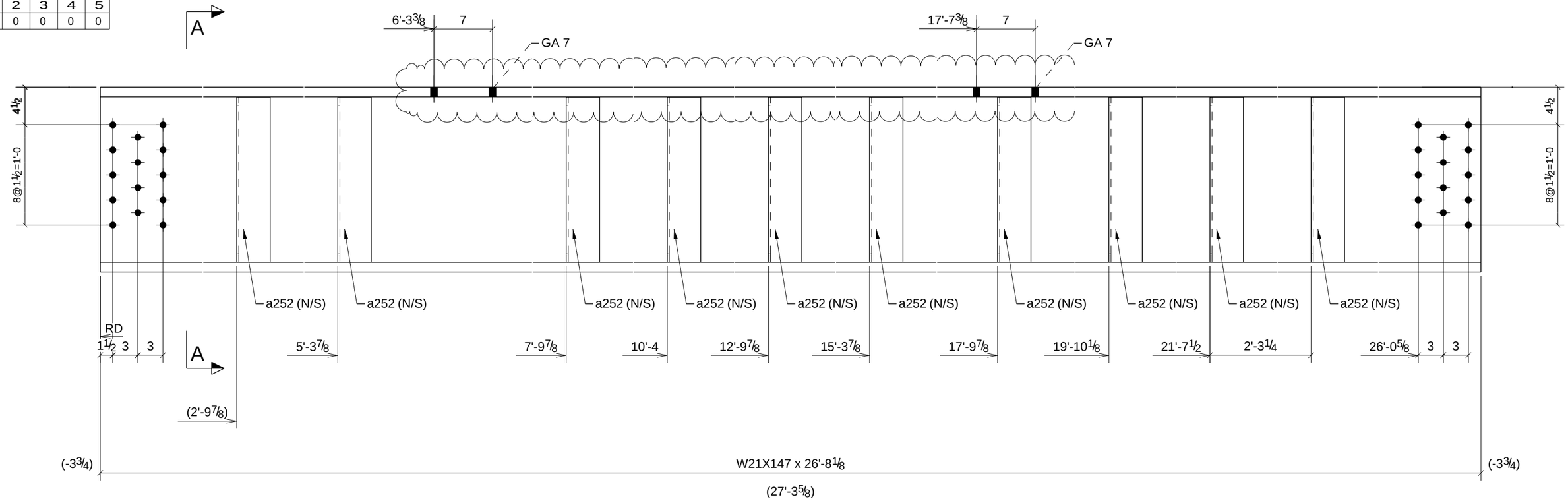

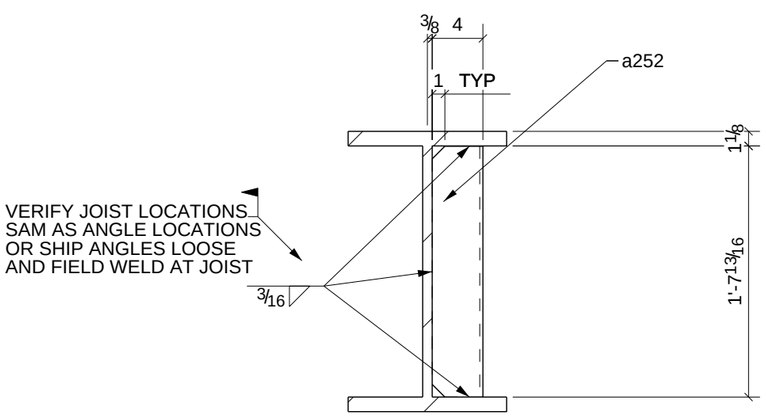

A - A

ONE - BEAM - B1

W	22 1/8" x 3/4"
F	12 1/2" x 1 1/8"

PROCESS CONTROL
PROCESS BY
FAB: _____
FIT AND WELD: _____
INSPECTION: _____
OTHER (IF NEEDED)
_____ : _____
_____ : _____
_____ : _____
_____ : _____
REFERENCE LATEST ERECTION DRAWINGS FOR MATERIAL & FABRICATION INFORMATION

DATE	NO.	DESCRIPTION	BY
5/28/11	B	For Checking	TMc
5/16/11	A	For Approval	TMc

BILL OF MATERIAL

Qty Ea.	Qty Tot	Piece Mark	Description	Length	Weight Total	Remarks	Adv Mill #	Steel Grade
	1	B1	BEAM					
	1		W21X147	26'-8 1/8"	3922	SQ-2		A992
	10	a252	L4X4X1/4	1'-7 13/16"	109			A36

STEEL ASTM	A992	UNO
ELECTRODES	E70XX L.H.	UNO
WELDS	1/4" FILLET	UNO
OPEN HOLES	13/16" UNO	FINISH PER SPECS
BOLTS	3/4" A325N	UNO
PAINT	1 S/C STD PRIMER U.N.O.	UNO

PROJECT NAME
OLDE ORCHARD ELEMENTARY SCHOOL

LOCATION
800 McNAUGHTEN RD. COLUMBUS, OHIO 43213

CONTRACTOR
THOMAS AND MARKER CONSTRUCTION

ARCHITECT
BRAUN & STEIDL

North Central Fabrication, Ltd.
NORTH CENTRAL FABRICATION
Mansfield, OH 44906
419-529-2744 FAX 419-529-5387 http://www.northcentralfab

AISC CERTIFIED FABRICATOR

DESCRIPTION	DATE	DATE	JOB No.
BEAM	05/18/2011		70234
	DRAWN BY TMc	CHECKED BY TAN	DRG No. B1

PHASE				
1	2	3	4	5
1	0	0	0	0

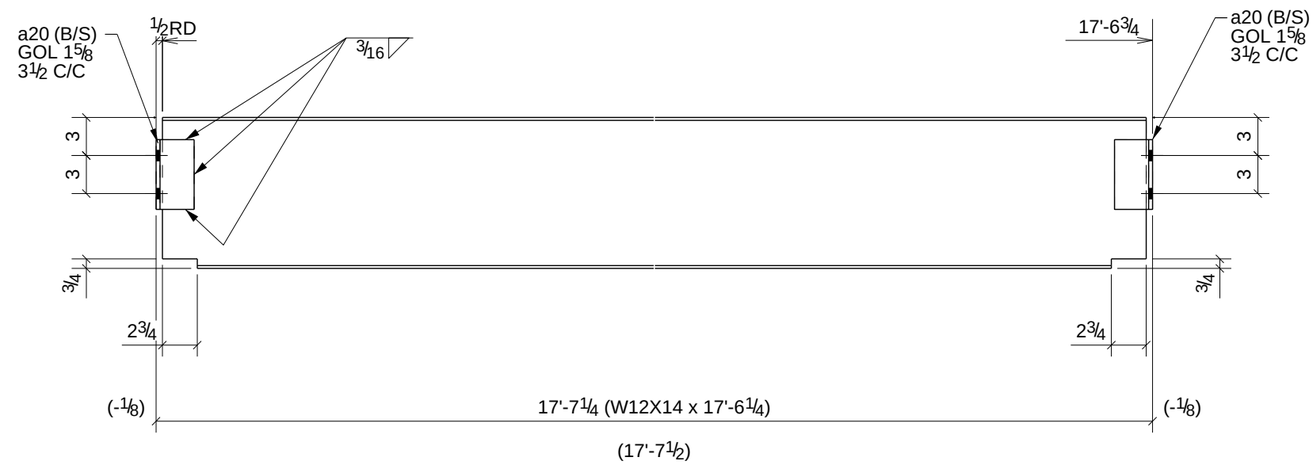

PROCESS CONTROL
PROCESS BY
FAB: _____
FIT AND WELD: _____
INSPECTION: _____
OTHER (IF NEEDED) _____
_____ : _____
_____ : _____
_____ : _____
_____ : _____
_____ : _____
REFERENCE LATEST ERECTION DRAWINGS FOR MATERIAL & FABRICATION INFORMATION

ONE - BEAM - B2

W	11 7/8" x 3/16"
F	4" x 1/4"

DATE	NO.	DESCRIPTION	BY
5/28/11	B	For Checking	TMc
5/16/11	A	For Approval	TMc

BILL OF MATERIAL

Qty Ea.	Qty Tot	Piece Mark	Description	Length	Weight Total	Remarks	Adv Mill #	Steel Grade
	1	B2	BEAM					
	1		W12X14	17'-6 1/4"	248	SQ-2		A992
	4	a20	L3X3X5/16	0'-5 1/2"	11			A36

STEEL ASTM	A992	UNO
ELECTRODES	E70XX L.H.	UNO
WELDS	1/4" FILLET	UNO
OPEN HOLES	13/16" UNO	FINISH PER SPECS
BOLTS	3/4" A325N	UNO
PAINT	1 S/C STD PRIMER U.N.O.	UNO

PROJECT NAME
OLDE ORCHARD ELEMENTARY SCHOOL

LOCATION
800 McNAUGHTEN RD. COLUMBUS, OHIO 43213

CONTRACTOR
THOMAS AND MARKER CONSTRUCTION

ARCHITECT
BRAUN & STEIDL

North Central Fabrication, Ltd.
NORTH CENTRAL FABRICATION
Mansfield, OH 44906
419-529-2744 FAX 419-529-5387 http://www.northcentralfab
AISC CERTIFIED FABRICATOR

DESCRIPTION	DATE	DATE	JOB No.
BEAM	05/18/2011		70234
	DRAWN BY TMc	CHECKED BY TAN	DRG No. B2

PHASE				
1	2	3	4	5
4	0	0	0	0

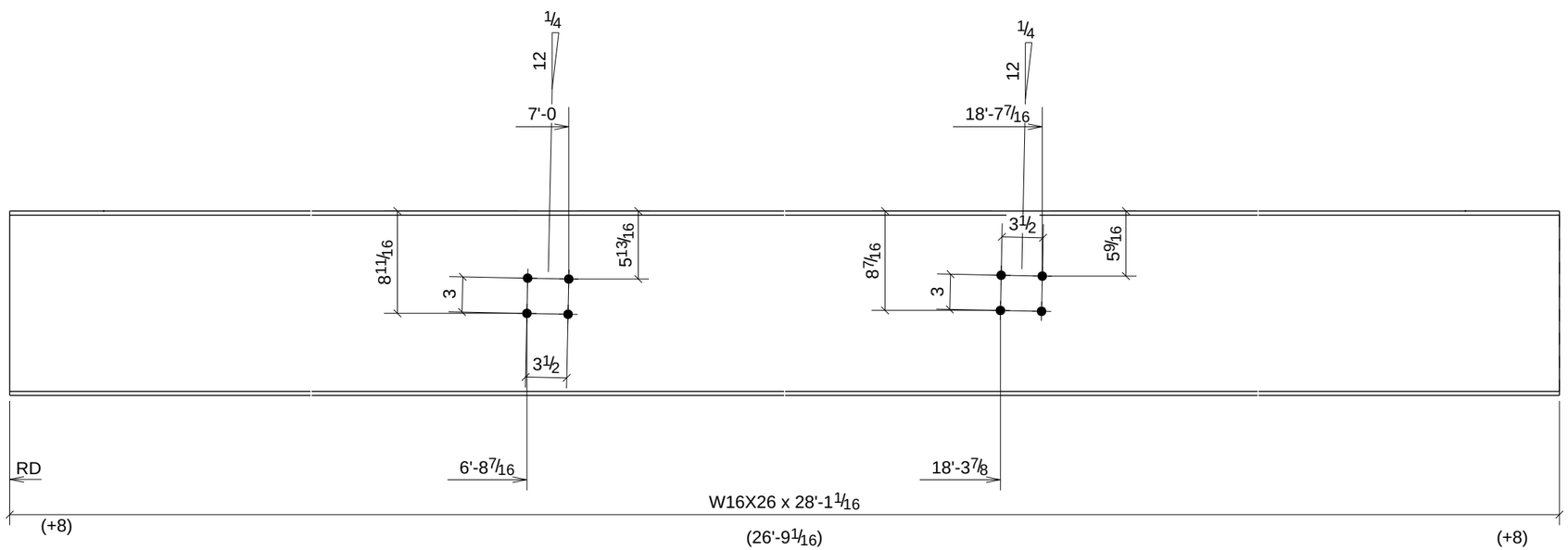

4 - BEAMS - B3

W	15 11/16" x 1/4"
F	5 1/2" x 3/8"

PROCESS CONTROL
PROCESS BY
FAB: _____
FIT AND WELD: _____
INSPECTION: _____
OTHER (IF NEEDED) _____
_____ : _____
_____ : _____
_____ : _____
_____ : _____
_____ : _____
REFERENCE LATEST ERECTION DRAWINGS FOR MATERIAL & FABRICATION INFORMATION

DATE	NO.	DESCRIPTION	BY
5/28/11	B	For Checking	TMc
5/16/11	A	For Approval	TMc

BILL OF MATERIAL

Qty Ea.	Qty Tot	Piece Mark	Description	Length	Weight Total	Remarks	Adv Mill #	Steel Grade
	4	B3	BEAMS					
	4		W16X26	28'-1 1/16"	2937	SQ-2		A992

STEEL ASTM	A992	UNO
ELECTRODES	E70XX L.H.	UNO
WELDS	1/4" FILLET	UNO
OPEN HOLES	13/16" UNO	FINISH PER SPECS
BOLTS	3/4" A325N	UNO
PAINT	1 S/C STD PRIMER U.N.O.	UNO

PROJECT NAME
OLDE ORCHARD ELEMENTARY SCHOOL

LOCATION
800 McNAUGHTEN RD. COLUMBUS, OHIO 43213

CONTRACTOR
THOMAS AND MARKER CONSTRUCTION

ARCHITECT
BRAUN & STEIDL

North Central Fabrication, Ltd.
NORTH CENTRAL FABRICATION
Mansfield, OH 44906
419-529-2744 FAX 419-529-5387 http://www.northcentralfab
AISC CERTIFIED FABRICATOR

DESCRIPTION	DATE	DATE	JOB No.
BEAM	05/14/2011		70234
	DRAWN BY TMc	CHECKED BY TAN	DRG No. B3

PHASE				
1	2	3	4	5
1	0	0	0	0

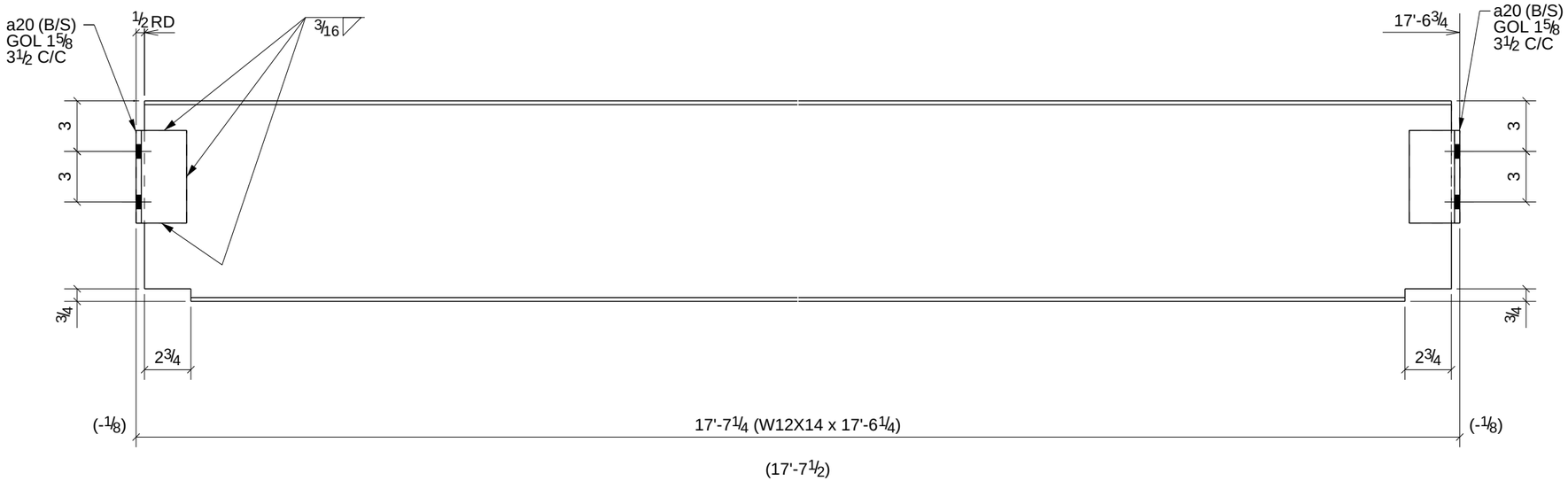

PROCESS CONTROL
PROCESS BY
FAB:
FIT AND WELD:
INSPECTION:
OTHER (IF NEEDED)
:
:
:
:
REFERENCE LATEST ERECTION DRAWINGS FOR MATERIAL & FABRICATION INFORMATION

ONE - BEAM - B4

W	11 7/8" x 3/16"
F	4" x 1/4"

DATE	NO.	DESCRIPTION	BY
5/28/11	B	For Checking	TMc
5/16/11	A	For Approval	TMc

BILL OF MATERIAL

Qty Ea.	Qty Tot	Piece Mark	Description	Length	Weight Total	Remarks	Adv Mill #	Steel Grade
	1	B4	BEAM					
	1		W12X14	17'-6 1/4"	248	SQ-2		A992
	4	a20	L3X3X5/16	0'-5 1/2"	11			A36

STEEL ASTM	A992	UNO
ELECTRODES	E70XX L.H.	UNO
WELDS	1/4" FILLET	UNO
OPEN HOLES	13/16" UNO	FINISH PER SPECS
BOLTS	3/4" A325N	UNO
PAINT	1 S/C STD PRIMER U.N.O.	UNO

PROJECT NAME
OLDE ORCHARD ELEMENTARY SCHOOL

LOCATION
800 McNAUGHTEN RD. COLUMBUS, OHIO 43213

CONTRACTOR
THOMAS AND MARKER CONSTRUCTION

ARCHITECT
BRAUN & STEIDL

North Central Fabrication, Ltd.

NORTH CENTRAL FABRICATION

Mansfield, OH 44906

419-529-2744 FAX 419-529-5387 http://www.northcentralfab

AISC CERTIFIED FABRICATOR

DESCRIPTION	DATE	DATE	JOB No.
BEAM	05/18/2011		70234
	DRAWN BY TMc	CHECKED BY TAN	DRG No. B4

PHASE				
1	2	3	4	5
1	0	0	0	0

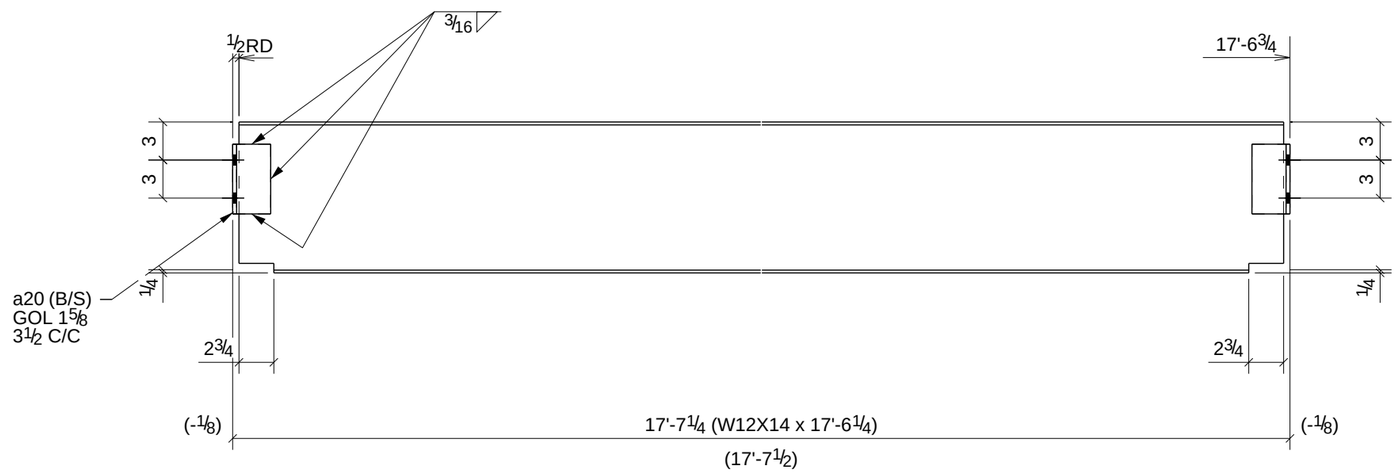

PROCESS CONTROL
PROCESS BY
FAB: _____
FIT AND WELD: _____
INSPECTION: _____
OTHER (IF NEEDED) _____
_____ : _____
_____ : _____
_____ : _____
_____ : _____
REFERENCE LATEST ERECTION DRAWINGS FOR MATERIAL & FABRICATION INFORMATION

ONE - BEAM - B7

W	11 7/8" x 3/16"
F	4" x 1/4"

DATE	NO.	DESCRIPTION	BY
5/28/11	B	For Checking	TMc
5/16/11	A	For Approval	TMc

BILL OF MATERIAL

Qty Ea.	Qty Tot	Piece Mark	Description	Length	Weight Total	Remarks	Adv Mill #	Steel Grade
	1	B7	BEAM					
	1		W12X14	17'-6 1/4"	248	SQ-2		A992
	4	a20	L3X3X5/16	0'-5 1/2"	11			A36

STEEL ASTM	A992	UNO
ELECTRODES	E70XX L.H.	UNO
WELDS	1/4" FILLET	UNO
OPEN HOLES	13/16" UNO	FINISH PER SPECS
BOLTS	3/4" A325N	UNO
PAINT	1 S/C STD PRIMER U.N.O.	UNO

PROJECT NAME
OLDE ORCHARD ELEMENTARY SCHOOL

LOCATION
800 McNAUGHTEN RD. COLUMBUS, OHIO 43213

CONTRACTOR
THOMAS AND MARKER CONSTRUCTION

ARCHITECT
BRAUN & STEIDL

North Central Fabrication, Ltd.
NORTH CENTRAL FABRICATION
Mansfield, OH 44906
419-529-2744 FAX 419-529-5387 http://www.northcentralfab
AISC CERTIFIED FABRICATOR

DESCRIPTION	DATE	DATE	JOB No.
BEAM	05/18/2011		70234
	DRAWN BY TMc	CHECKED BY TAN	DRG No. B7

PHASE				
1	2	3	4	5
1	0	0	0	0

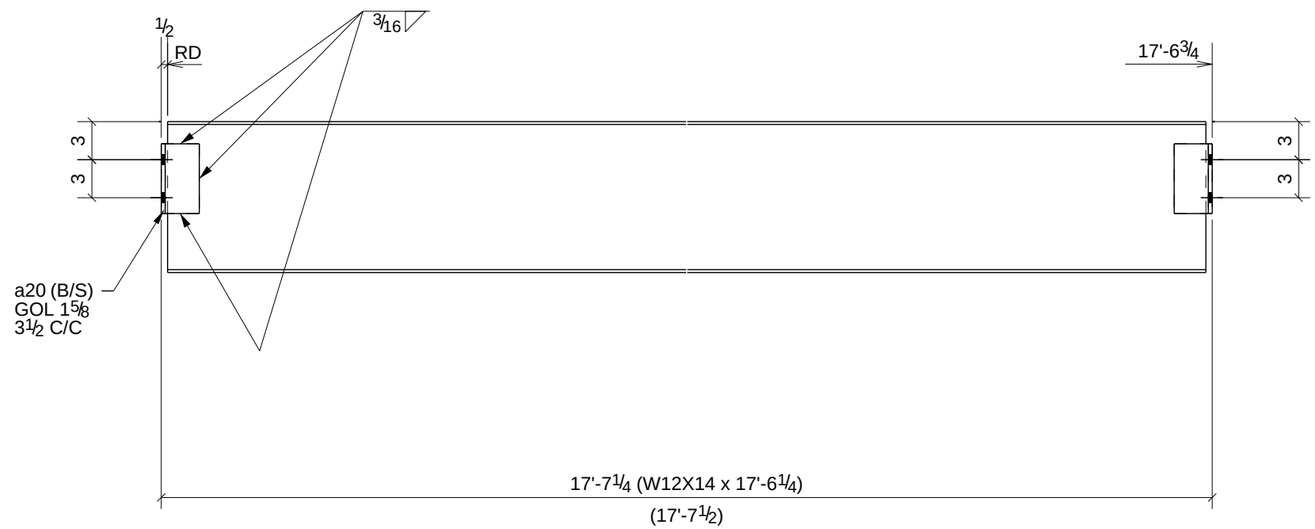

PROCESS CONTROL
PROCESS BY
FAB: _____
FIT AND WELD: _____
INSPECTION: _____
OTHER (IF NEEDED)
_____ : _____
_____ : _____
_____ : _____
_____ : _____
_____ : _____
REFERENCE LATEST ERECTION DRAWINGS FOR MATERIAL & FABRICATION INFORMATION

ONE - BEAM - B8

W	11 7/8" x 3/16"
F	4" x 1/4"

DATE	NO.	DESCRIPTION	BY
5/28/11	B	For Checking	TMc
5/16/11	A	For Approval	TMc

BILL OF MATERIAL

Qty Ea.	Qty Tot	Piece Mark	Description	Length	Weight Total	Remarks	Adv Mill #	Steel Grade
	1	B8	BEAM					
	1		W12X14	17'-6 1/4"	248	SQ-2		A992
	4	a20	L3X3X5/16	0'-5 1/2"	11			A36

STEEL ASTM	A992	UNO
ELECTRODES	E70XX L.H.	UNO
WELDS	1/4" FILLET	UNO
OPEN HOLES	13/16" UNO	FINISH PER SPECS
BOLTS	3/4" A325N	UNO
PAINT	1 S/C STD PRIMER U.N.O.	UNO

PROJECT NAME
OLDE ORCHARD ELEMENTARY SCHOOL

LOCATION
800 McNAUGHTEN RD. COLUMBUS, OHIO 43213

CONTRACTOR
THOMAS AND MARKER CONSTRUCTION

ARCHITECT
BRAUN & STEIDL

North Central Fabrication, Ltd.
NORTH CENTRAL FABRICATION
Mansfield, OH 44906
419-529-2744 FAX 419-529-5387 http://www.northcentralfab
AISC CERTIFIED FABRICATOR

DESCRIPTION: BEAM	DATE: 05/18/2011	DATE	JOB No. 70234
	DRAWN BY: TMc	CHECKED BY: TAN	DRG No. B8

PHASE				
1	2	3	4	5
1	0	0	0	0

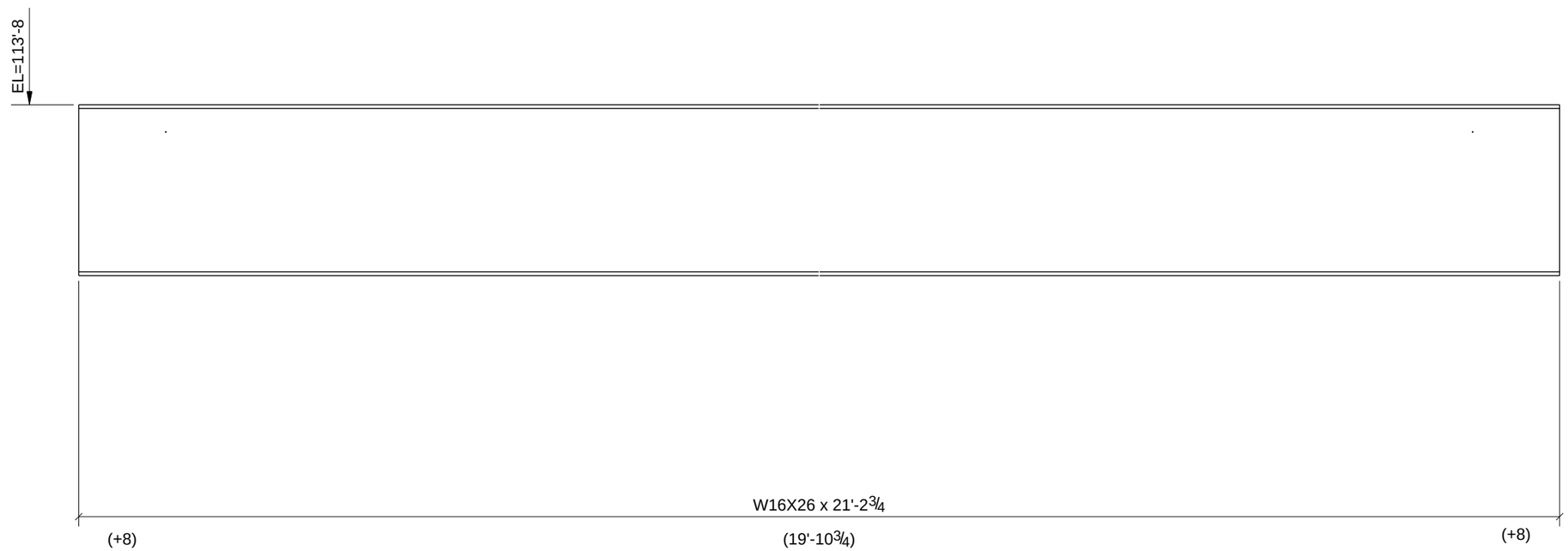

ONE - BEAM - B9

W	15 11/16" x 1/4"
F	5 1/2" x 3/8"

PROCESS CONTROL
PROCESS BY
FAB: _____
FIT AND WELD: _____
INSPECTION: _____
OTHER (IF NEEDED)
_____ : _____
_____ : _____
_____ : _____
_____ : _____
_____ : _____
REFERENCE LATEST ERECTION DRAWINGS FOR MATERIAL & FABRICATION INFORMATION

DATE	NO.	DESCRIPTION	BY
5/28/11	B	For Checking	TMc
5/16/11	A	For Approval	TMc

BILL OF MATERIAL

Qty Ea.	Qty Tot	Piece Mark	Description	Length	Weight Total	Remarks	Adv Mill #	Steel Grade
	1	B9	BEAM					
	1		W16X26	21'-2 3/4"	555	SQ-2		A992

STEEL ASTM	A992		UNO
ELECTRODES	E70XX L.H.		UNO
WELDS	1/4" FILLET		UNO
OPEN HOLES	13/16"	UNO	FINISH PER SPECS
BOLTS	3/4" A325N		UNO
PAINT	1 S/C STD PRIMER U.N.O.		UNO

PROJECT NAME
OLDE ORCHARD ELEMENTARY SCHOOL
LOCATION
800 McNAUGHTEN RD. COLUMBUS, OHIO 43213
CONTRACTOR
THOMAS AND MARKER CONSTRUCTION
ARCHITECT
BRAUN & STEIDL

North Central Fabrication, Ltd.
NORTH CENTRAL FABRICATION
Mansfield, OH 44906
419-529-2744 FAX 419-529-5387 http://www.northcentralfab
AISC CERTIFIED FABRICATOR

DESCRIPTION	DATE		JOB No.
BEAM	05/14/2011	DATE	70234
	DRAWN BY TMc	CHECKED BY TAN	DRG No. B9

PHASE				
1	2	3	4	5
2	0	0	0	0

2 - BEAMS - B13

W	23 5/8" x 3/8"
F	7" x 1/2"

PROCESS CONTROL
PROCESS BY
FAB: _____
FIT AND WELD: _____
INSPECTION: _____
OTHER (IF NEEDED) _____
_____ : _____
_____ : _____
_____ : _____
_____ : _____
REFERENCE LATEST ERECTION DRAWINGS FOR MATERIAL & FABRICATION INFORMATION

DATE	NO.	DESCRIPTION	BY
5/28/11	B	For Checking	TMc
5/16/11	A	For Approval	TMc

BILL OF MATERIAL

Qty Ea.	Qty Tot	Piece Mark	Description	Length	Weight Total	Remarks	Adv Mill #	Steel Grade
	2	B13	BEAMS					
	2		W24X55	27'-8 1/8"	3052	SQ-2		A992
	4	a11	L3X3X5/16	1'-2 1/2"	29			A36

STEEL ASTM	A992	UNO
ELECTRODES	E70XX L.H.	UNO
WELDS	1/4" FILLET	UNO
OPEN HOLES	13/16" UNO	FINISH PER SPECS
BOLTS	3/4" A325N	UNO
PAINT	1 S/C STD PRIMER U.N.O.	UNO

PROJECT NAME
OLDE ORCHARD ELEMENTARY SCHOOL

LOCATION
800 McNAUGHTEN RD. COLUMBUS, OHIO 43213

CONTRACTOR
THOMAS AND MARKER CONSTRUCTION

ARCHITECT
BRAUN & STEIDL

North Central Fabrication, Ltd.
NORTH CENTRAL FABRICATION
Mansfield, OH 44906
419-529-2744 FAX 419-529-5387 http://www.northcentralfab
AISC CERTIFIED FABRICATOR

DESCRIPTION	DATE	DATE	JOB No.
BEAM	05/14/2011		70234
	DRAWN BY TMc	CHECKED BY TAN	DRG No. B13

PHASE				
1	2	3	4	5
1	0	0	0	0

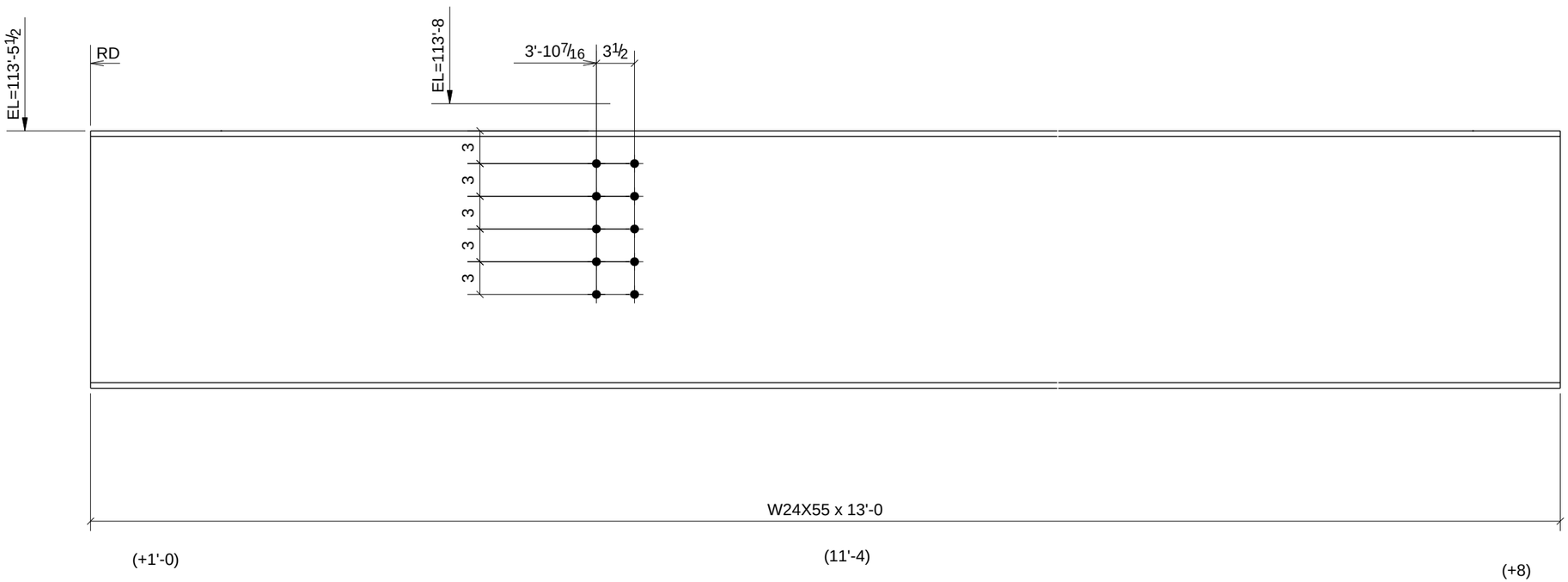

ONE - BEAM - B15

W	23 5/8" x 3/8"
F	7" x 1/2"

PROCESS CONTROL
PROCESS BY
FAB: _____
FIT AND WELD: _____
INSPECTION: _____
OTHER (IF NEEDED)
_____ : _____
_____ : _____
_____ : _____
_____ : _____
REFERENCE LATEST ERECTION DRAWINGS FOR MATERIAL & FABRICATION INFORMATION

DATE	NO.	DESCRIPTION	BY
5/28/11	B	For Checking	TMc
5/16/11	A	For Approval	TMc

BILL OF MATERIAL

Qty Ea.	Qty Tot	Piece Mark	Description	Length	Weight Total	Remarks	Adv Mill #	Steel Grade
	1	B15	BEAM					
	1		W24X55	13'-0"	717	SQ-2		A992

STEEL ASTM	A992	UNO
ELECTRODES	E70XX L.H.	UNO
WELDS	1/4" FILLET	UNO
OPEN HOLES	13/16" UNO	FINISH PER SPECS
BOLTS	3/4" A325N	UNO
PAINT	1 S/C STD PRIMER U.N.O.	UNO

PROJECT NAME
OLDE ORCHARD ELEMENTARY SCHOOL
LOCATION
800 McNAUGHTEN RD. COLUMBUS, OHIO 43213
CONTRACTOR
THOMAS AND MARKER CONSTRUCTION
ARCHITECT
BRAUN & STEIDL

North Central Fabrication, Ltd.
NORTH CENTRAL FABRICATION
Mansfield, OH 44906
419-529-2744 FAX 419-529-5387 http://www.northcentralfab
AISC CERTIFIED FABRICATOR

DESCRIPTION	DATE	DATE	JOB No.
BEAM	05/14/2011		70234
	DRAWN BY TMc	CHECKED BY TAN	DRG No. B15

PHASE				
1	2	3	4	5
1	0	0	0	0

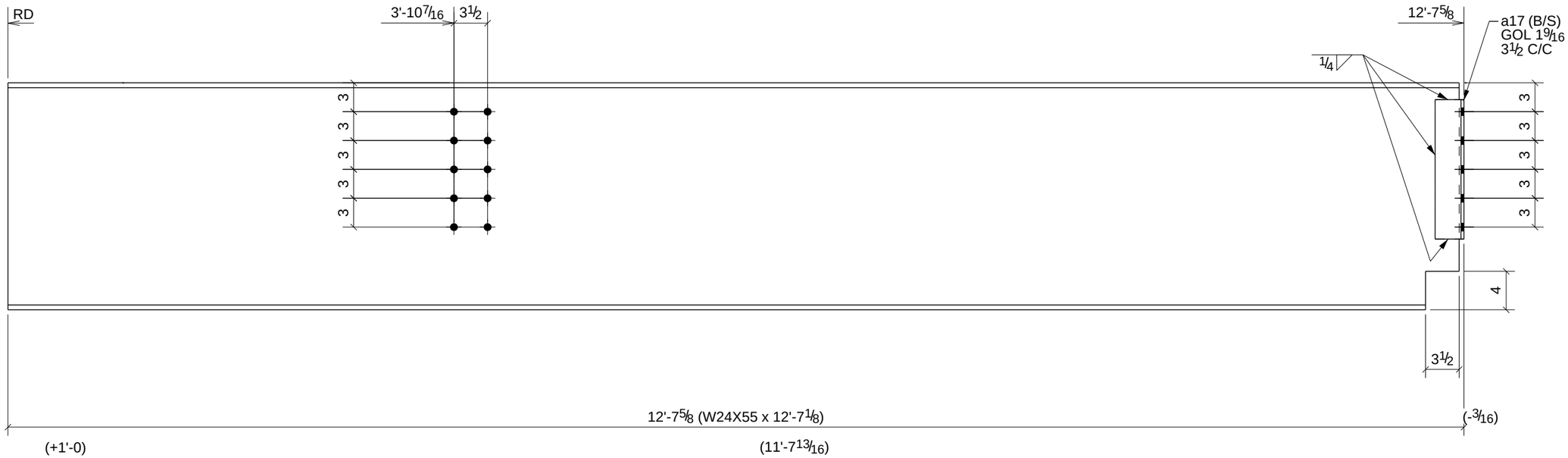

ONE - BEAM - B16

W	23 5/8" x 3/8"
F	7" x 1/2"

PROCESS CONTROL
PROCESS BY
FAB: _____
FIT AND WELD: _____
INSPECTION: _____
OTHER (IF NEEDED) _____
_____ : _____
_____ : _____
_____ : _____
_____ : _____
REFERENCE LATEST ERECTION DRAWINGS FOR MATERIAL & FABRICATION INFORMATION

DATE	NO.	DESCRIPTION	BY
5/28/11	B	For Checking	TMc
5/16/11	A	For Approval	TMc

BILL OF MATERIAL

Qty Ea.	Qty Tot	Piece Mark	Description	Length	Weight Total	Remarks	Adv Mill #	Steel Grade
	1	B16	BEAM					
	1		W24X55	12'-7 1/8"	694	SQ-2		A992
	2	a17	L3X3X5/16	1'-2 1/2"	15			A36

STEEL ASTM	A992	UNO
ELECTRODES	E70XX L.H.	UNO
WELDS	1/4" FILLET	UNO
OPEN HOLES	13/16" UNO	FINISH PER SPECS
BOLTS	3/4" A325N	UNO
PAINT	1 S/C STD PRIMER U.N.O.	UNO

PROJECT NAME
OLDE ORCHARD ELEMENTARY SCHOOL

LOCATION
800 McNAUGHTEN RD. COLUMBUS, OHIO 43213

CONTRACTOR
THOMAS AND MARKER CONSTRUCTION

ARCHITECT
BRAUN & STEIDL

North Central Fabrication, Ltd.
NORTH CENTRAL FABRICATION
Mansfield, OH 44906
419-529-2744 FAX 419-529-5387 http://www.northcentralfab

AISC CERTIFIED FABRICATOR

DESCRIPTION	DATE	DATE	JOB No.
BEAM	05/14/2011		70234
	DRAWN BY TMc	CHECKED BY TAN	DRG No. B16

PHASE				
1	2	3	4	5
1	0	0	0	0

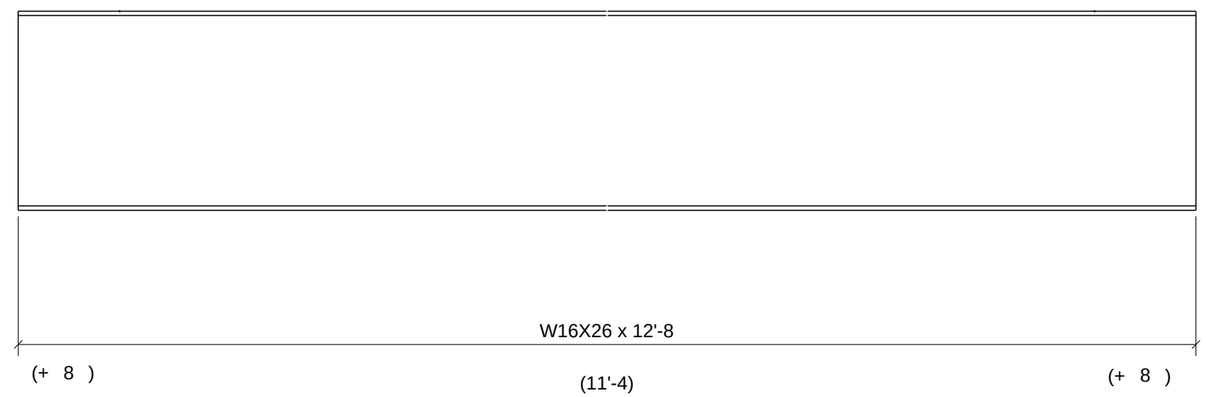

PROCESS CONTROL
PROCESS BY
FAB: _____
FIT AND WELD: _____
INSPECTION: _____
OTHER (IF NEEDED) _____
_____ : _____
_____ : _____
_____ : _____
_____ : _____
REFERENCE LATEST ERECTION DRAWINGS FOR MATERIAL & FABRICATION INFORMATION

ONE - BEAM - B17

W	15 11/16" x 1/4"
F	5 1/2" x 3/8"

DATE	NO.	DESCRIPTION	BY
5/28/11	B	For Checking	TMc
5/16/11	A	For Approval	TMc

BILL OF MATERIAL

Qty Ea.	Qty Tot	Piece Mark	Description	Length	Weight Total	Remarks	Adv Mill #	Steel Grade
	1	B17	BEAM					
	1		W16X26	12'-8"	331	SQ-2		A992

STEEL ASTM	A992		UNO
ELECTRODES	E70XX L.H.		UNO
WELDS	1/4" FILLET		UNO
OPEN HOLES	13/16"	UNO	FINISH PER SPECS
BOLTS	3/4" A325N		UNO
PAINT	1 S/C STD PRIMER U.N.O.		UNO

PROJECT NAME
OLDE ORCHARD ELEMENTARY SCHOOL

LOCATION
800 McNAUGHTEN RD. COLUMBUS, OHIO 43213

CONTRACTOR
THOMAS AND MARKER CONSTRUCTION

ARCHITECT
BRAUN & STEIDL

North Central Fabrication, Ltd.
NORTH CENTRAL FABRICATION
Mansfield, OH 44906
419-529-2744 FAX 419-529-5387 http://www.northcentralfab
AISC CERTIFIED FABRICATOR

DESCRIPTION	DATE	DATE	JOB No.
BEAM	05/18/2011		70234
	DRAWN BY TMc	CHECKED BY TAN	DRG No. B17

PHASE				
1	2	3	4	5
1	0	0	0	0

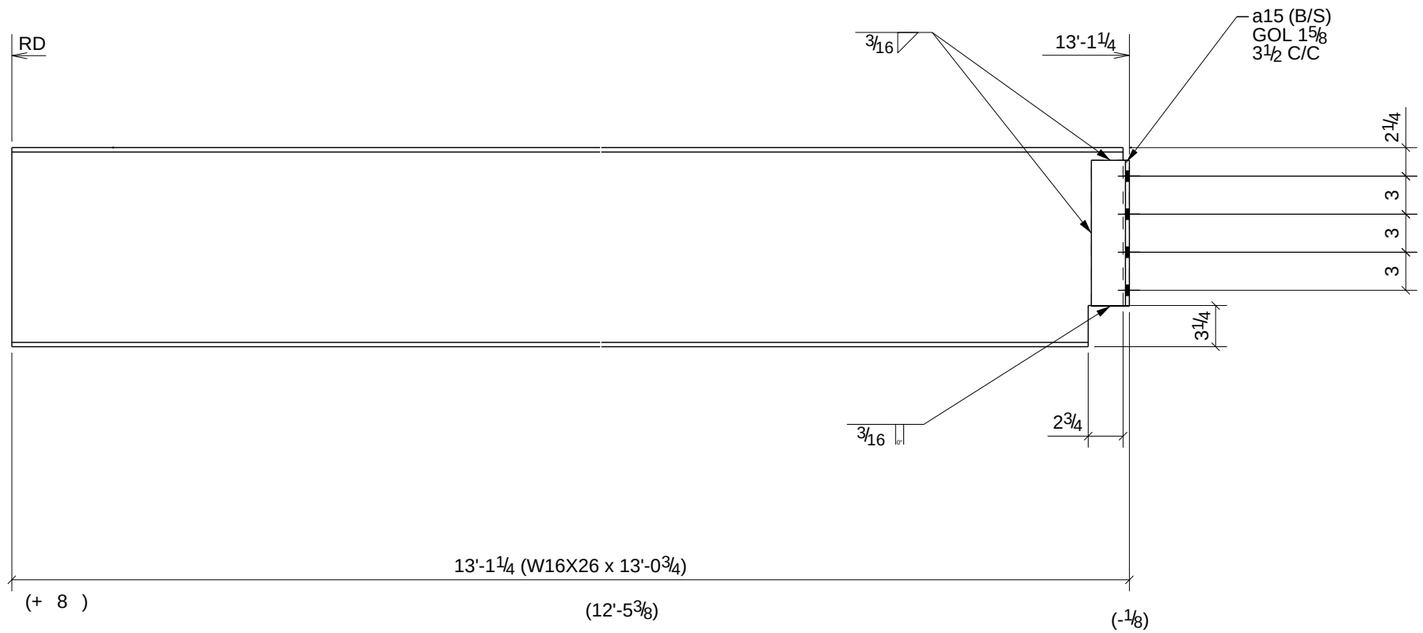

PROCESS CONTROL
PROCESS BY
FAB: _____
FIT AND WELD: _____
INSPECTION: _____
OTHER (IF NEEDED)
_____ : _____
_____ : _____
_____ : _____
_____ : _____
_____ : _____
REFERENCE LATEST ERECTION DRAWINGS FOR MATERIAL & FABRICATION INFORMATION

ONE - BEAM - B18

W	15 11/16" x 1/4"
F	5 1/2" x 3/8"

DATE	NO.	DESCRIPTION	BY
5/28/11	B	For Checking	TMc
5/16/11	A	For Approval	TMc

BILL OF MATERIAL

Qty Ea.	Qty Tot	Piece Mark	Description	Length	Weight Total	Remarks	Adv Mill #	Steel Grade
	1	B18	BEAM					
	1		W16X26	13'-0 3/4"	341	SQ-2		A992
	2	a15	L3X3X5/16	0'-11 1/2"	12			A36

STEEL ASTM	A992	UNO
ELECTRODES	E70XX L.H.	UNO
WELDS	1/4" FILLET	UNO
OPEN HOLES	13/16" UNO	FINISH PER SPECS
BOLTS	3/4" A325N	UNO
PAINT	1 S/C STD PRIMER U.N.O.	UNO

PROJECT NAME
OLDE ORCHARD ELEMENTARY SCHOOL

LOCATION
800 McNAUGHTEN RD. COLUMBUS, OHIO 43213

CONTRACTOR
THOMAS AND MARKER CONSTRUCTION

ARCHITECT
BRAUN & STEIDL

North Central Fabrication, Ltd.
NORTH CENTRAL FABRICATION
Mansfield, OH 44906
419-529-2744 FAX 419-529-5387 http://www.northcentralfab
AISC CERTIFIED FABRICATOR

DESCRIPTION	DATE	DATE	JOB No.
BEAM	05/18/2011		70234
	DRAWN BY TMc	CHECKED BY TAN	DRG No. B18

PHASE				
1	2	3	4	5
1	0	0	0	0

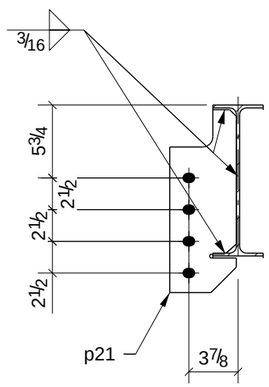

A - A

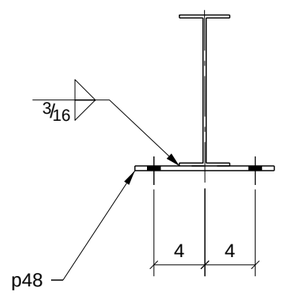

B - B

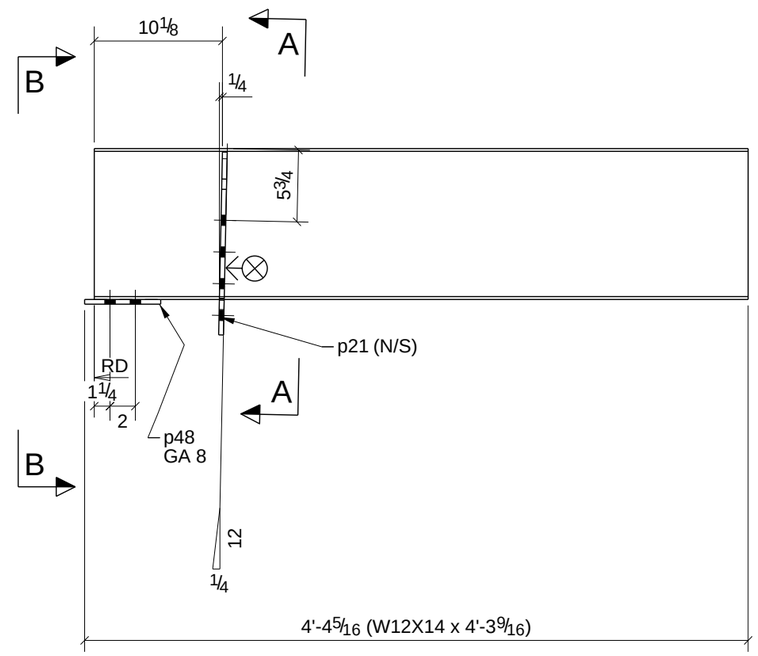

PROCESS CONTROL
PROCESS BY
FAB: _____
FIT AND WELD: _____
INSPECTION: _____
OTHER (IF NEEDED) _____
_____ : _____
_____ : _____
_____ : _____
_____ : _____
REFERENCE LATEST ERECTION DRAWINGS FOR MATERIAL & FABRICATION INFORMATION

ONE - BEAM - B21

W	11 7/8" x 3/16"
F	4" x 1/4"

DATE	NO.	DESCRIPTION	BY
5/28/11	B	For Checking	TMc
5/16/11	A	For Approval	TMc

BILL OF MATERIAL

Qty Ea.	Qty Tot	Piece Mark	Description	Length	Weight Total	Remarks	Adv Mill #	Steel Grade
	1	B21	BEAM					
	1		W12X14	4'-3 9/16"	61	SQ-2		A992
	1	p21	BAR3/8"X5 1/4"	1'-2 7/16"	7			A36
	1	p48	BAR3/8"X6"	0'-11"	7			A992

STEEL ASTM	A992	UNO
ELECTRODES	E70XX L.H.	UNO
WELDS	1/4" FILLET	UNO
OPEN HOLES	13/16" UNO	FINISH PER SPECS
BOLTS	3/4" A325N	UNO
PAINT	1 S/C STD PRIMER U.N.O.	UNO

PROJECT NAME
OLDE ORCHARD ELEMENTARY SCHOOL

LOCATION
800 McNAUGHTEN RD. COLUMBUS, OHIO 43213

CONTRACTOR
THOMAS AND MARKER CONSTRUCTION

ARCHITECT
BRAUN & STEIDL

North Central Fabrication, Ltd.
NORTH CENTRAL FABRICATION
Mansfield, OH 44906
419-529-2744 FAX 419-529-5387 http://www.northcentralfab
AISC CERTIFIED FABRICATOR

DESCRIPTION	DATE	DATE	JOB No.
BEAM	05/14/2011		70234
	DRAWN BY TMc	CHECKED BY TAN	DRG No. B21

PHASE				
1	2	3	4	5
2	0	0	0	0

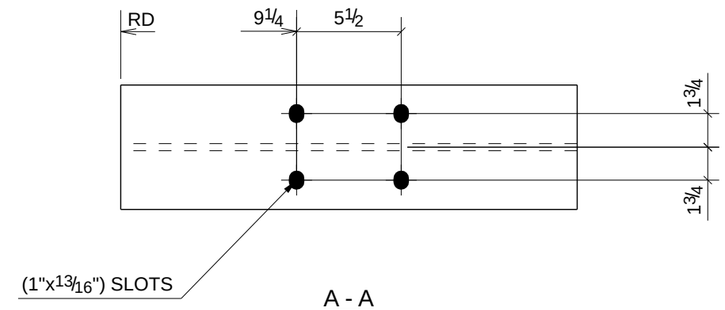

A - A

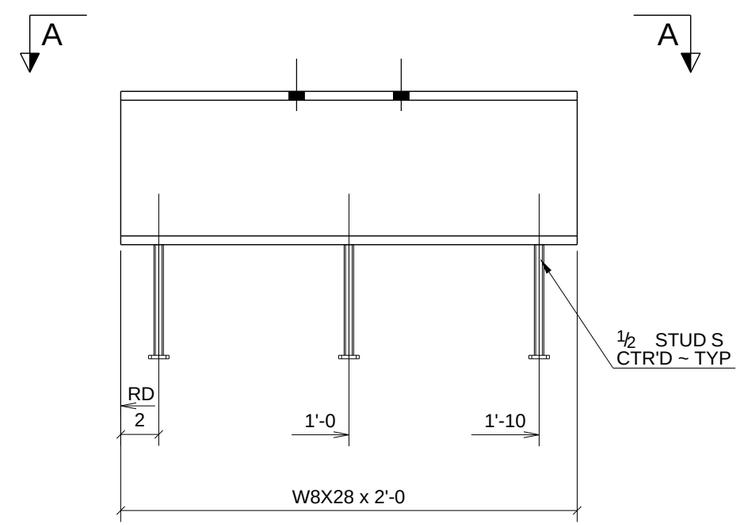

PROCESS CONTROL
PROCESS BY
FAB: _____
FIT AND WELD: _____
INSPECTION: _____
OTHER (IF NEEDED)
_____ : _____
_____ : _____
_____ : _____
_____ : _____
REFERENCE LATEST ERECTION DRAWINGS FOR MATERIAL & FABRICATION INFORMATION

2 - BEAMS - B22

W	8 1/16" x 1/4"
F	6 9/16" x 7/16"

DATE	NO.	DESCRIPTION	BY
5/28/11	B	For Checking	TMc
5/16/11	A	For Approval	TMc

BILL OF MATERIAL

Qty Ea.	Qty Tot	Piece Mark	Description	Length	Weight Total	Remarks	Adv Mill #	Steel Grade
	2	B22	BEAMS					
	2		W8X28	2'-0"	112	SQ-2		A992
	6		STUD 1/2" DIA	0'-6"	2			

STEEL ASTM	A992	UNO
ELECTRODES	E70XX L.H.	UNO
WELDS	1/4" FILLET	UNO
OPEN HOLES	13/16" UNO	FINISH PER SPECS
BOLTS	3/4" A325N	UNO
PAINT	1 S/C STD PRIMER U.N.O.	UNO

PROJECT NAME
OLDE ORCHARD ELEMENTARY SCHOOL
LOCATION
800 McNAUGHTEN RD. COLUMBUS, OHIO 43213
CONTRACTOR
THOMAS AND MARKER CONSTRUCTION
ARCHITECT
BRAUN & STEIDL

North Central Fabrication, Ltd.
NORTH CENTRAL FABRICATION
Mansfield, OH 44906
419-529-2744 FAX 419-529-5387 http://www.northcentralfab
AISC CERTIFIED FABRICATOR

DESCRIPTION	DATE	DATE	JOB No.
BEAM	05/14/2011		70234
	DRAWN BY TMc	CHECKED BY TAN	DRG No. B22

PHASE				
1	2	3	4	5
1	0	0	0	0

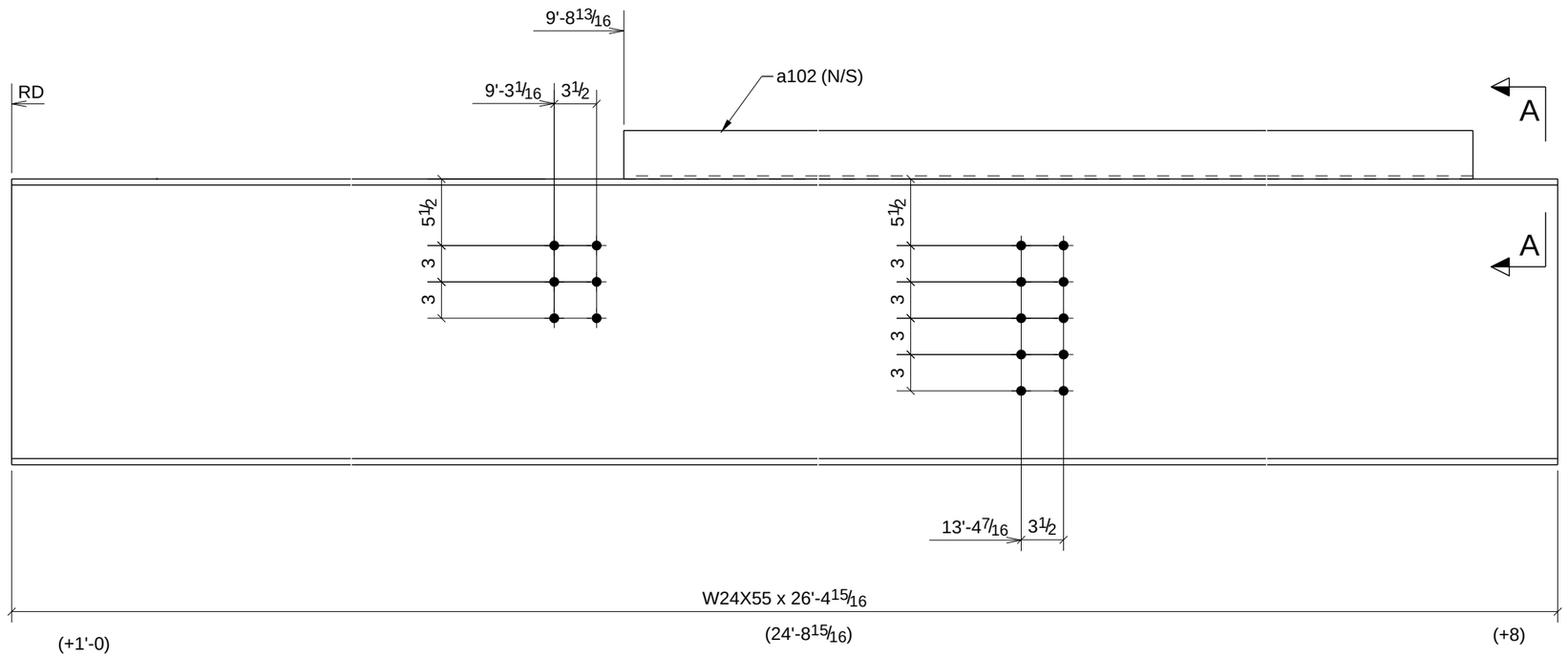

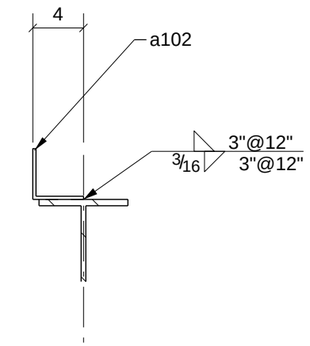

A - A

PROCESS CONTROL
PROCESS BY
FAB: _____
FIT AND WELD: _____
INSPECTION: _____
OTHER (IF NEEDED) _____
_____ : _____
_____ : _____
_____ : _____
_____ : _____
REFERENCE LATEST ERECTION DRAWINGS FOR MATERIAL & FABRICATION INFORMATION

ONE - BEAM - B23

W	23 5/8" x 3/8"
F	7" x 1/2"

DATE	NO.	DESCRIPTION	BY
5/28/11	B	For Checking	TMc
5/16/11	A	For Approval	TMc

BILL OF MATERIAL

Qty Ea.	Qty Tot	Piece Mark	Description	Length	Weight Total	Remarks	Adv Mill #	Steel Grade
	1	B23	BEAM					
	1		W24X55	26'-4 15/16"	1456	SQ-2		A992
	1	a102	L4X4X1/4	16'-1 1/8"	106			A36

STEEL ASTM	A992	UNO
ELECTRODES	E70XX L.H.	UNO
WELDS	1/4" FILLET	UNO
OPEN HOLES	13/16" UNO	FINISH PER SPECS
BOLTS	3/4" A325N	UNO
PAINT	1 S/C STD PRIMER U.N.O.	UNO

PROJECT NAME
OLDE ORCHARD ELEMENTARY SCHOOL

LOCATION
800 McNAUGHTEN RD. COLUMBUS, OHIO 43213

CONTRACTOR
THOMAS AND MARKER CONSTRUCTION

ARCHITECT
BRAUN & STEIDL

North Central Fabrication, Ltd.
NORTH CENTRAL FABRICATION
Mansfield, OH 44906
419-529-2744 FAX 419-529-5387 http://www.northcentralfab
AISC CERTIFIED FABRICATOR

DESCRIPTION	DATE	DATE	JOB No.
BEAM	05/14/2011		70234
	DRAWN BY TMc	CHECKED BY TAN	DRG No. B23

PHASE				
1	2	3	4	5
1	0	0	0	0

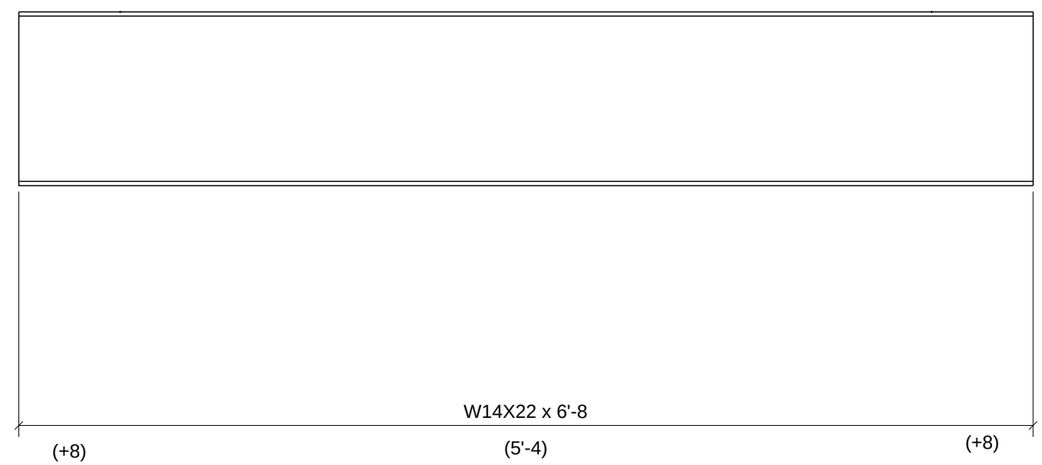

PROCESS CONTROL
PROCESS BY
FAB: _____
FIT AND WELD: _____
INSPECTION: _____
OTHER (IF NEEDED) _____
_____ : _____
_____ : _____
_____ : _____
_____ : _____
REFERENCE LATEST ERECTION DRAWINGS FOR MATERIAL & FABRICATION INFORMATION

ONE - BEAM - B24

W	13 11/16" x 1/4"
F	5" x 5/16"

DATE	NO.	DESCRIPTION	BY
5/28/11	B	For Checking	TMc
5/16/11	A	For Approval	TMc

BILL OF MATERIAL

Qty Ea.	Qty Tot	Piece Mark	Description	Length	Weight Total	Remarks	Adv Mill #	Steel Grade
	1	B24	BEAM					
	1		W14X22	6'-8"	147	SQ-2		A992

STEEL ASTM	A992	UNO
ELECTRODES	E70XX L.H.	UNO
WELDS	1/4" FILLET	UNO
OPEN HOLES	13/16" UNO	FINISH PER SPECS
BOLTS	3/4" A325N	UNO
PAINT	1 S/C STD PRIMER U.N.O.	UNO

PROJECT NAME
OLDE ORCHARD ELEMENTARY SCHOOL

LOCATION
800 McNAUGHTEN RD. COLUMBUS, OHIO 43213

CONTRACTOR
THOMAS AND MARKER CONSTRUCTION

ARCHITECT
BRAUN & STEIDL

North Central Fabrication, Ltd.
NORTH CENTRAL FABRICATION
Mansfield, OH 44906
419-529-2744 FAX 419-529-5387 http://www.northcentralfab
AISC CERTIFIED FABRICATOR

DESCRIPTION	DATE	DATE	JOB No.
BEAM	05/18/2011		70234
	DRAWN BY TMc	CHECKED BY TAN	DRG No. B24

PHASE				
1	2	3	4	5
1	0	0	0	0

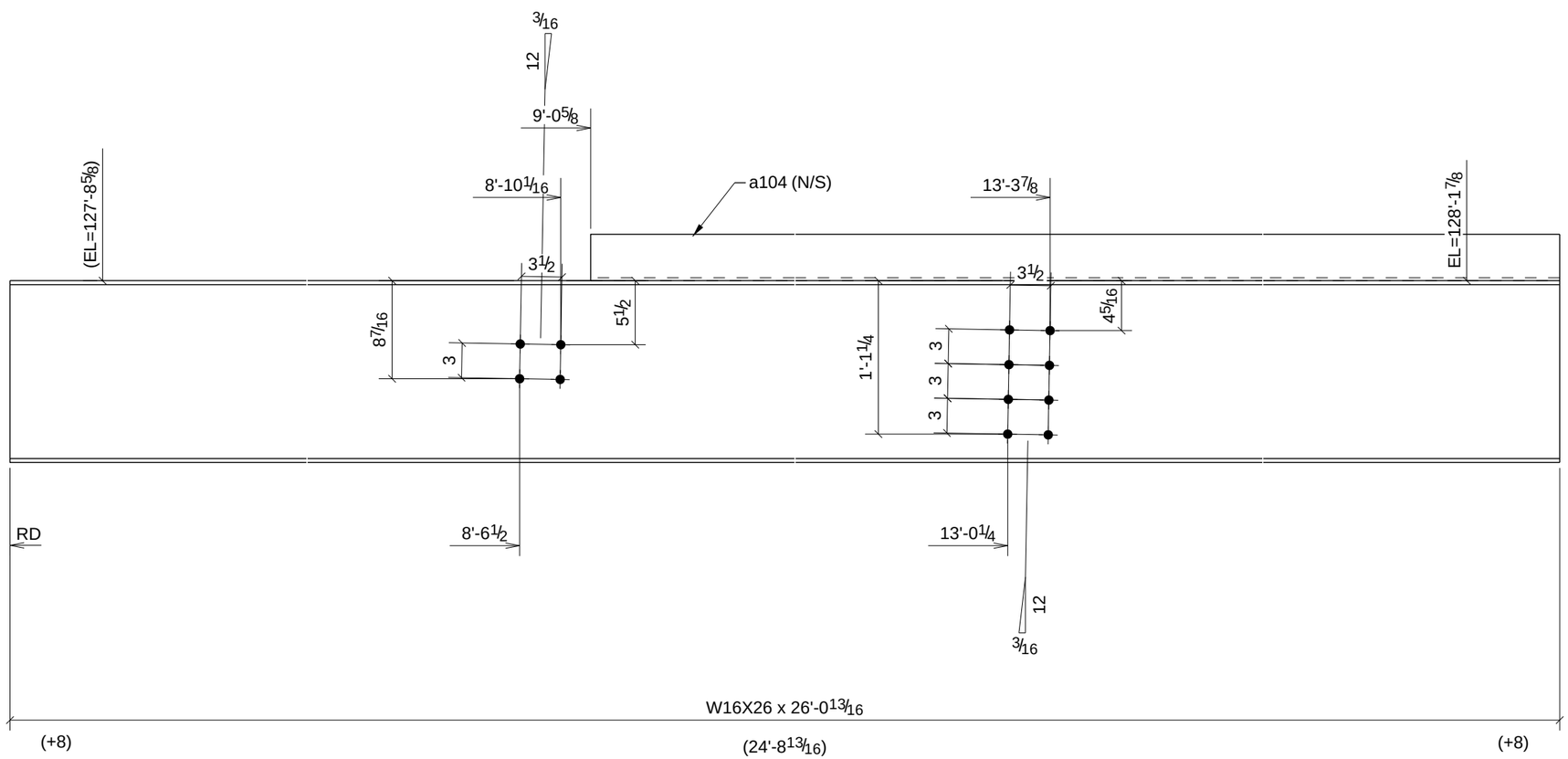

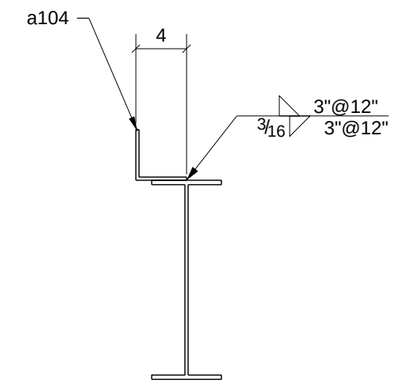

PROCESS CONTROL
PROCESS BY
FAB: _____
FIT AND WELD: _____
INSPECTION: _____
OTHER (IF NEEDED) _____
_____ : _____
_____ : _____
_____ : _____
_____ : _____
REFERENCE LATEST ERECTION DRAWINGS FOR MATERIAL & FABRICATION INFORMATION

ONE - BEAM - B25

W	15 11/16" x 1/4"
F	5 1/2" x 3/8"

DATE	NO.	DESCRIPTION	BY
5/28/11	B	For Checking	TMc
5/16/11	A	For Approval	TMc

BILL OF MATERIAL

Qty Ea.	Qty Tot	Piece Mark	Description	Length	Weight Total	Remarks	Adv Mill #	Steel Grade
	1	B25	BEAM					
	1		W16X26	26'-0 13/16"	681	SQ-2		A992
	1	a104	L4X4X1/4	17'-0 3/16"	112			A36

STEEL ASTM	A992	UNO
ELECTRODES	E70XX L.H.	UNO
WELDS	1/4" FILLET	UNO
OPEN HOLES	13/16" UNO	FINISH PER SPECS
BOLTS	3/4" A325N	UNO
PAINT	1 S/C STD PRIMER U.N.O.	UNO

PROJECT NAME
OLDE ORCHARD ELEMENTARY SCHOOL

LOCATION
800 McNAUGHTEN RD. COLUMBUS, OHIO 43213

CONTRACTOR
THOMAS AND MARKER CONSTRUCTION

ARCHITECT
BRAUN & STEIDL

North Central Fabrication, Ltd.
NORTH CENTRAL FABRICATION
Mansfield, OH 44906
419-529-2744 FAX 419-529-5387 http://www.northcentralfab
AISC CERTIFIED FABRICATOR

DESCRIPTION	DATE	DATE	JOB No.
BEAM	05/18/2011		70234
	DRAWN BY TMc	CHECKED BY TAN	DRG No. B25

PHASE				
1	2	3	4	5
1	0	0	0	0

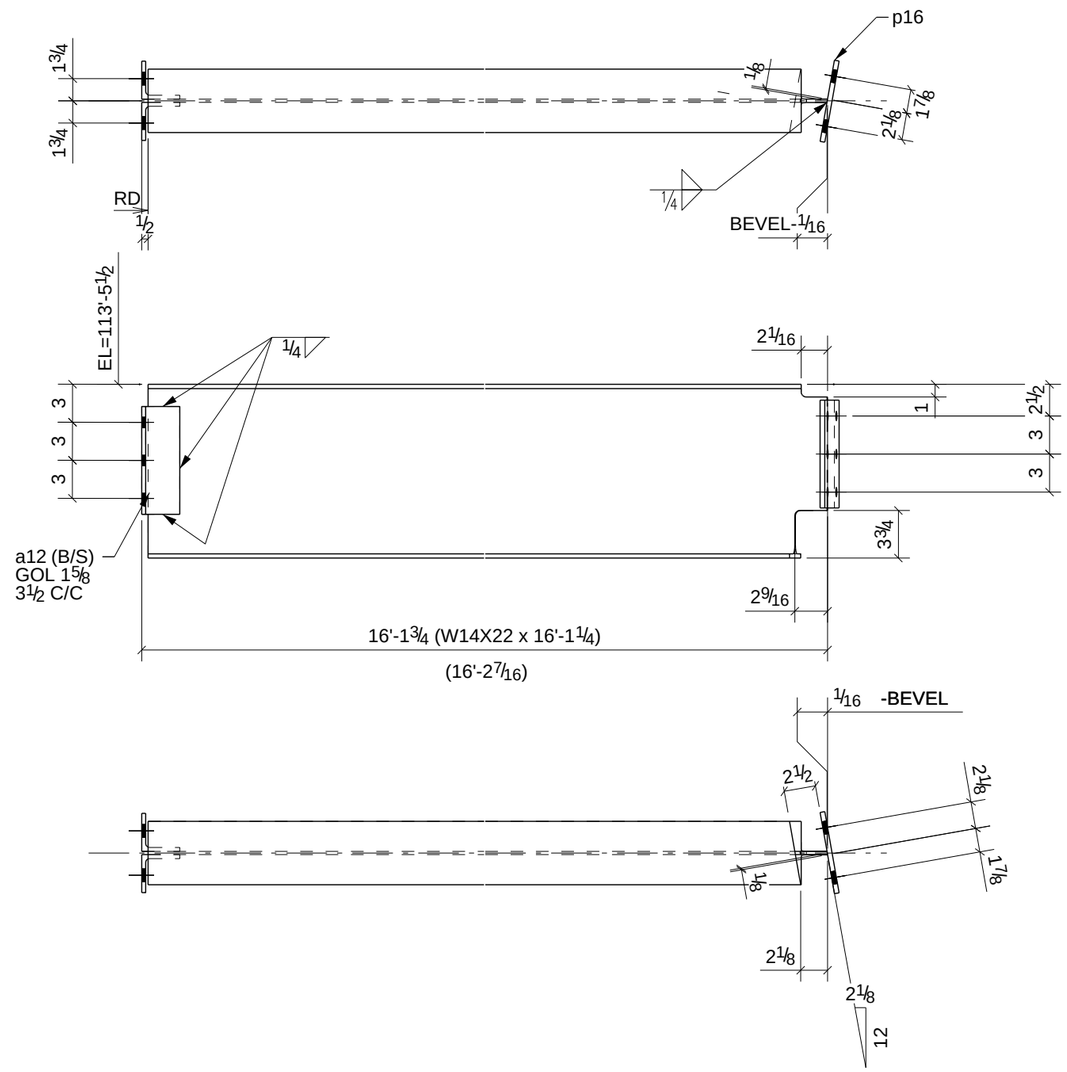

PROCESS CONTROL
PROCESS BY
FAB: _____
FIT AND WELD: _____
INSPECTION: _____
OTHER (IF NEEDED) _____
_____ : _____
_____ : _____
_____ : _____
_____ : _____
REFERENCE LATEST ERECTION DRAWINGS FOR MATERIAL & FABRICATION INFORMATION

ONE - BEAM - B29

W	13 11/16" x 1/4"
F	5" x 5/16"

BILL OF MATERIAL

Qty Ea.	Qty Tot	Piece Mark	Description	Length	Weight Total	Remarks	Adv Mill #	Steel Grade
	1	B29	BEAM					
	1		W14X22	16'-1 1/4"	356	SQ-2		A992
	2	a12	L3X3X5/16	0'-8 1/2"	9			A36
	1	p16	BAR3/8"X6 1/2"	0'-8 1/2"	6			A36

STEEL ASTM	A992	UNO
ELECTRODES	E70XX L.H.	UNO
WELDS	1/4" FILLET	UNO
OPEN HOLES	13/16" UNO	FINISH PER SPECS
BOLTS	3/4" A325N	UNO
PAINT	1 S/C STD PRIMER U.N.O.	UNO

PROJECT NAME
OLDE ORCHARD ELEMENTARY SCHOOL
LOCATION
800 McNAUGHTEN RD. COLUMBUS, OHIO 43213
CONTRACTOR
THOMAS AND MARKER CONSTRUCTION
ARCHITECT
BRAUN & STEIDL

DATE	NO.	DESCRIPTION	BY
5/28/11	B	For Checking	TMc
5/16/11	A	For Approval	TMc

North Central Fabrication, Ltd.
NORTH CENTRAL FABRICATION
Mansfield, OH 44906
419-529-2744 FAX 419-529-5387 http://www.northcentralfab
AISC CERTIFIED FABRICATOR

DESCRIPTION: BEAM	DATE: 05/16/2011	DATE	JOB No. 70234
	DRAWN BY: TMc	CHECKED BY: TAN	DRG No. B29

PHASE				
1	2	3	4	5
1	0	0	0	0

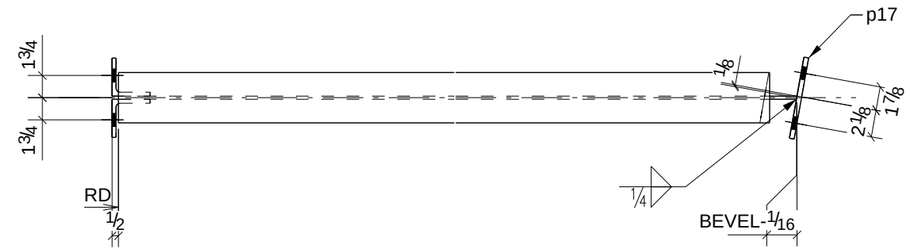

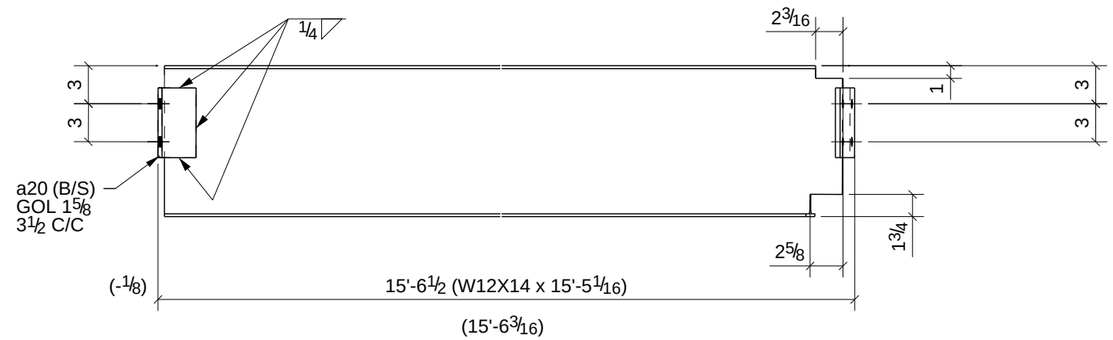

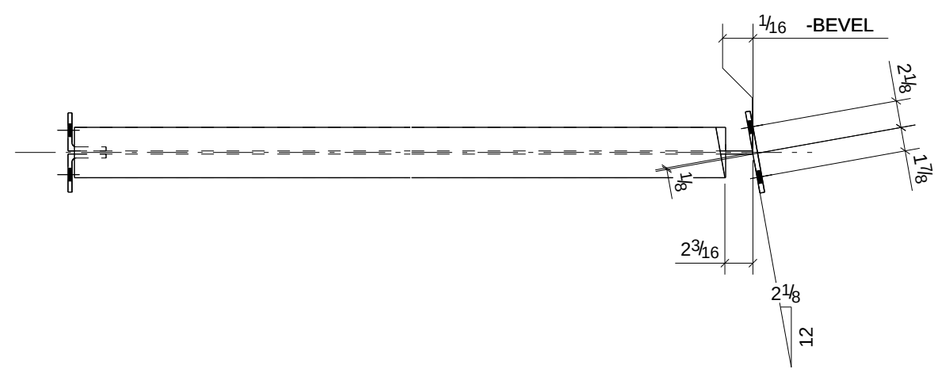

PROCESS CONTROL
PROCESS BY
FAB: _____
FIT AND WELD: _____
INSPECTION: _____
OTHER (IF NEEDED) _____
_____ : _____
_____ : _____
_____ : _____
_____ : _____
REFERENCE LATEST ERECTION DRAWINGS FOR MATERIAL & FABRICATION INFORMATION

ONE - BEAM - B30

W	11 7/8" x 3/16"
F	4" x 1/4"

BILL OF MATERIAL

Qty Ea.	Qty Tot	Piece Mark	Description	Length	Weight Total	Remarks	Adv Mill #	Steel Grade
	1	B30	BEAM					
	1		W12X14	15'-5 1/16"	218	SQ-2		A992
	2	a20	L3X3X5/16	0'-5 1/2"	6			A36
	1	p17	BAR3/8"X5 1/2"	0'-6 1/2"	4			A36

STEEL ASTM	A992		UNO
ELECTRODES	E70XX L.H.		UNO
WELDS	1/4" FILLET		UNO
OPEN HOLES	13/16" UNO	FINISH	PER SPECS
BOLTS	3/4" A325N		UNO
PAINT	1 S/C STD PRIMER U.N.O.		UNO

PROJECT NAME
OLDE ORCHARD ELEMENTARY SCHOOL
LOCATION
800 McNAUGHTEN RD. COLUMBUS, OHIO 43213
CONTRACTOR
THOMAS AND MARKER CONSTRUCTION
ARCHITECT
BRAUN & STEIDL

DATE	NO.	DESCRIPTION	BY
5/28/11	B	For Checking	TMc
5/16/11	A	For Approval	TMc

North Central Fabrication, Ltd.

NORTH CENTRAL FABRICATION
Mansfield, OH 44906
419-529-2744 FAX 419-529-5387 http://www.northcentralfab

AISC CERTIFIED FABRICATOR

DESCRIPTION	DATE	DATE	JOB No.
BEAM	05/14/2011		70234
	DRAWN BY TMc	CHECKED BY TAN	DRG No. B30

PHASE				
1	2	3	4	5
1	0	0	0	0

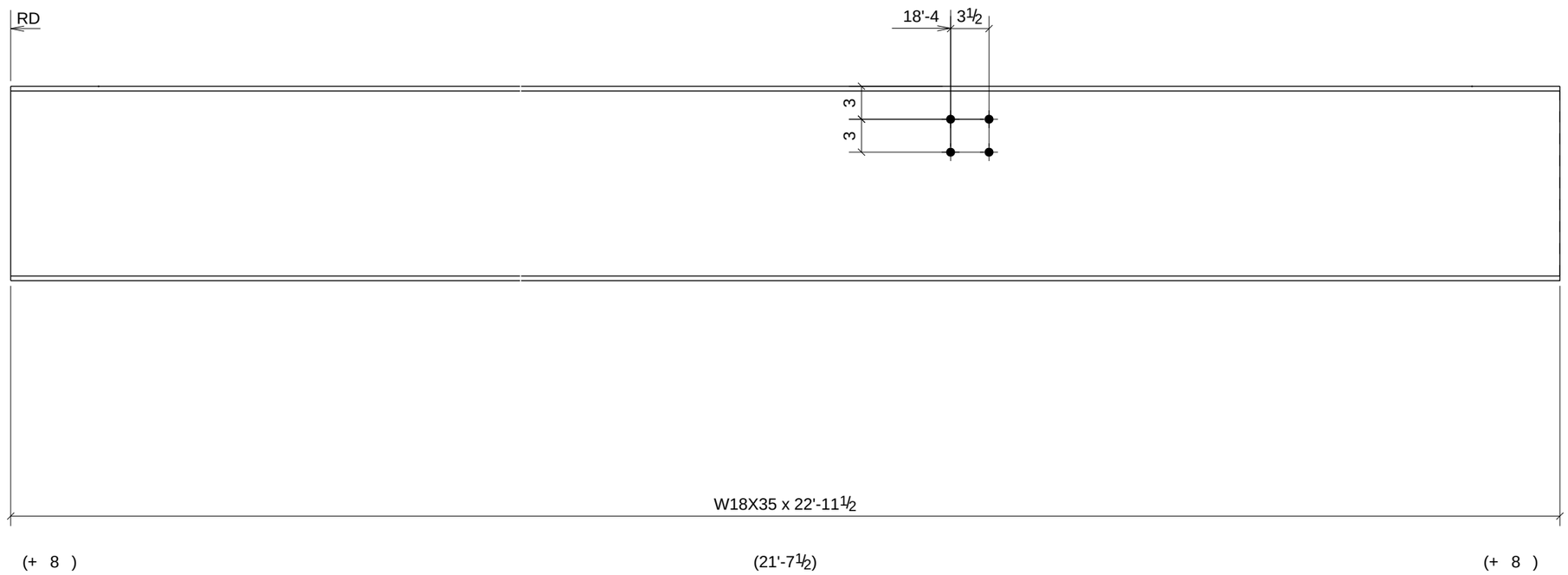

PROCESS CONTROL
PROCESS BY
FAB: _____
FIT AND WELD: _____
INSPECTION: _____
OTHER (IF NEEDED) _____
_____ : _____
_____ : _____
_____ : _____
_____ : _____
REFERENCE LATEST ERECTION DRAWINGS FOR MATERIAL & FABRICATION INFORMATION

ONE - BEAM - B33

W	17 11/16" x 1/4"
F	6" x 7/16"

DATE	NO.	DESCRIPTION	BY
5/28/11	B	For Checking	TMc
5/16/11	A	For Approval	TMc

BILL OF MATERIAL

Qty Ea.	Qty Tot	Piece Mark	Description	Length	Weight Total	Remarks	Adv Mill #	Steel Grade
	1	B33	BEAM					
	1		W18X35	22'-11 1/2"	805	SQ-2		A992

STEEL ASTM	A992	UNO
ELECTRODES	E70XX L.H.	UNO
WELDS	1/4" FILLET	UNO
OPEN HOLES	13/16" UNO	FINISH PER SPECS
BOLTS	3/4" A325N	UNO
PAINT	1 S/C STD PRIMER U.N.O.	UNO

PROJECT NAME
OLDE ORCHARD ELEMENTARY SCHOOL

LOCATION
800 McNAUGHTEN RD. COLUMBUS, OHIO 43213

CONTRACTOR
THOMAS AND MARKER CONSTRUCTION

ARCHITECT
BRAUN & STEIDL

North Central Fabrication, Ltd.
NORTH CENTRAL FABRICATION
Mansfield, OH 44906
419-529-2744 FAX 419-529-5387 http://www.northcentralfab
AISC CERTIFIED FABRICATOR

DESCRIPTION	DATE	DATE	JOB No.
BEAM	05/18/2011		70234
	DRAWN BY TMc	CHECKED BY TAN	DRG No. B33

PHASE				
1	2	3	4	5
1	0	0	0	0

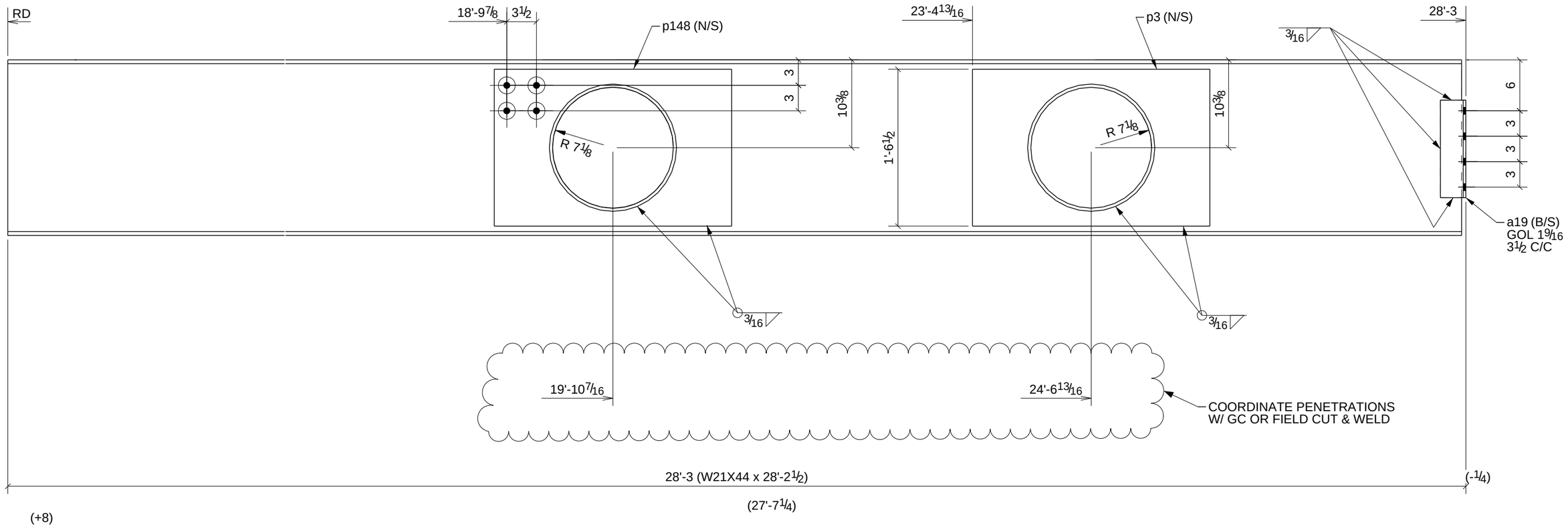

PROCESS CONTROL
PROCESS BY
FAB: _____
FIT AND WELD: _____
INSPECTION: _____
OTHER (IF NEEDED)
_____ : _____
_____ : _____
_____ : _____
_____ : _____
REFERENCE LATEST ERECTION DRAWINGS FOR MATERIAL & FABRICATION INFORMATION

ONE - BEAM - B36

W	20 11/16" x 3/8"
F	6 1/2" x 7/16"

BILL OF MATERIAL

Qty Ea.	Qty Tot	Piece Mark	Description	Length	Weight Total	Remarks	Adv Mill #	Steel Grade
	1	B36	BEAM					
	1		W21X44	28'-2 1/2"	1248	SQ-2		A992
	2	a19	L3X3X5/16	0'-11 1/2"	12			A36
	1	p3	PL1/2"X18 1/2"	2'-4"	49			A36
	1	p148	PL1/2"X18 1/2"	2'-4"	49			A36

STEEL ASTM	A992		UNO
ELECTRODES	E70XX L.H.		UNO
WELDS	1/4" FILLET		UNO
OPEN HOLES	13/16"	UNO	FINISH PER SPECS
BOLTS	3/4" A325N		UNO
PAINT	1 S/C STD PRIMER U.N.O.		UNO

PROJECT NAME
OLDE ORCHARD ELEMENTARY SCHOOL

LOCATION
800 McNAUGHTEN RD. COLUMBUS, OHIO 43213

CONTRACTOR
THOMAS AND MARKER CONSTRUCTION

ARCHITECT
BRAUN & STEIDL

DATE	NO.	DESCRIPTION	BY
5/28/11	B	For Checking	TMc
5/16/11	A	For Approval	TMc

North Central Fabrication, Ltd.

NORTH CENTRAL FABRICATION
Mansfield, OH 44906
419-529-2744 FAX 419-529-5387 http://www.northcentralfab

AISC CERTIFIED FABRICATOR

DESCRIPTION	DATE	DATE	JOB No.
BEAM	05/14/2011		70234
	DRAWN BY TMc	CHECKED BY TAN	DRG No. B36

PHASE				
1	2	3	4	5
1	0	0	0	0

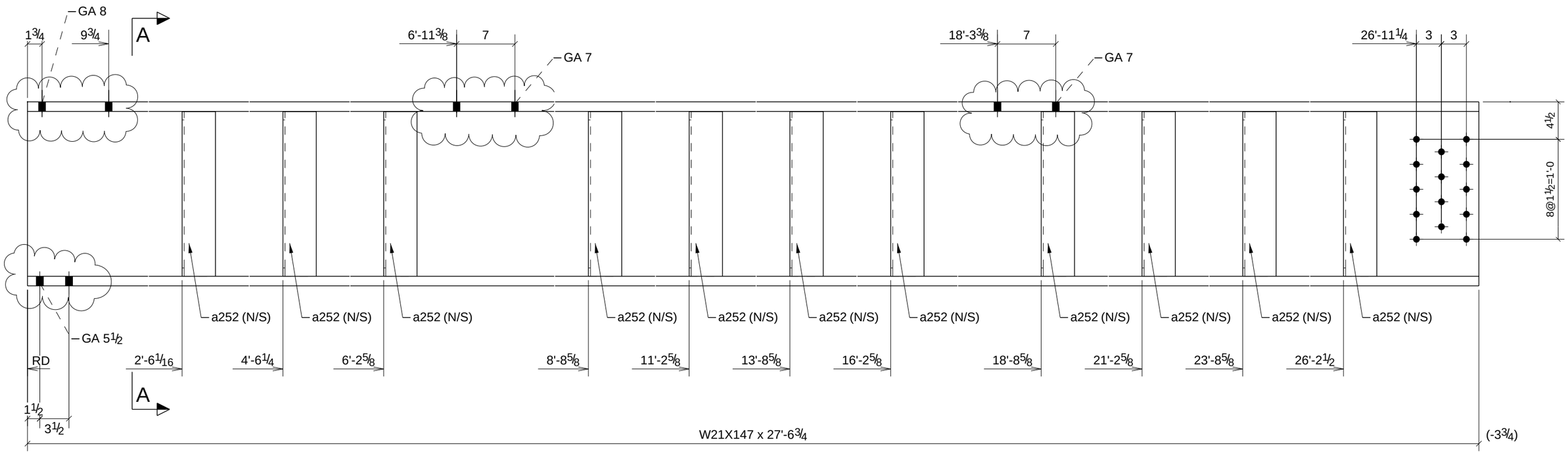

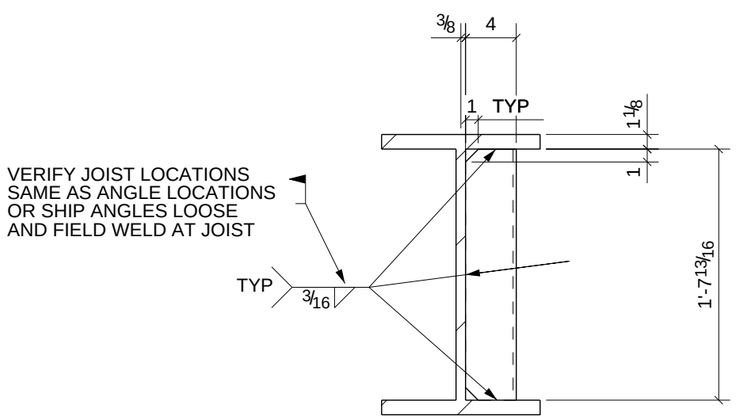

A - A

ONE - BEAM - B37

W	22 1/8" x 3/4"
F	12 1/2" x 1 1/8"

PROCESS CONTROL
PROCESS BY
FAB: _____
FIT AND WELD: _____
INSPECTION: _____
OTHER (IF NEEDED) _____
_____ : _____
_____ : _____
_____ : _____
_____ : _____
_____ : _____
REFERENCE LATEST ERECTION DRAWINGS FOR MATERIAL & FABRICATION INFORMATION

DATE	NO.	DESCRIPTION	BY
5/28/11	B	For Checking	TMc
5/16/11	A	For Approval	TMc

BILL OF MATERIAL

Qty Ea.	Qty Tot	Piece Mark	Description	Length	Weight Total	Remarks	Adv Mill #	Steel Grade
	1	B37	BEAM					
	1		W21X147	27'-6 3/4"	4052	SQ-2		A992
	11	a252	L4X4X1/4	1'-7 13/16"	120			A36

STEEL ASTM	A992	UNO
ELECTRODES	E70XX L.H.	UNO
WELDS	1/4" FILLET	UNO
OPEN HOLES	13/16" UNO	FINISH PER SPECS
BOLTS	3/4" A325N	UNO
PAINT	1 S/C STD PRIMER U.N.O.	UNO

PROJECT NAME
OLDE ORCHARD ELEMENTARY SCHOOL

LOCATION
800 McNAUGHTEN RD. COLUMBUS, OHIO 43213

CONTRACTOR
THOMAS AND MARKER CONSTRUCTION

ARCHITECT
BRAUN & STEIDL

North Central Fabrication, Ltd.
NORTH CENTRAL FABRICATION
Mansfield, OH 44906
419-529-2744 FAX 419-529-5387 http://www.northcentralfab
AISC CERTIFIED FABRICATOR

DESCRIPTION	DATE	DATE	JOB No.
BEAM	05/14/2011		70234
	DRAWN BY TMc	CHECKED BY TAN	DRG No. B37

PHASE				
1	2	3	4	5
1	0	0	0	0

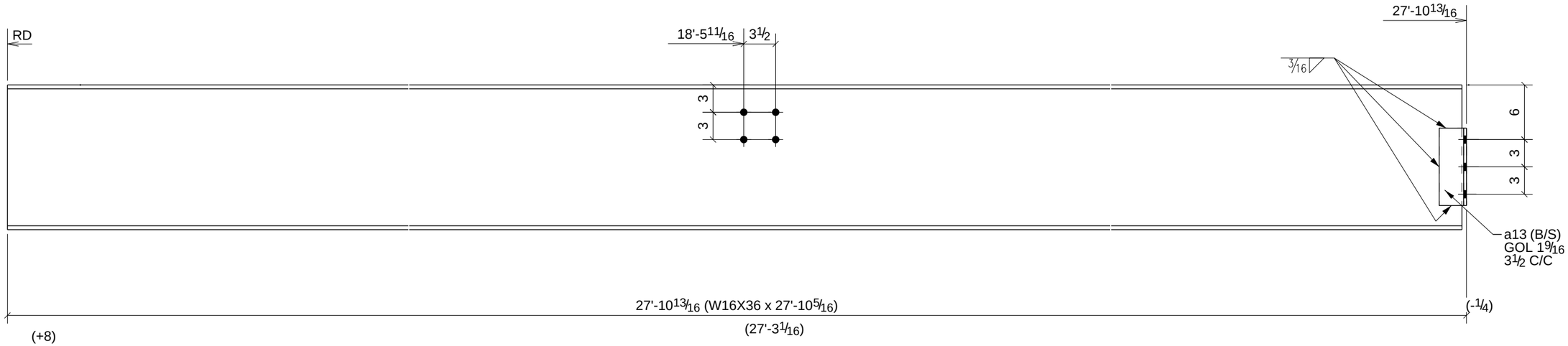

PROCESS CONTROL
PROCESS BY
FAB: _____
FIT AND WELD: _____
INSPECTION: _____
OTHER (IF NEEDED) _____
_____ : _____
_____ : _____
_____ : _____
_____ : _____
REFERENCE LATEST ERECTION DRAWINGS FOR MATERIAL & FABRICATION INFORMATION

ONE - BEAM - B38

W	15 7/8" x 1/4"
F	7" x 7/16"

DATE	NO.	DESCRIPTION	BY
5/28/11	B	For Checking	TMc
5/16/11	A	For Approval	TMc

BILL OF MATERIAL

Qty Ea.	Qty Tot	Piece Mark	Description	Length	Weight Total	Remarks	Adv Mill #	Steel Grade
	1	B38	BEAM					
	1		W16X36	27'-10 5/16"	1005	SQ-2		A992
	2	a13	L3X3X5/16	0'-8 1/2"	9			A36

STEEL ASTM	A992	UNO
ELECTRODES	E70XX L.H.	UNO
WELDS	1/4" FILLET	UNO
OPEN HOLES	13/16" UNO	FINISH PER SPECS
BOLTS	3/4" A325N	UNO
PAINT	1 S/C STD PRIMER U.N.O.	UNO

PROJECT NAME
OLDE ORCHARD ELEMENTARY SCHOOL

LOCATION
800 McNAUGHTEN RD. COLUMBUS, OHIO 43213

CONTRACTOR
THOMAS AND MARKER CONSTRUCTION

ARCHITECT
BRAUN & STEIDL

North Central Fabrication, Ltd.
NORTH CENTRAL FABRICATION
Mansfield, OH 44906
419-529-2744 FAX 419-529-5387 http://www.northcentralfab
AISC CERTIFIED FABRICATOR

DESCRIPTION	DATE	DATE	JOB No.
BEAM	05/14/2011		70234
	DRAWN BY TMc	CHECKED BY TAN	DRG No. B38

PHASE				
1	2	3	4	5
1	0	0	0	0

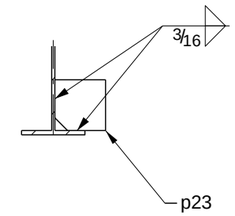

A - A

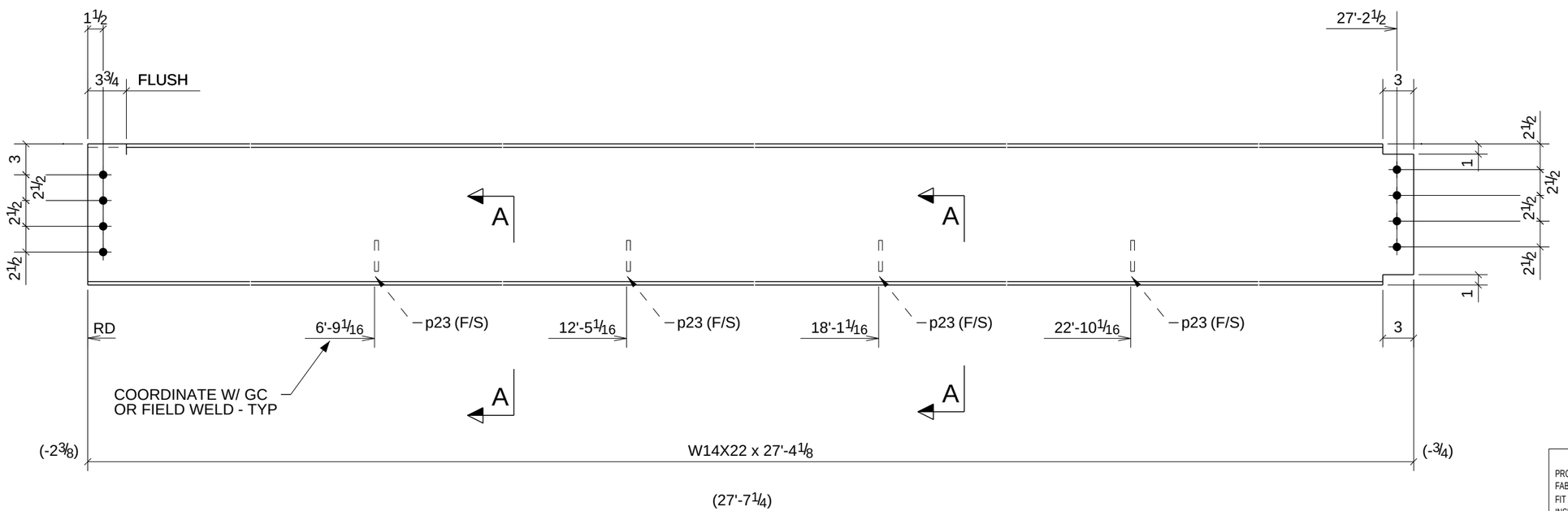

PROCESS CONTROL
PROCESS BY
FAB: _____
FIT AND WELD: _____
INSPECTION: _____
OTHER (IF NEEDED) _____
_____ : _____
_____ : _____
_____ : _____
_____ : _____
REFERENCE LATEST ERECTION DRAWINGS FOR MATERIAL & FABRICATION INFORMATION

ONE - BEAM - B39

W	13 11/16" x 1/4"
F	5" x 5/16"

DATE	NO.	DESCRIPTION	BY
5/28/11	B	For Checking	TMc
5/16/11	A	For Approval	TMc

BILL OF MATERIAL

Qty Ea.	Qty Tot	Piece Mark	Description	Length	Weight Total	Remarks	Adv Mill #	Steel Grade
	1	B39	BEAM					
	1		W14X22	27'-4 1/8"	604	SQ-2		A992
	4	p23	BAR3/8"X4"	0'-4"	7			A36

STEEL ASTM	A992	UNO
ELECTRODES	E70XX L.H.	UNO
WELDS	1/4" FILLET	UNO
OPEN HOLES	13/16" UNO	FINISH PER SPECS
BOLTS	3/4" A325N	UNO
PAINT	1 S/C STD PRIMER U.N.O.	UNO

PROJECT NAME
OLDE ORCHARD ELEMENTARY SCHOOL
LOCATION
800 McNAUGHTEN RD. COLUMBUS, OHIO 43213
CONTRACTOR
THOMAS AND MARKER CONSTRUCTION
ARCHITECT
BRAUN & STEIDL

North Central Fabrication, Ltd.
NORTH CENTRAL FABRICATION
Mansfield, OH 44906
419-529-2744 FAX 419-529-5387 http://www.northcentralfab
AISC CERTIFIED FABRICATOR

DESCRIPTION	DATE	DATE	JOB No.
BEAM	05/15/2011		70234
	DRAWN BY TMc	CHECKED BY TAN	DRG No. B39

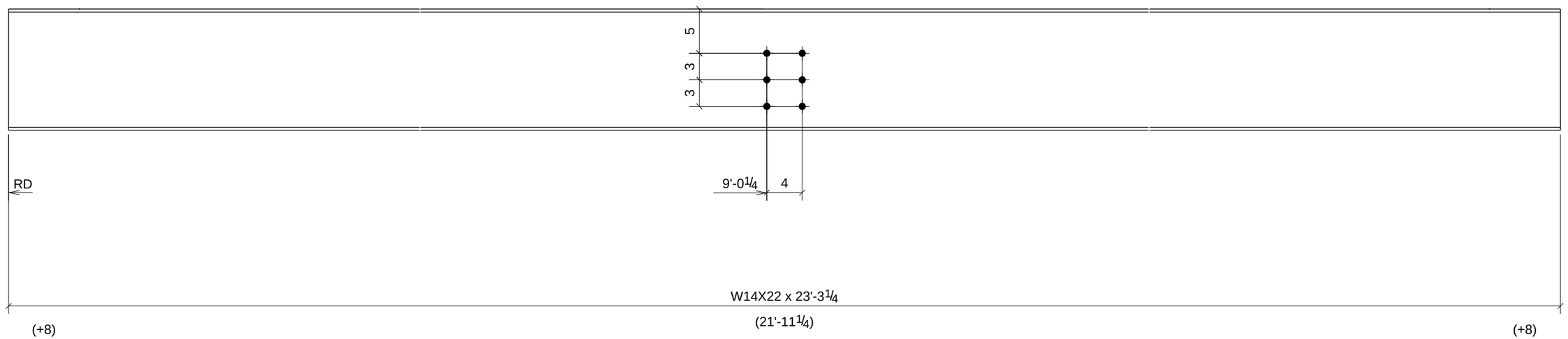

DATE	NO.	DESCRIPTION	BY
5/28/11	B	For Checking	TMc
5/16/11	A	For Approval	TMc

BILL OF MATERIAL

Qty Ea.	Qty Tot	Piece Mark	Description	Length	Weight Total	Remarks	Adv Mill #	Steel Grade
	1	B40	BEAM					
	1		W14X22	23'-3 1/4"	514	SQ-2		A992

STEEL ASTM	A992	UNO
ELECTRODES	E70XX L.H.	UNO
WELDS	1/4" FILLET	UNO
OPEN HOLES	13/16" UNO	FINISH PER SPECS
BOLTS	3/4" A325N	UNO
PAINT	1 S/C STD PRIMER U.N.O.	UNO

PROJECT NAME
OLDE ORCHARD ELEMENTARY SCHOOL

LOCATION
800 McNAUGHTEN RD. COLUMBUS, OHIO 43213

CONTRACTOR
THOMAS AND MARKER CONSTRUCTION

ARCHITECT
BRAUN & STEIDL

North Central Fabrication, Ltd.
NORTH CENTRAL FABRICATION
Mansfield, OH 44906
419-529-2744 FAX 419-529-5387 http://www.northcentralfab
AISC CERTIFIED FABRICATOR

DESCRIPTION	DATE	DATE	JOB No.
BEAM	05/18/2011		70234
	DRAWN BY TMc	CHECKED BY TAN	DRG No. B40

PHASE				
1	2	3	4	5
1	0	0	0	0

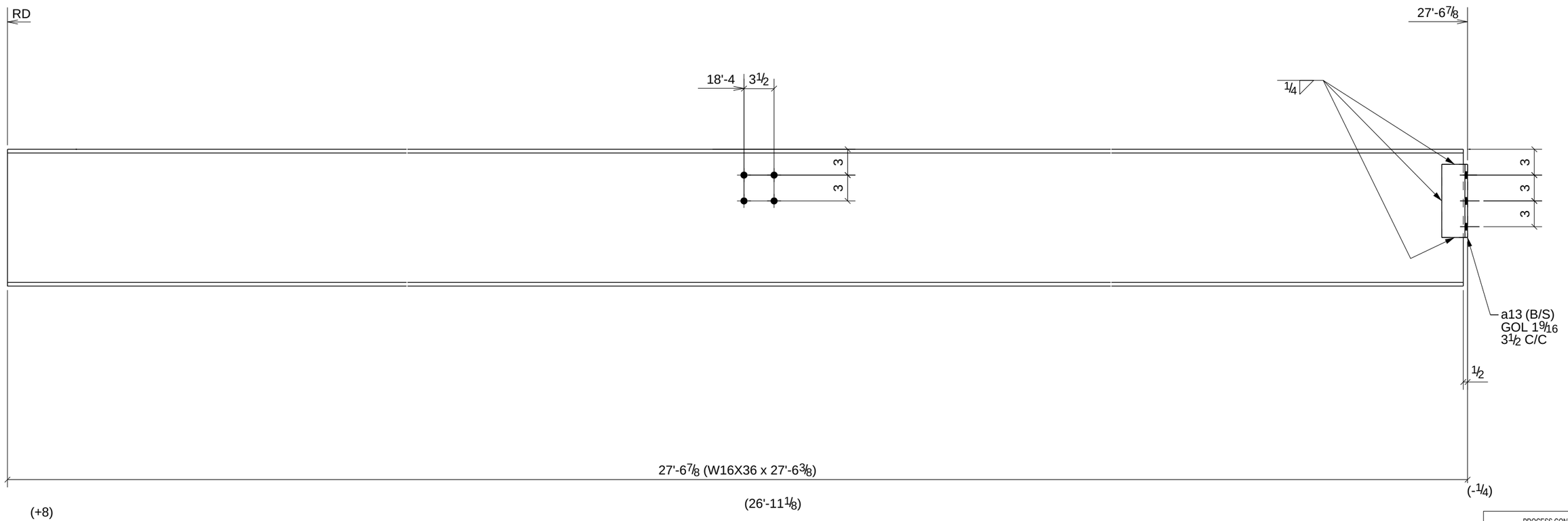

PROCESS CONTROL
PROCESS BY
FAB: _____
FIT AND WELD: _____
INSPECTION: _____
OTHER (IF NEEDED) _____
_____ : _____
_____ : _____
_____ : _____
_____ : _____
REFERENCE LATEST ERECTION DRAWINGS FOR MATERIAL & FABRICATION INFORMATION

ONE - BEAM - B41

W	15 7/8" x 1/4"
F	7" x 7/16"

DATE	NO.	DESCRIPTION	BY
5/28/11	B	For Checking	TMc
5/16/11	A	For Approval	TMc

BILL OF MATERIAL

Qty Ea.	Qty Tot	Piece Mark	Description	Length	Weight Total	Remarks	Adv Mill #	Steel Grade
	1	B41	BEAM					
	1		W16X36	27'-6 3/8"	993	SQ-2		A992
	2	a13	L3X3X5/16	0'-8 1/2"	9			A36

STEEL ASTM	A992	UNO
ELECTRODES	E70XX L.H.	UNO
WELDS	1/4" FILLET	UNO
OPEN HOLES	13/16" UNO	FINISH PER SPECS
BOLTS	3/4" A325N	UNO
PAINT	1 S/C STD PRIMER U.N.O.	UNO

PROJECT NAME
OLDE ORCHARD ELEMENTARY SCHOOL

LOCATION
800 McNAUGHTEN RD. COLUMBUS, OHIO 43213

CONTRACTOR
THOMAS AND MARKER CONSTRUCTION

ARCHITECT
BRAUN & STEIDL

North Central Fabrication, Ltd.
NORTH CENTRAL FABRICATION
Mansfield, OH 44906
419-529-2744 FAX 419-529-5387 http://www.northcentralfab
AISC CERTIFIED FABRICATOR

DESCRIPTION	DATE	DATE	JOB No.
BEAM	05/18/2011		70234
	DRAWN BY TMc	CHECKED BY TAN	DRG No. B41

PHASE				
1	2	3	4	5
1	0	0	0	0

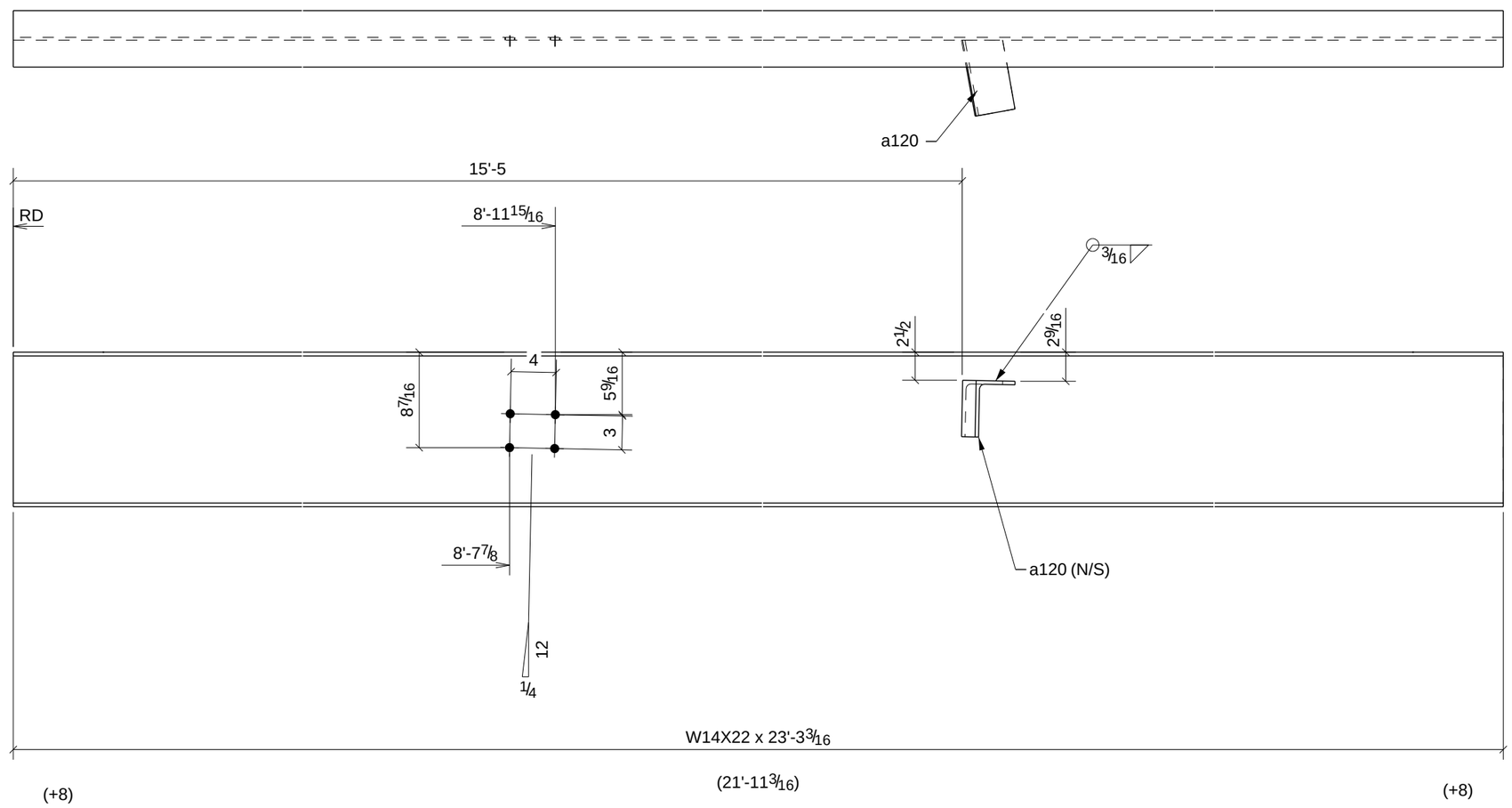

PROCESS CONTROL
PROCESS BY
FAB: _____
FIT AND WELD: _____
INSPECTION: _____
OTHER (IF NEEDED) _____
_____ : _____
_____ : _____
_____ : _____
_____ : _____
REFERENCE LATEST ERECTION DRAWINGS FOR MATERIAL & FABRICATION INFORMATION

ONE - BEAM - B42

W	13 11/16" x 1/4"
F	5" x 5/16"

DATE	NO.	DESCRIPTION	BY
5/28/11	B	For Checking	TMc
5/16/11	A	For Approval	TMc

BILL OF MATERIAL

Qty Ea.	Qty Tot	Piece Mark	Description	Length	Weight Total	Remarks	Adv Mill #	Steel Grade
	1	B42	BEAM					
	1		W14X22	23'-3 3/16"	514	SQ-2		A992
	1	a120	L5X3-1/2X5/16	0'-6 13/16"	5			A36

STEEL ASTM	A992	UNO
ELECTRODES	E70XX L.H.	UNO
WELDS	1/4" FILLET	UNO
OPEN HOLES	13/16" UNO	FINISH PER SPECS
BOLTS	3/4" A325N	UNO
PAINT	1 S/C STD PRIMER U.N.O.	UNO

PROJECT NAME
OLDE ORCHARD ELEMENTARY SCHOOL

LOCATION
800 McNAUGHTEN RD. COLUMBUS, OHIO 43213

CONTRACTOR
THOMAS AND MARKER CONSTRUCTION

ARCHITECT
BRAUN & STEIDL

North Central Fabrication, Ltd.
NORTH CENTRAL FABRICATION
Mansfield, OH 44906
419-529-2744 FAX 419-529-5387 http://www.northcentralfab
AISC CERTIFIED FABRICATOR

DESCRIPTION	DATE	DATE	JOB No.
BEAM	05/18/2011		70234
	DRAWN BY TMc	CHECKED BY TAN	DRG No. B42

PHASE				
1	2	3	4	5
5	0	0	0	0

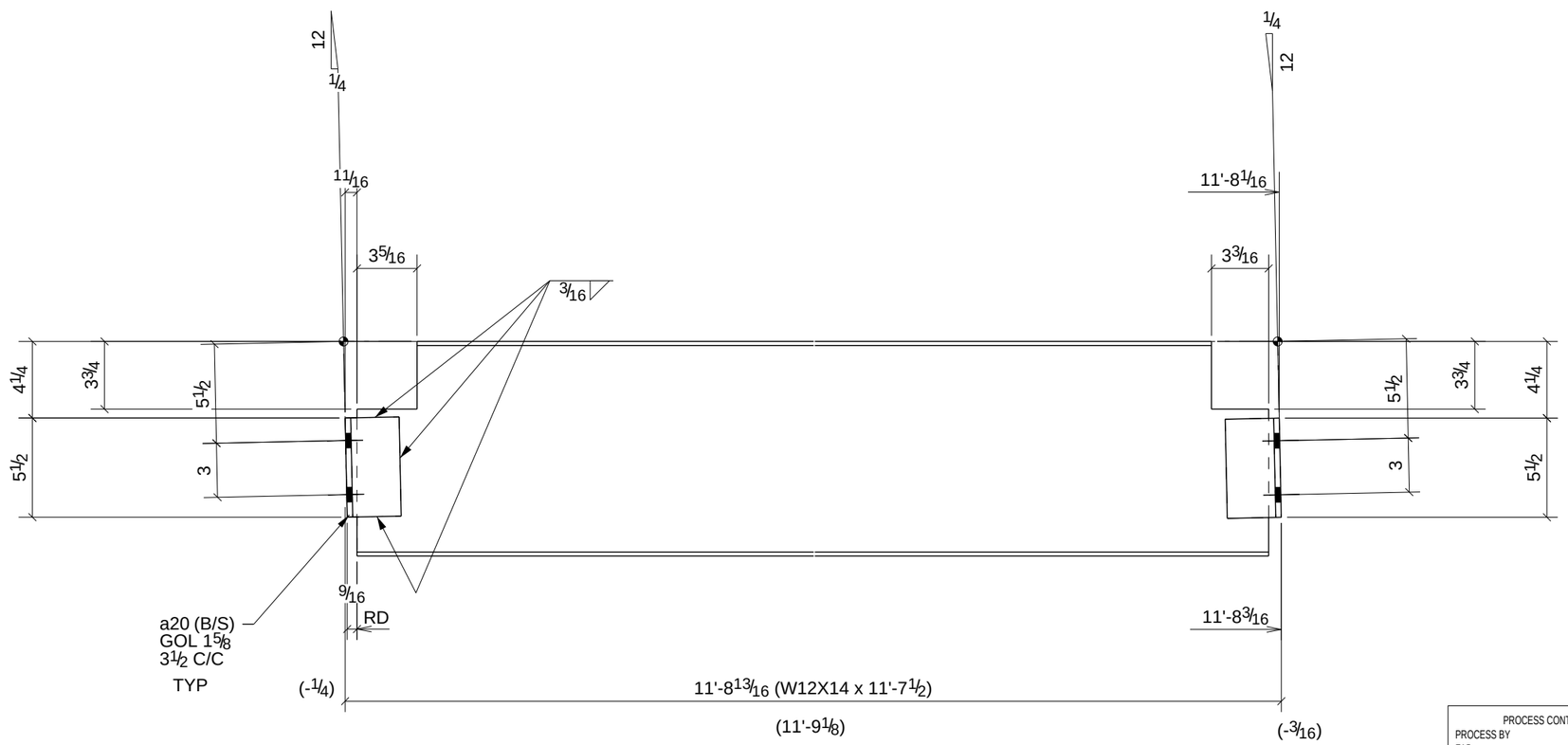

PROCESS CONTROL
PROCESS BY
FAB: _____
FIT AND WELD: _____
INSPECTION: _____
OTHER (IF NEEDED) _____
_____ : _____
_____ : _____
_____ : _____
_____ : _____
REFERENCE LATEST ERECTION DRAWINGS FOR MATERIAL & FABRICATION INFORMATION

5 - BEAMS - B43

W	11 7/8" x 3/16"
F	4" x 1/4"

DATE	NO.	DESCRIPTION	BY
5/28/11	B	For Checking	TMc
5/16/11	A	For Approval	TMc

BILL OF MATERIAL

Qty Ea.	Qty Tot	Piece Mark	Description	Length	Weight Total	Remarks	Adv Mill #	Steel Grade
	5	B43	BEAMS					
	5		W12X14	11'-7 1/2"	823	SQ-2		A992
	20	a20	L3X3X5/16	0'-5 1/2"	56			A36

STEEL ASTM	A992		UNO
ELECTRODES	E70XX L.H.		UNO
WELDS	1/4" FILLET		UNO
OPEN HOLES	13/16"	UNO	FINISH PER SPECS
BOLTS	3/4" A325N		UNO
PAINT	1 S/C STD PRIMER U.N.O.		UNO

PROJECT NAME
OLDE ORCHARD ELEMENTARY SCHOOL

LOCATION
800 McNAUGHTEN RD. COLUMBUS, OHIO 43213

CONTRACTOR
THOMAS AND MARKER CONSTRUCTION

ARCHITECT
BRAUN & STEIDL

North Central Fabrication, Ltd.
NORTH CENTRAL FABRICATION
Mansfield, OH 44906
419-529-2744 FAX 419-529-5387 http://www.northcentralfab
AISC CERTIFIED FABRICATOR

DESCRIPTION	DATE	DATE	JOB No.
BEAM	05/14/2011		70234
	DRAWN BY TMc	CHECKED BY TAN	DRG No. B43

PHASE				
1	2	3	4	5
2	0	0	0	0

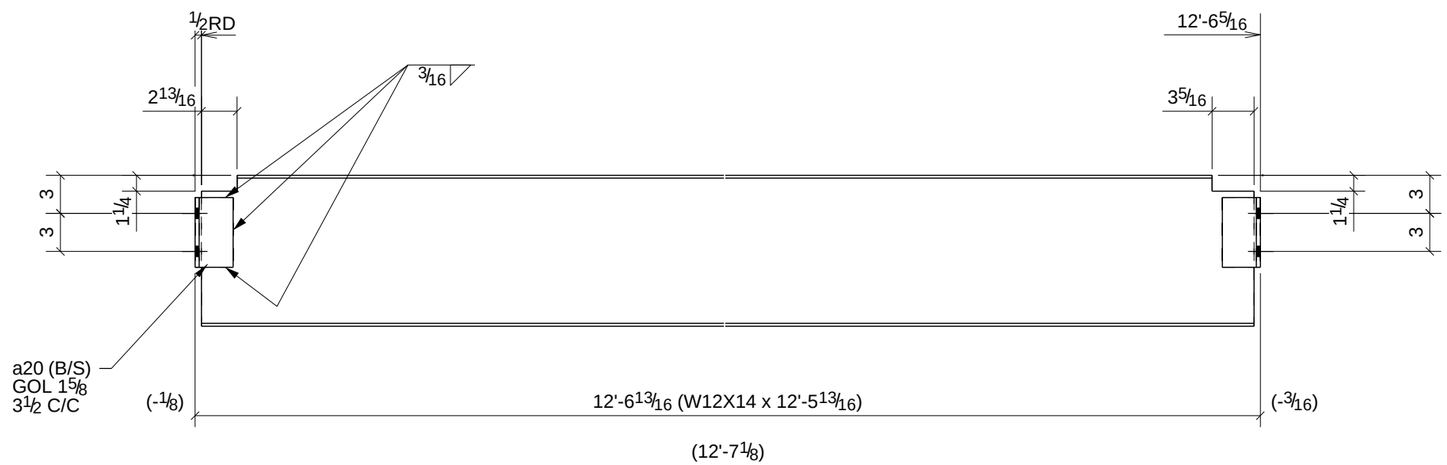

PROCESS CONTROL
PROCESS BY
FAB: _____
FIT AND WELD: _____
INSPECTION: _____
OTHER (IF NEEDED)
_____ : _____
_____ : _____
_____ : _____
_____ : _____
_____ : _____
REFERENCE LATEST ERECTION DRAWINGS FOR MATERIAL & FABRICATION INFORMATION

2 - BEAMS - B45

W	11 7/8" x 3/16"
F	4" x 1/4"

DATE	NO.	DESCRIPTION	BY
5/28/11	B	For Checking	TMc
5/16/11	A	For Approval	TMc

BILL OF MATERIAL

Qty Ea.	Qty Tot	Piece Mark	Description	Length	Weight Total	Remarks	Adv Mill #	Steel Grade
	2	B45	BEAMS					
	2		W12X14	12'-5 13/16"	354	SQ-2		A992
	8	a20	L3X3X5/16	0'-5 1/2"	22			A36

STEEL ASTM	A992	UNO
ELECTRODES	E70XX L.H.	UNO
WELDS	1/4" FILLET	UNO
OPEN HOLES	13/16" UNO	FINISH PER SPECS
BOLTS	3/4" A325N	UNO
PAINT	1 S/C STD PRIMER U.N.O.	UNO

PROJECT NAME
OLDE ORCHARD ELEMENTARY SCHOOL

LOCATION
800 McNAUGHTEN RD. COLUMBUS, OHIO 43213

CONTRACTOR
THOMAS AND MARKER CONSTRUCTION

ARCHITECT
BRAUN & STEIDL

North Central Fabrication, Ltd.
NORTH CENTRAL FABRICATION
Mansfield, OH 44906
419-529-2744 FAX 419-529-5387 http://www.northcentralfab
AISC CERTIFIED FABRICATOR

DESCRIPTION	DATE	DATE	JOB No.
BEAM	05/18/2011		70234
	DRAWN BY TMc	CHECKED BY TAN	DRG No. B45

PHASE				
1	2	3	4	5
1	0	0	0	0

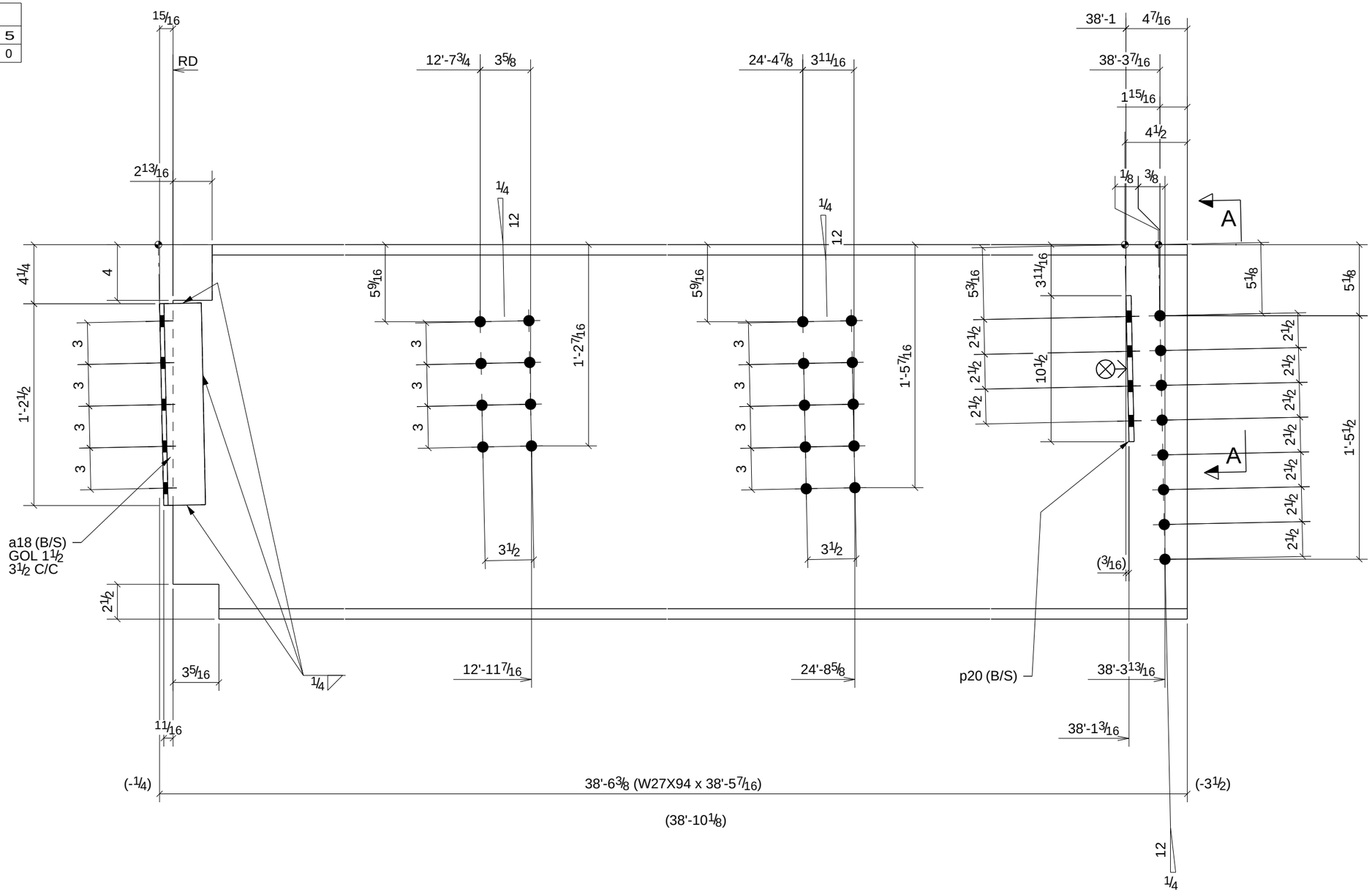

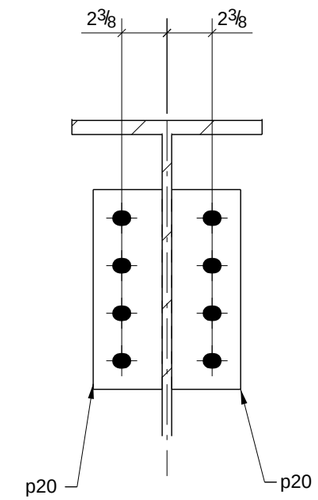

A - A

PROCESS CONTROL	
PROCESS BY	
FAB:	
FIT AND WELD:	
INSPECTION:	
OTHER (IF NEEDED)	
	:
	:
	:
	:
	:

REFERENCE LATEST ERECTION DRAWINGS FOR MATERIAL & FABRICATION INFORMATION

ONE - BEAM - B46

W	26 7/8" x 1/2"
F	10" x 3/4"

BILL OF MATERIAL

Qty Ea.	Qty Tot	Piece Mark	Description	Length	Weight Total	Remarks	Adv Mill #	Steel Grade
	1	B46	BEAM					
	1		W27X94	38'-5 7/16"	3625	SQ-2		A992
	2	a18	L3X3X5/16	1'-2 1/2"	15			A36
	2	p20	PL3/8"X3 5/8"	0'-10 1/2"	8			A36

STEEL ASTM	A992		UNO
ELECTRODES	E70XX L.H.		UNO
WELDS	1/4" FILLET		UNO
OPEN HOLES	13/16"	UNO	FINISH PER SPECS
BOLTS	3/4" A325N		UNO
PAINT	1 S/C STD PRIMER U.N.O.		UNO

PROJECT NAME
OLDE ORCHARD ELEMENTARY SCHOOL

LOCATION
800 McNAUGHTEN RD. COLUMBUS, OHIO 43213

CONTRACTOR
THOMAS AND MARKER CONSTRUCTION

ARCHITECT
BRAUN & STEIDL

DATE	NO.	DESCRIPTION	BY
5/28/11	B	For Checking	TMc
5/16/11	A	For Approval	TMc

North Central Fabrication, Ltd.

NORTH CENTRAL FABRICATION

Mansfield, OH 44906

419-529-2744 FAX 419-529-5387 http://www.northcentralfab

AISC CERTIFIED FABRICATOR

DESCRIPTION	DATE	DATE	JOB No.
BEAM	05/14/2011		70234
	DRAWN BY TMc	CHECKED BY TAN	DRG No. B46

PHASE				
1	2	3	4	5
2	0	0	0	0

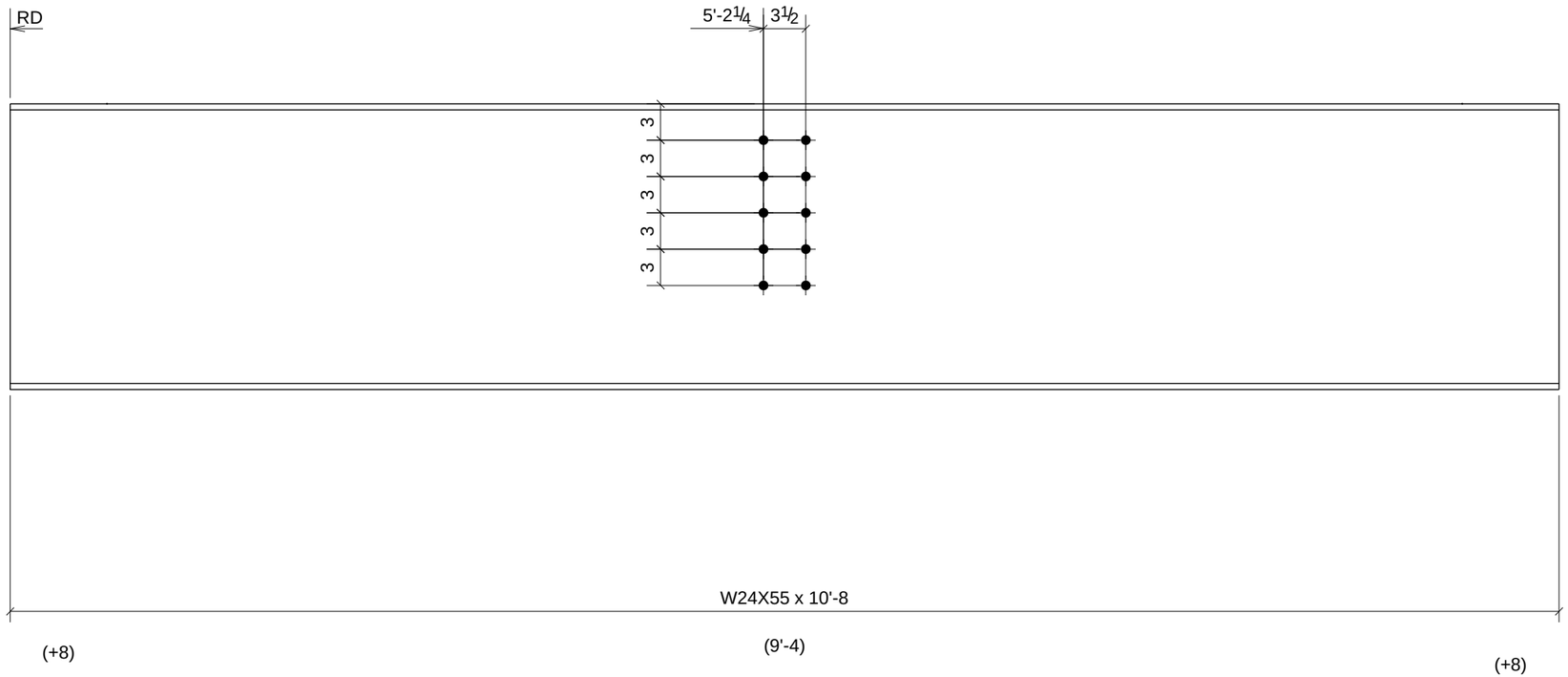

PROCESS CONTROL
PROCESS BY
FAB: _____
FIT AND WELD: _____
INSPECTION: _____
OTHER (IF NEEDED)
_____ : _____
_____ : _____
_____ : _____
_____ : _____
_____ : _____
REFERENCE LATEST ERECTION DRAWINGS FOR MATERIAL & FABRICATION INFORMATION

2 - BEAMS - B47

W	23 5/8" x 3/8"
F	7" x 1/2"

DATE	NO.	DESCRIPTION	BY
5/28/11	B	For Checking	TMc
5/16/11	A	For Approval	TMc

BILL OF MATERIAL

Qty Ea.	Qty Tot	Piece Mark	Description	Length	Weight Total	Remarks	Adv Mill #	Steel Grade
	2	B47	BEAMS					
	2		W24X55	10'-8"	1176	SQ-2		A992

STEEL ASTM	A992	UNO
ELECTRODES	E70XX L.H.	UNO
WELDS	1/4" FILLET	UNO
OPEN HOLES	13/16" UNO	FINISH PER SPECS
BOLTS	3/4" A325N	UNO
PAINT	1 S/C STD PRIMER U.N.O.	UNO

PROJECT NAME
OLDE ORCHARD ELEMENTARY SCHOOL
LOCATION
800 McNAUGHTEN RD. COLUMBUS, OHIO 43213
CONTRACTOR
THOMAS AND MARKER CONSTRUCTION
ARCHITECT
BRAUN & STEIDL

North Central Fabrication, Ltd.
NORTH CENTRAL FABRICATION
Mansfield, OH 44906
419-529-2744 FAX 419-529-5387 http://www.northcentralfab
AISC CERTIFIED FABRICATOR

DESCRIPTION	DATE	DATE	JOB No.
BEAM	05/14/2011		70234
	DRAWN BY TMc	CHECKED BY TAN	DRG No. B47

PHASE				
1	2	3	4	5
1	0	0	0	0

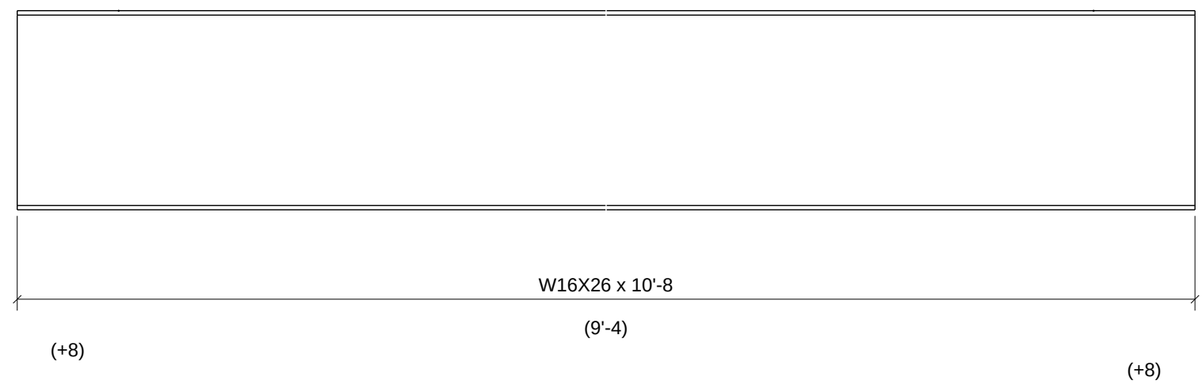

PROCESS CONTROL
PROCESS BY
FAB: _____
FIT AND WELD: _____
INSPECTION: _____
OTHER (IF NEEDED)
_____ : _____
_____ : _____
_____ : _____
_____ : _____
_____ : _____
REFERENCE LATEST ERECTION DRAWINGS FOR MATERIAL & FABRICATION INFORMATION

ONE - BEAM - B49

W	15 11/16" x 1/4"
F	5 1/2" x 3/8"

DATE	NO.	DESCRIPTION	BY
5/28/11	B	For Checking	TMc
5/16/11	A	For Approval	TMc

BILL OF MATERIAL

Qty Ea.	Qty Tot	Piece Mark	Description	Length	Weight Total	Remarks	Adv Mill #	Steel Grade
	1	B49	BEAM					
	1		W16X26	10'-8"	279	SQ-2		A992

STEEL ASTM	A992		UNO
ELECTRODES	E70XX L.H.		UNO
WELDS	1/4" FILLET		UNO
OPEN HOLES	13/16"	UNO	FINISH PER SPECS
BOLTS	3/4" A325N		UNO
PAINT	1 S/C STD PRIMER U.N.O.		UNO

PROJECT NAME
OLDE ORCHARD ELEMENTARY SCHOOL

LOCATION
800 McNAUGHTEN RD. COLUMBUS, OHIO 43213

CONTRACTOR
THOMAS AND MARKER CONSTRUCTION

ARCHITECT
BRAUN & STEIDL

North Central Fabrication, Ltd.

NORTH CENTRAL FABRICATION
Mansfield, OH 44906
419-529-2744 FAX 419-529-5387 http://www.northcentralfab

AISC CERTIFIED FABRICATOR

DESCRIPTION	DATE	DATE	JOB No.
BEAM	05/18/2011		70234
	DRAWN BY TMc	CHECKED BY TAN	DRG No. B49

PHASE				
1	2	3	4	5
1	0	0	0	0

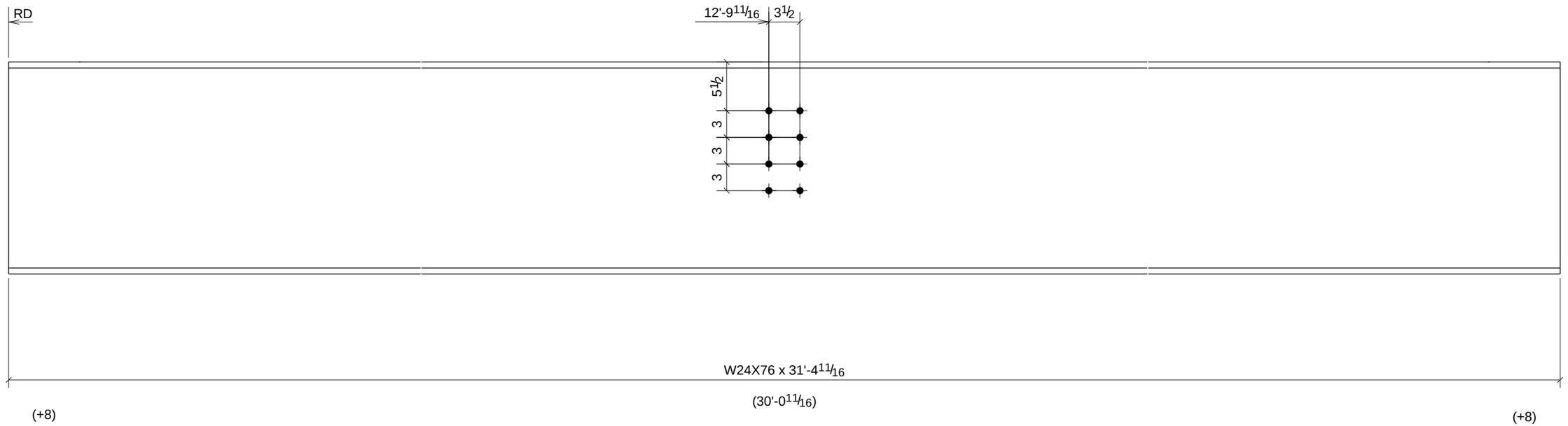

PROCESS CONTROL
PROCESS BY
FAB: _____
FIT AND WELD: _____
INSPECTION: _____
OTHER (IF NEEDED) _____
_____ : _____
_____ : _____
_____ : _____
_____ : _____
_____ : _____
REFERENCE LATEST ERECTION DRAWINGS FOR MATERIAL & FABRICATION INFORMATION

ONE - BEAM - B52

W	23 7/8" x 7/16"
F	9" x 11/16"

DATE	NO.	DESCRIPTION	BY
5/28/11	B	For Checking	TMc
5/16/11	A	For Approval	TMc

BILL OF MATERIAL

Qty Ea.	Qty Tot	Piece Mark	Description	Length	Weight Total	Remarks	Adv Mill #	Steel Grade
	1	B52	BEAM					
	1		W24X76	31'-4 11/16"	2393	SQ-2		A992

STEEL ASTM	A992	UNO
ELECTRODES	E70XX L.H.	UNO
WELDS	1/4" FILLET	UNO
OPEN HOLES	13/16" UNO	FINISH PER SPECS
BOLTS	3/4" A325N	UNO
PAINT	1 S/C STD PRIMER U.N.O.	UNO

PROJECT NAME
OLDE ORCHARD ELEMENTARY SCHOOL

LOCATION
800 McNAUGHTEN RD. COLUMBUS, OHIO 43213

CONTRACTOR
THOMAS AND MARKER CONSTRUCTION

ARCHITECT
BRAUN & STEIDL

North Central Fabrication, Ltd.
NORTH CENTRAL FABRICATION
Mansfield, OH 44906
419-529-2744 FAX 419-529-5387 http://www.northcentralfab
AISC CERTIFIED FABRICATOR

DESCRIPTION	DATE	DATE	JOB No.
BEAM	05/18/2011		70234
	DRAWN BY TMc	CHECKED BY TAN	DRG No. B52

PHASE				
1	2	3	4	5
1	0	0	0	0

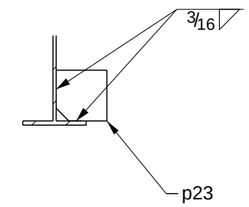

A - A

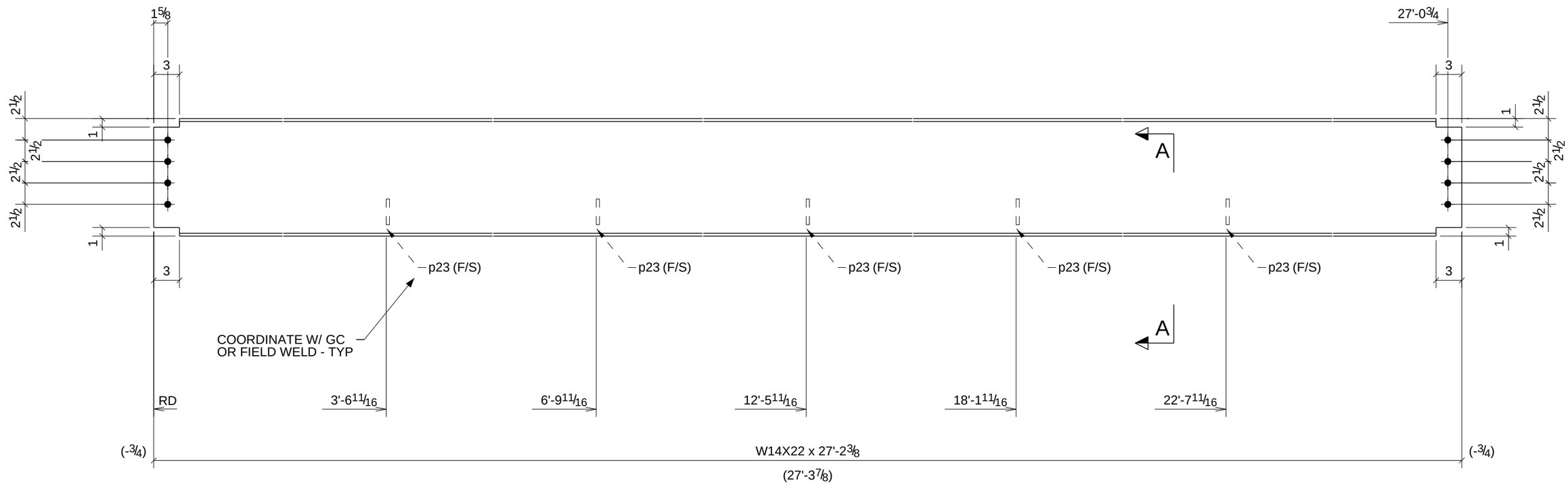

ONE - BEAM - B54

W	13 11/16" x 1/4"
F	5" x 5/16"

PROCESS CONTROL
PROCESS BY
FAB: _____
FIT AND WELD: _____
INSPECTION: _____
OTHER (IF NEEDED) _____
_____ : _____
_____ : _____
_____ : _____
_____ : _____
REFERENCE LATEST ERECTION DRAWINGS FOR MATERIAL & FABRICATION INFORMATION

DATE	NO.	DESCRIPTION	BY
5/28/11	B	For Checking	TMc
5/16/11	A	For Approval	TMc

BILL OF MATERIAL

Qty Ea.	Qty Tot	Piece Mark	Description	Length	Weight Total	Remarks	Adv Mill #	Steel Grade
	1	B54	BEAM					
	1		W14X22	27'-2 3/8"	601	SQ-2		A992
	5	p23	BAR3/8"X4"	0'-4"	8			A36

STEEL ASTM	A992	UNO
ELECTRODES	E70XX L.H.	UNO
WELDS	1/4" FILLET	UNO
OPEN HOLES	13/16" UNO	FINISH PER SPECS
BOLTS	3/4" A325N	UNO
PAINT	1 S/C STD PRIMER U.N.O.	UNO

PROJECT NAME
OLDE ORCHARD ELEMENTARY SCHOOL
LOCATION
800 McNAUGHTEN RD. COLUMBUS, OHIO 43213
CONTRACTOR
THOMAS AND MARKER CONSTRUCTION
ARCHITECT
BRAUN & STEIDL

North Central Fabrication, Ltd.
NORTH CENTRAL FABRICATION
Mansfield, OH 44906
419-529-2744 FAX 419-529-5387 http://www.northcentralfab
AISC CERTIFIED FABRICATOR

DESCRIPTION	DATE	DATE	JOB No.
BEAM	05/14/2011		70234
	DRAWN BY TMc	CHECKED BY TAN	DRG No. B54

PHASE				
1	2	3	4	5
1	0	0	0	0

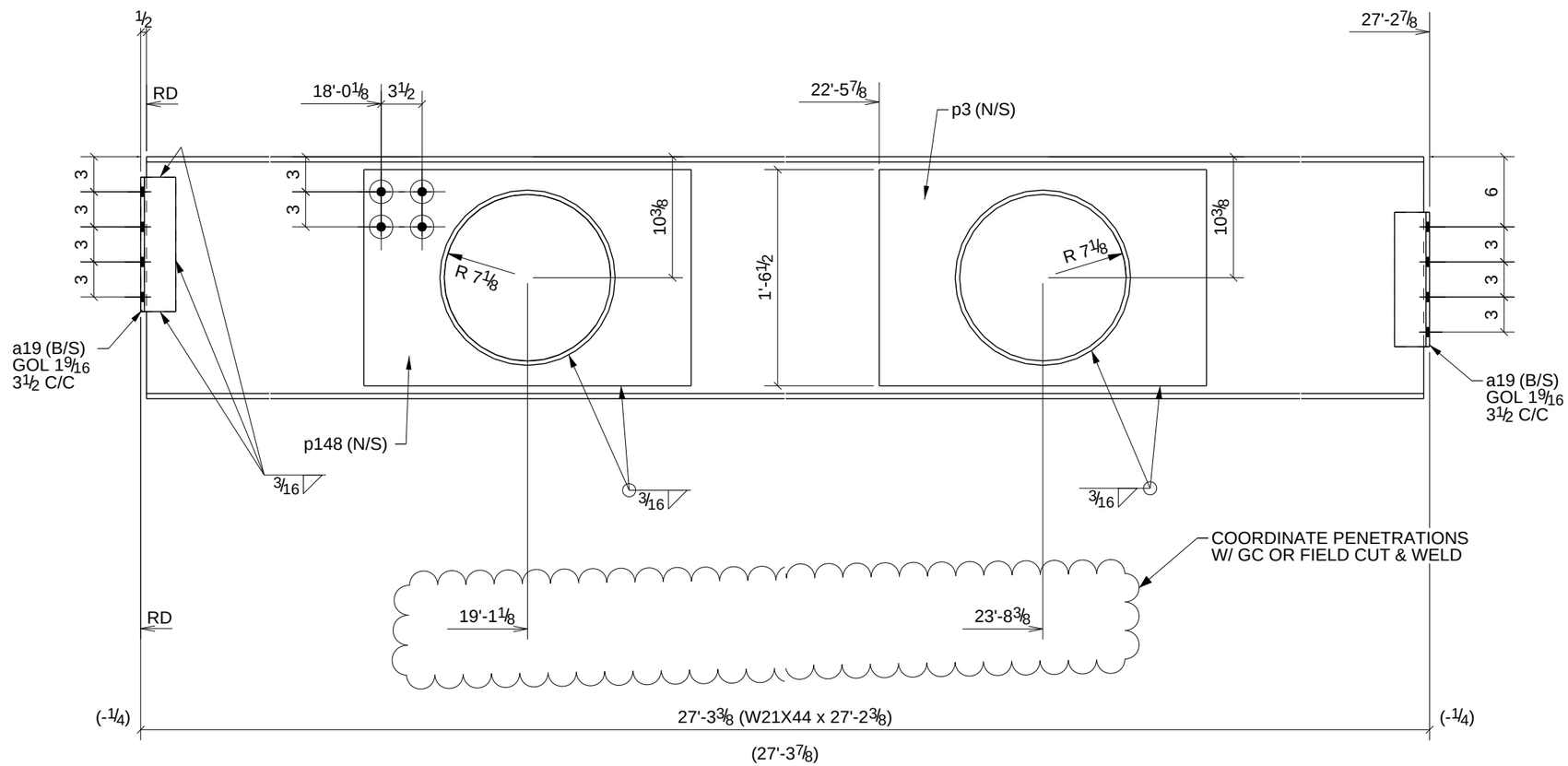

PROCESS CONTROL
PROCESS BY
FAB: _____
FIT AND WELD: _____
INSPECTION: _____
OTHER (IF NEEDED) _____
_____ : _____
_____ : _____
_____ : _____
_____ : _____
REFERENCE LATEST ERECTION DRAWINGS FOR MATERIAL & FABRICATION INFORMATION

ONE - BEAM - B55

W	20 11/16" x 3/8"
F	6 1/2" x 7/16"

BILL OF MATERIAL

Qty Ea.	Qty Tot	Piece Mark	Description	Length	Weight Total	Remarks	Adv Mill #	Steel Grade
	1	B55	BEAM					
	1		W21X44	27'-2 3/8"	1203	SQ-2		A992
	4	a19	L3X3X5/16	0'-11 1/2"	23			A36
	1	p3	PL1/2"X18 1/2"	2'-4"	49			A36
	1	p148	PL1/2"X18 1/2"	2'-4"	49			A36

STEEL ASTM	A992		UNO
ELECTRODES	E70XX L.H.		UNO
WELDS	1/4" FILLET		UNO
OPEN HOLES	13/16"	UNO	FINISH PER SPECS
BOLTS	3/4" A325N		UNO
PAINT	1 S/C STD PRIMER U.N.O.		UNO

PROJECT NAME
OLDE ORCHARD ELEMENTARY SCHOOL
LOCATION
800 McNAUGHTEN RD. COLUMBUS, OHIO 43213
CONTRACTOR
THOMAS AND MARKER CONSTRUCTION
ARCHITECT
BRAUN & STEIDL

DATE	NO.	DESCRIPTION	BY
5/28/11	B	For Checking	TMc
5/16/11	A	For Approval	TMc

North Central Fabrication, Ltd.

NORTH CENTRAL FABRICATION
Mansfield, OH 44906
419-529-2744 FAX 419-529-5387 http://www.northcentralfab

AISC CERTIFIED FABRICATOR

DESCRIPTION	DATE	DATE	JOB No.
BEAM	05/14/2011		70234
	DRAWN BY TMc	CHECKED BY TAN	DRG No. B55

PHASE				
1	2	3	4	5
1	0	0	0	0

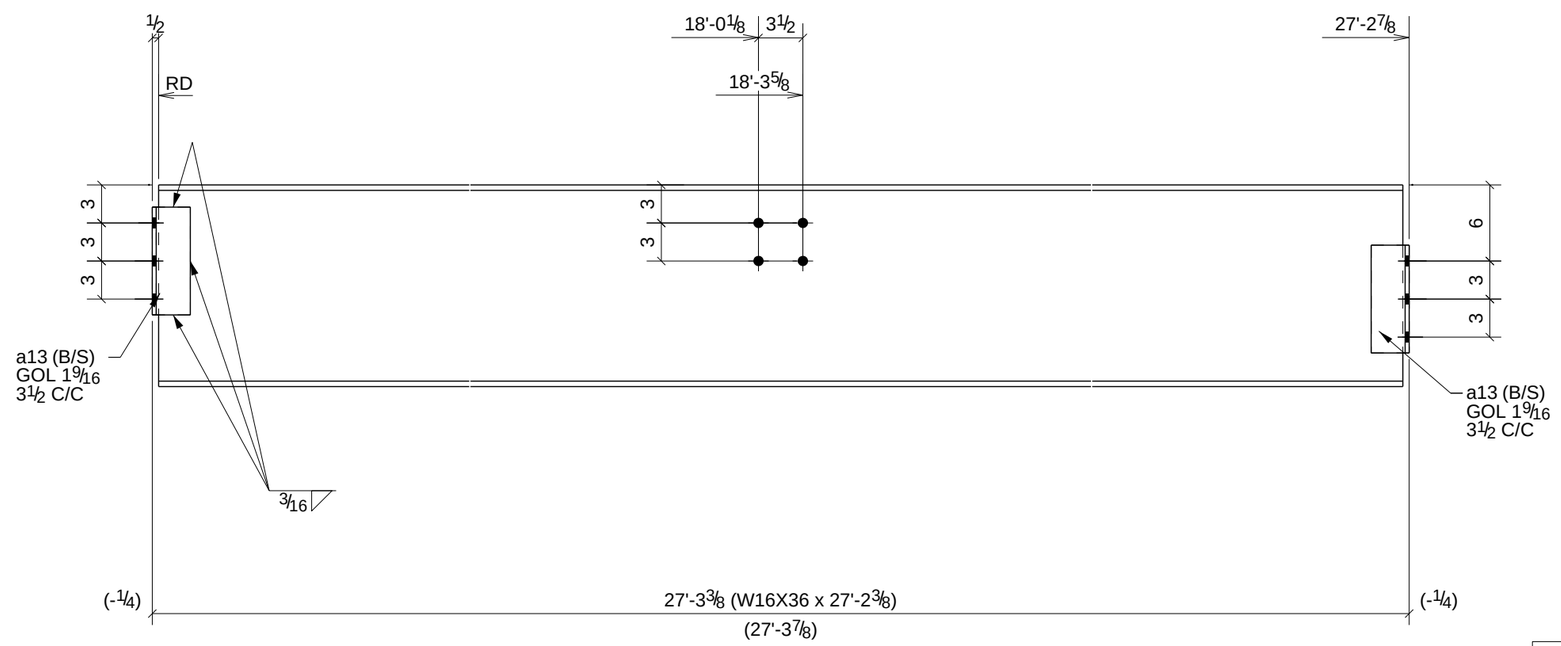

PROCESS CONTROL
PROCESS BY
FAB: _____
FIT AND WELD: _____
INSPECTION: _____
OTHER (IF NEEDED) _____
_____ : _____
_____ : _____
_____ : _____
_____ : _____
REFERENCE LATEST ERECTION DRAWINGS FOR MATERIAL & FABRICATION INFORMATION

ONE - BEAM - B56

W	15 7/8" x 1/4"
F	7" x 7/16"

DATE	NO.	DESCRIPTION	BY
5/28/11	B	For Checking	TMc
5/16/11	A	For Approval	TMc

BILL OF MATERIAL

Qty Ea.	Qty Tot	Piece Mark	Description	Length	Weight Total	Remarks	Adv Mill #	Steel Grade
	1	B56	BEAM					
	1		W16X36	27'-2 3/8"	981	SQ-2		A992
	4	a13	L3X3X5/16	0'-8 1/2"	17			A36

STEEL ASTM	A992	UNO
ELECTRODES	E70XX L.H.	UNO
WELDS	1/4" FILLET	UNO
OPEN HOLES	13/16" UNO	FINISH PER SPECS
BOLTS	3/4" A325N	UNO
PAINT	1 S/C STD PRIMER U.N.O.	UNO

PROJECT NAME
OLDE ORCHARD ELEMENTARY SCHOOL

LOCATION
800 McNAUGHTEN RD. COLUMBUS, OHIO 43213

CONTRACTOR
THOMAS AND MARKER CONSTRUCTION

ARCHITECT
BRAUN & STEIDL

North Central Fabrication, Ltd.
NORTH CENTRAL FABRICATION
Mansfield, OH 44906
419-529-2744 FAX 419-529-5387 http://www.northcentralfab
AISC CERTIFIED FABRICATOR

DESCRIPTION	DATE	DATE	JOB No.
BEAM	05/14/2011		70234
	DRAWN BY TMc	CHECKED BY TAN	DRG No. B56

PHASE				
1	2	3	4	5
1	0	0	0	0

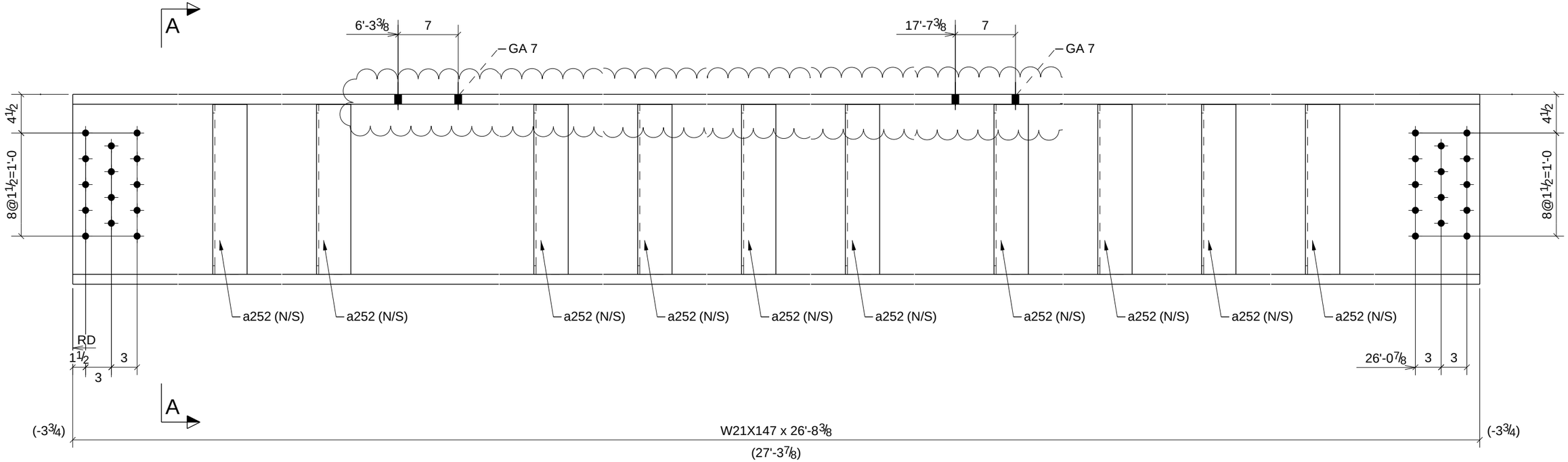

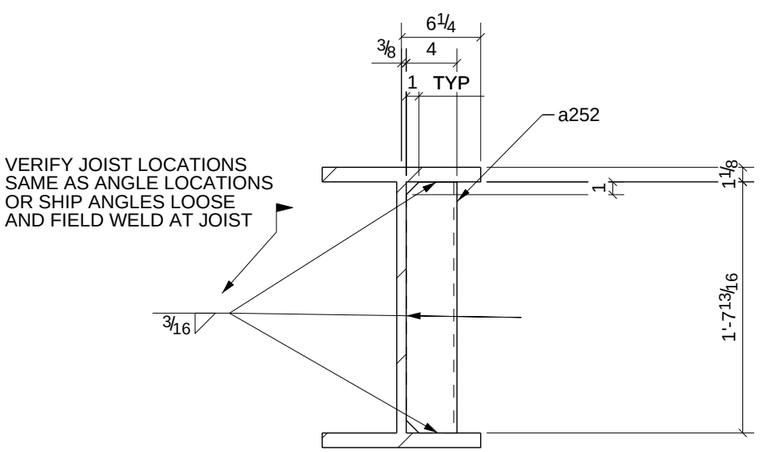

A - A

ONE - BEAM - B57

W	22 1/8" x 3/4"
F	12 1/2" x 1 1/8"

PROCESS CONTROL
PROCESS BY
FAB: _____
FIT AND WELD: _____
INSPECTION: _____
OTHER (IF NEEDED) _____
REFERENCE LATEST ERECTION DRAWINGS FOR MATERIAL & FABRICATION INFORMATION

DATE	NO.	DESCRIPTION	BY
5/28/11	B	For Checking	TMc
5/16/11	A	For Approval	TMc

BILL OF MATERIAL

Qty Ea.	Qty Tot	Piece Mark	Description	Length	Weight Total	Remarks	Adv Mill #	Steel Grade
	1	B57	BEAM					
	1		W21X147	26'-8 3/8"	3925	SQ-2		A992
	10	a252	L4X4X1/4	1'-7 13/16"	109			A36

STEEL ASTM	A992	UNO
ELECTRODES	E70XX L.H.	UNO
WELDS	1/4" FILLET	UNO
OPEN HOLES	13/16" UNO	FINISH PER SPECS
BOLTS	3/4" A325N	UNO
PAINT	1 S/C STD PRIMER U.N.O.	UNO

PROJECT NAME
OLDE ORCHARD ELEMENTARY SCHOOL
LOCATION
800 McNAUGHTEN RD. COLUMBUS, OHIO 43213
CONTRACTOR
THOMAS AND MARKER CONSTRUCTION
ARCHITECT
BRAUN & STEIDL

North Central Fabrication, Ltd.
NORTH CENTRAL FABRICATION
Mansfield, OH 44906
419-529-2744 FAX 419-529-5387 http://www.northcentralfab
AISC CERTIFIED FABRICATOR

DESCRIPTION	DATE	DATE	JOB No.
BEAM	05/14/2011		70234
	DRAWN BY TMc	CHECKED BY TAN	DRG No. B57

PHASE				
1	2	3	4	5
1	0	0	0	0

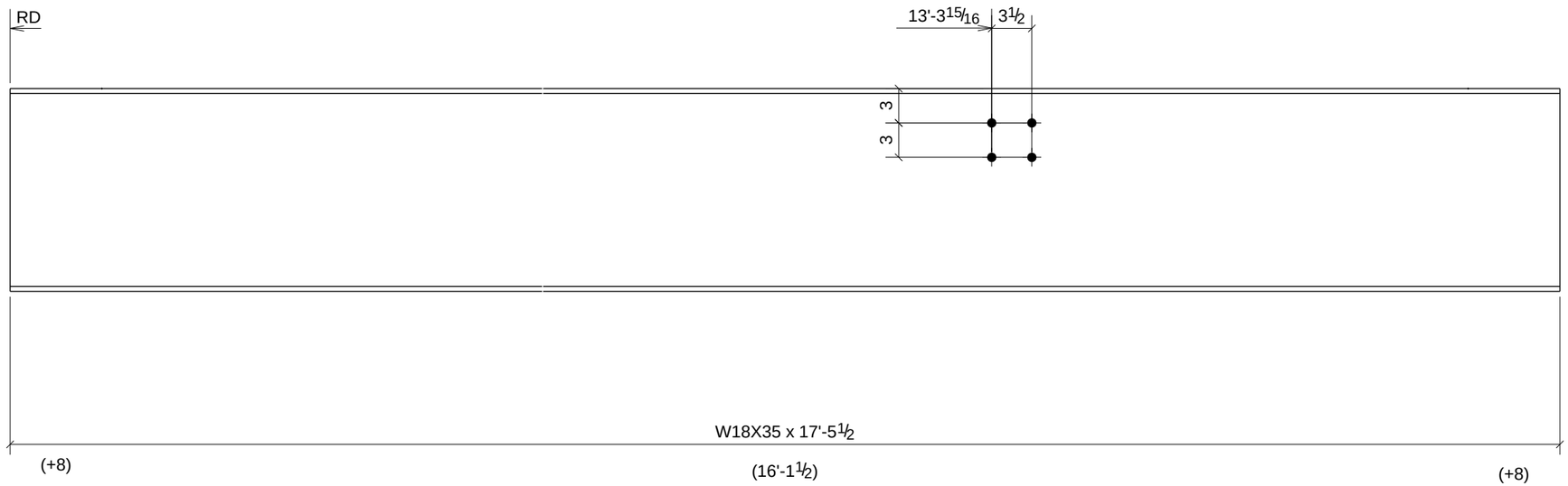

PROCESS CONTROL
PROCESS BY
FAB: _____
FIT AND WELD: _____
INSPECTION: _____
OTHER (IF NEEDED) _____
_____ : _____
_____ : _____
_____ : _____
_____ : _____
REFERENCE LATEST ERECTION DRAWINGS FOR MATERIAL & FABRICATION INFORMATION

ONE - BEAM - B58

W	17 11/16" x 1/4"
F	6" x 7/16"

DATE	NO.	DESCRIPTION	BY
5/28/11	B	For Checking	TMc
5/16/11	A	For Approval	TMc

BILL OF MATERIAL

Qty Ea.	Qty Tot	Piece Mark	Description	Length	Weight Total	Remarks	Adv Mill #	Steel Grade
	1	B58	BEAM					
	1		W18X35	17'-5 1/2"	612	SQ-2		A992

STEEL ASTM	A992	UNO
ELECTRODES	E70XX L.H.	UNO
WELDS	1/4" FILLET	UNO
OPEN HOLES	13/16" UNO	FINISH PER SPECS
BOLTS	3/4" A325N	UNO
PAINT	1 S/C STD PRIMER U.N.O.	UNO

PROJECT NAME
OLDE ORCHARD ELEMENTARY SCHOOL

LOCATION
800 McNAUGHTEN RD. COLUMBUS, OHIO 43213

CONTRACTOR
THOMAS AND MARKER CONSTRUCTION

ARCHITECT
BRAUN & STEIDL

North Central Fabrication, Ltd.
NORTH CENTRAL FABRICATION
Mansfield, OH 44906
419-529-2744 FAX 419-529-5387 http://www.northcentralfab
AISC CERTIFIED FABRICATOR

DESCRIPTION	DATE	DATE	JOB No.
BEAM	05/18/2011		70234
	DRAWN BY TMc	CHECKED BY TAN	DRG No. B58

PHASE				
1	2	3	4	5
1	0	0	0	0

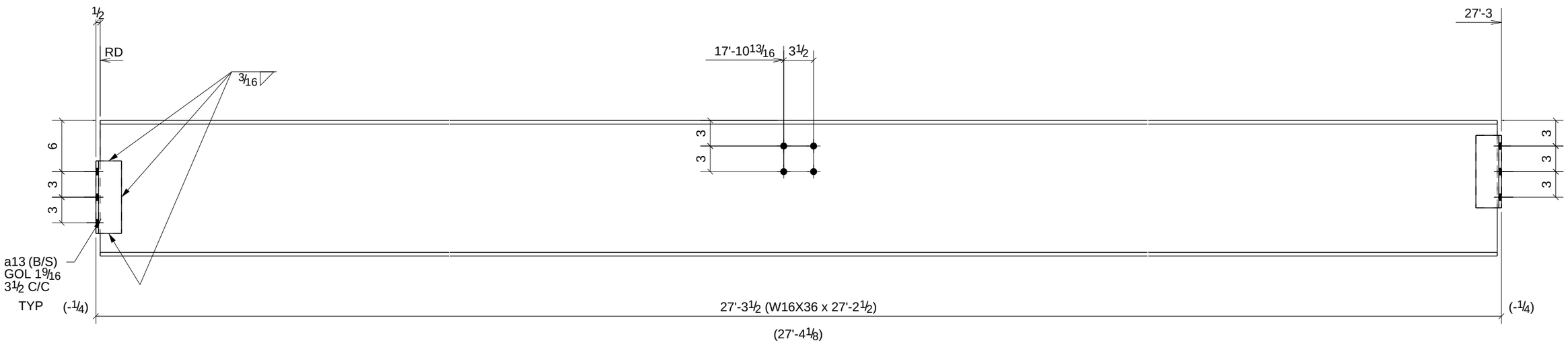

PROCESS CONTROL
PROCESS BY
FAB: _____
FIT AND WELD: _____
INSPECTION: _____
OTHER (IF NEEDED)
_____ : _____
_____ : _____
_____ : _____
_____ : _____
_____ : _____
REFERENCE LATEST ERECTION DRAWINGS FOR MATERIAL & FABRICATION INFORMATION

ONE - BEAM - B59

W	15 7/8" x 1/4"
F	7" x 7/16"

DATE	NO.	DESCRIPTION	BY
5/28/11	B	For Checking	TMc
5/16/11	A	For Approval	TMc

BILL OF MATERIAL

Qty Ea.	Qty Tot	Piece Mark	Description	Length	Weight Total	Remarks	Adv Mill #	Steel Grade
	1	B59	BEAM					
	1		W16X36	27'-2 1/2"	982	SQ-2		A992
	4	a13	L3X3X5/16	0'-8 1/2"	17			A36

STEEL ASTM	A992	UNO
ELECTRODES	E70XX L.H.	UNO
WELDS	1/4" FILLET	UNO
OPEN HOLES	13/16" UNO	FINISH PER SPECS
BOLTS	3/4" A325N	UNO
PAINT	1 S/C STD PRIMER U.N.O.	UNO

PROJECT NAME
OLDE ORCHARD ELEMENTARY SCHOOL

LOCATION
800 McNAUGHTEN RD. COLUMBUS, OHIO 43213

CONTRACTOR
THOMAS AND MARKER CONSTRUCTION

ARCHITECT
BRAUN & STEIDL

North Central Fabrication, Ltd.
NORTH CENTRAL FABRICATION
Mansfield, OH 44906
419-529-2744 FAX 419-529-5387 http://www.northcentralfab
AISC CERTIFIED FABRICATOR

DESCRIPTION	DATE		JOB No.
BEAM	05/18/2011	DATE	70234
	DRAWN BY TMc	CHECKED BY TAN	DRG No. B59

PHASE				
1	2	3	4	5
2	0	0	0	0

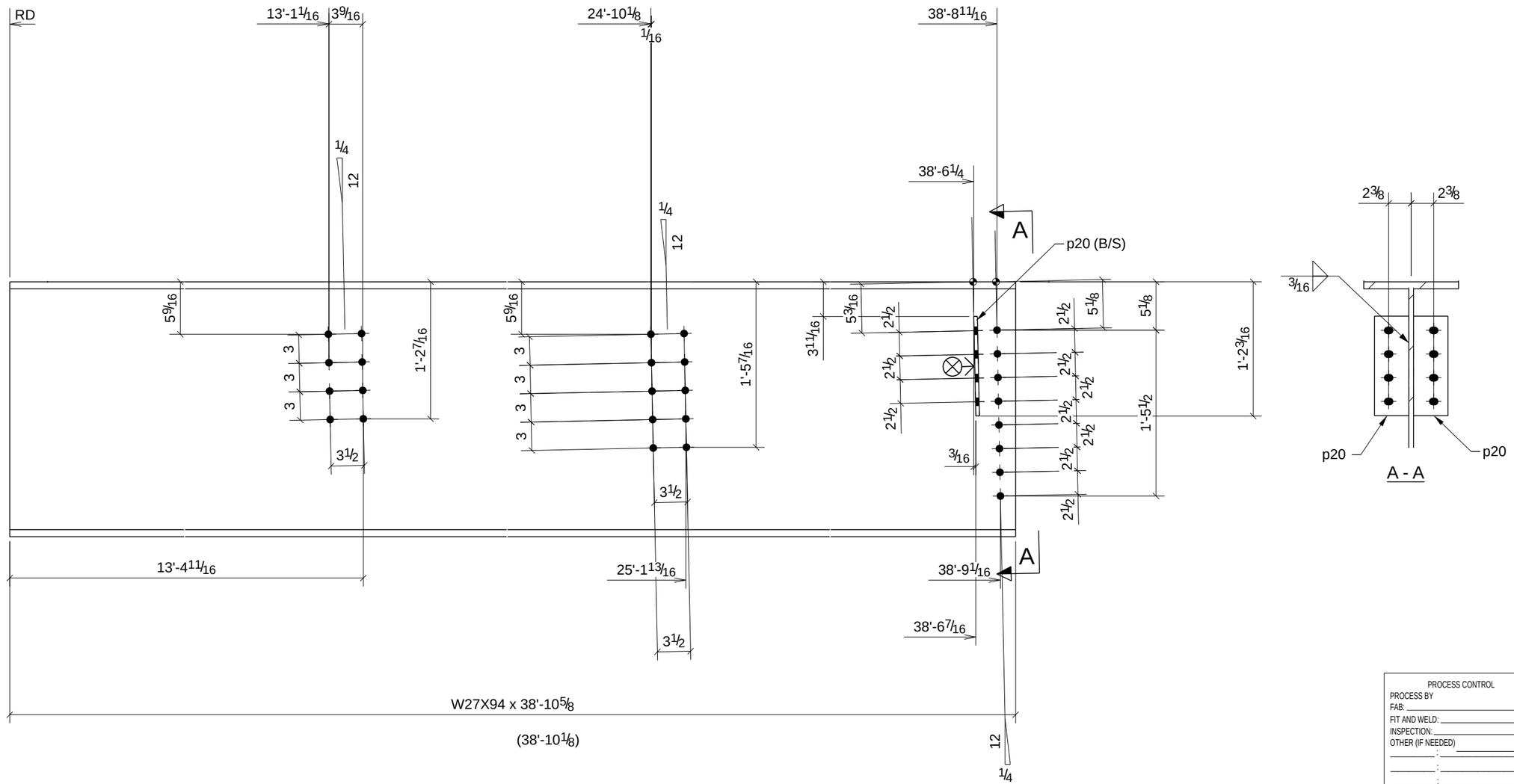

PROCESS CONTROL
PROCESS BY
FAB: _____
FIT AND WELD: _____
INSPECTION: _____
OTHER (IF NEEDED)
_____ : _____
_____ : _____
_____ : _____
_____ : _____
_____ : _____
REFERENCE LATEST ERECTION DRAWINGS FOR MATERIAL & FABRICATION INFORMATION

2 - BEAMS - B61

W	26 7/8" x 1/2"
F	10" x 3/4"

DATE	NO.	DESCRIPTION	BY
5/28/11	B	For Checking	TMc
5/16/11	A	For Approval	TMc

BILL OF MATERIAL

Qty Ea.	Qty Tot	Piece Mark	Description	Length	Weight Total	Remarks	Adv Mill #	Steel Grade
	2	B61	BEAMS					
	2		W27X94	38'-10 5/8"	7332	SQ-2		A992
	4	p20	PL3/8"X3 5/8"	0'-10 1/2"	16			A36

STEEL ASTM	A992	UNO
ELECTRODES	E70XX L.H.	UNO
WELDS	1/4" FILLET	UNO
OPEN HOLES	13/16" UNO	FINISH PER SPECS
BOLTS	3/4" A325N	UNO
PAINT	1 S/C STD PRIMER U.N.O.	UNO

PROJECT NAME
OLDE ORCHARD ELEMENTARY SCHOOL

LOCATION
800 McNAUGHTEN RD. COLUMBUS, OHIO 43213

CONTRACTOR
THOMAS AND MARKER CONSTRUCTION

ARCHITECT
BRAUN & STEIDL

North Central Fabrication, Ltd.
NORTH CENTRAL FABRICATION
Mansfield, OH 44906
419-529-2744 FAX 419-529-5387 http://www.northcentralfab
AISC CERTIFIED FABRICATOR

DESCRIPTION	DATE	DATE	JOB No.
BEAM	05/14/2011		70234
	DRAWN BY TMc	CHECKED BY TAN	DRG No. B61

PHASE				
1	2	3	4	5
1	0	0	0	0

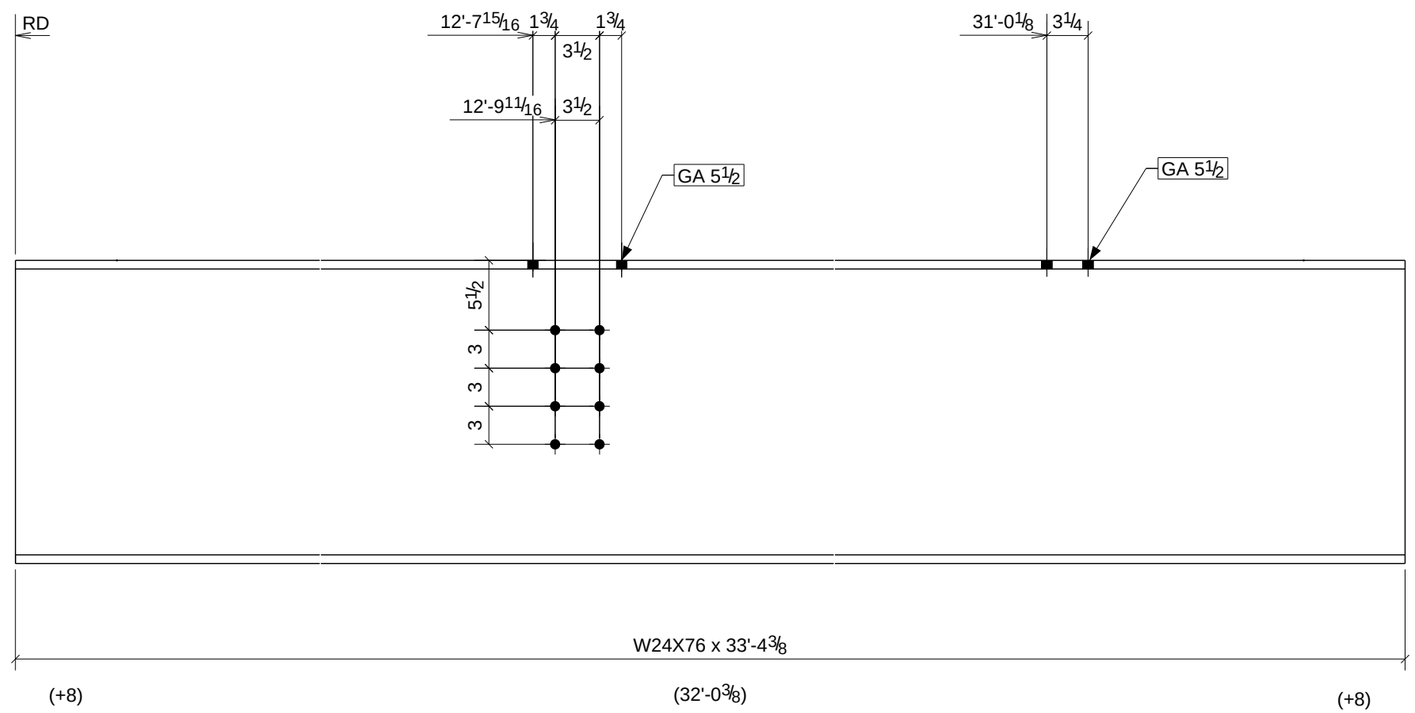

PROCESS CONTROL
PROCESS BY
FAB: _____
FIT AND WELD: _____
INSPECTION: _____
OTHER (IF NEEDED) _____
_____ : _____
_____ : _____
_____ : _____
_____ : _____
_____ : _____
REFERENCE LATEST ERECTION DRAWINGS FOR MATERIAL & FABRICATION INFORMATION

ONE - BEAM - B62

W	23 7/8" x 7/16"
F	9" x 11/16"

DATE	NO.	DESCRIPTION	BY
5/28/11	B	For Checking	TMc
5/16/11	A	For Approval	TMc

BILL OF MATERIAL

Qty Ea.	Qty Tot	Piece Mark	Description	Length	Weight Total	Remarks	Adv Mill #	Steel Grade
	1	B62	BEAM					
	1		W24X76	33'-4 3/8"	2544	SQ-2		A992

STEEL ASTM	A992	UNO
ELECTRODES	E70XX L.H.	UNO
WELDS	1/4" FILLET	UNO
OPEN HOLES	13/16" UNO	FINISH PER SPECS
BOLTS	3/4" A325N	UNO
PAINT	1 S/C STD PRIMER U.N.O.	UNO

PROJECT NAME
OLDE ORCHARD ELEMENTARY SCHOOL

LOCATION
800 McNAUGHTEN RD. COLUMBUS, OHIO 43213

CONTRACTOR
THOMAS AND MARKER CONSTRUCTION

ARCHITECT
BRAUN & STEIDL

North Central Fabrication, Ltd.
NORTH CENTRAL FABRICATION
Mansfield, OH 44906
419-529-2744 FAX 419-529-5387 http://www.northcentralfab
AISC CERTIFIED FABRICATOR

DESCRIPTION	DATE	DATE	JOB No.
BEAM	05/18/2011		70234
	DRAWN BY TMc	CHECKED BY TAN	DRG No. B62

PHASE				
1	2	3	4	5
1	0	0	0	0

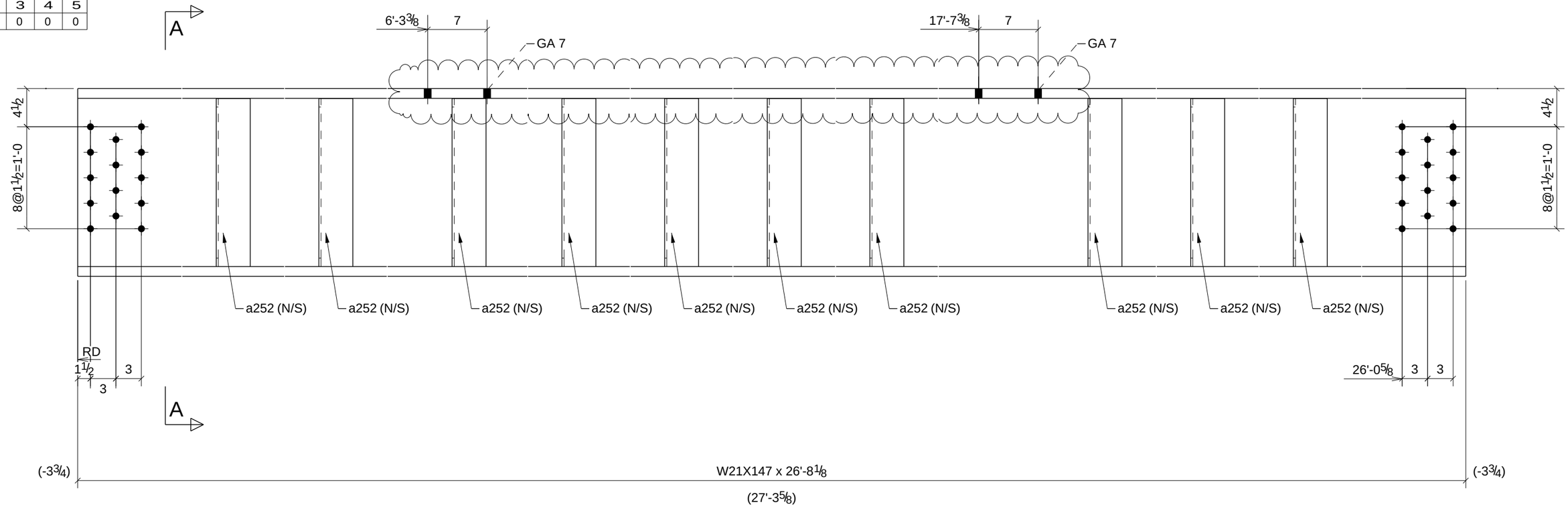

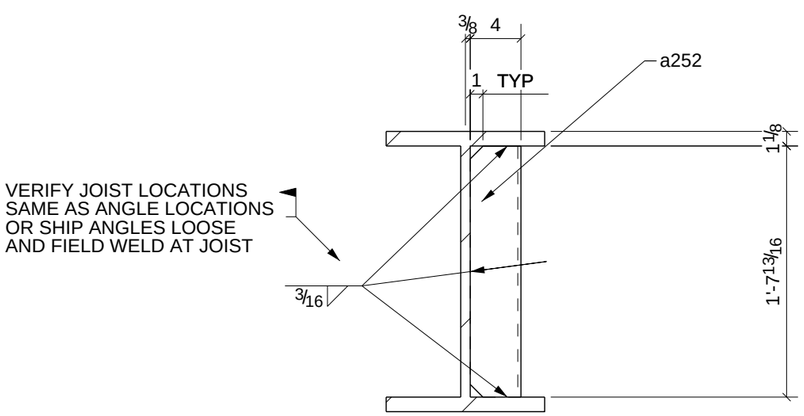

A - A

ONE - BEAM - B65

W	22 1/8" x 3/4"
F	12 1/2" x 1 1/8"

PROCESS CONTROL
PROCESS BY
FAB: _____
FIT AND WELD: _____
INSPECTION: _____
OTHER (IF NEEDED)
_____ : _____
_____ : _____
_____ : _____
_____ : _____
REFERENCE LATEST ERECTION DRAWINGS FOR MATERIAL & FABRICATION INFORMATION

DATE	NO.	DESCRIPTION	BY
5/28/11	B	For Checking	TMc
5/16/11	A	For Approval	TMc

BILL OF MATERIAL

Qty Ea.	Qty Tot	Piece Mark	Description	Length	Weight Total	Remarks	Adv Mill #	Steel Grade
	1	B65	BEAM					
	1		W21X147	26'-8 1/8"	3922	SQ-2		A992
	10	a252	L4X4X1/4	1'-7 13/16"	109			A36

STEEL ASTM	A992	UNO
ELECTRODES	E70XX L.H.	UNO
WELDS	1/4" FILLET	UNO
OPEN HOLES	13/16" UNO	FINISH PER SPECS
BOLTS	3/4" A325N	UNO
PAINT	1 S/C STD PRIMER U.N.O.	UNO

PROJECT NAME
OLDE ORCHARD ELEMENTARY SCHOOL
LOCATION
800 McNAUGHTEN RD. COLUMBUS, OHIO 43213
CONTRACTOR
THOMAS AND MARKER CONSTRUCTION
ARCHITECT
BRAUN & STEIDL

North Central Fabrication, Ltd.
NORTH CENTRAL FABRICATION
Mansfield, OH 44906
419-529-2744 FAX 419-529-5387 http://www.northcentralfab
AISC CERTIFIED FABRICATOR

DESCRIPTION	DATE	DATE	JOB No.
BEAM	05/14/2011		70234
	DRAWN BY TMc	CHECKED BY TAN	DRG No. B65

PHASE				
1	2	3	4	5
2	0	0	0	0

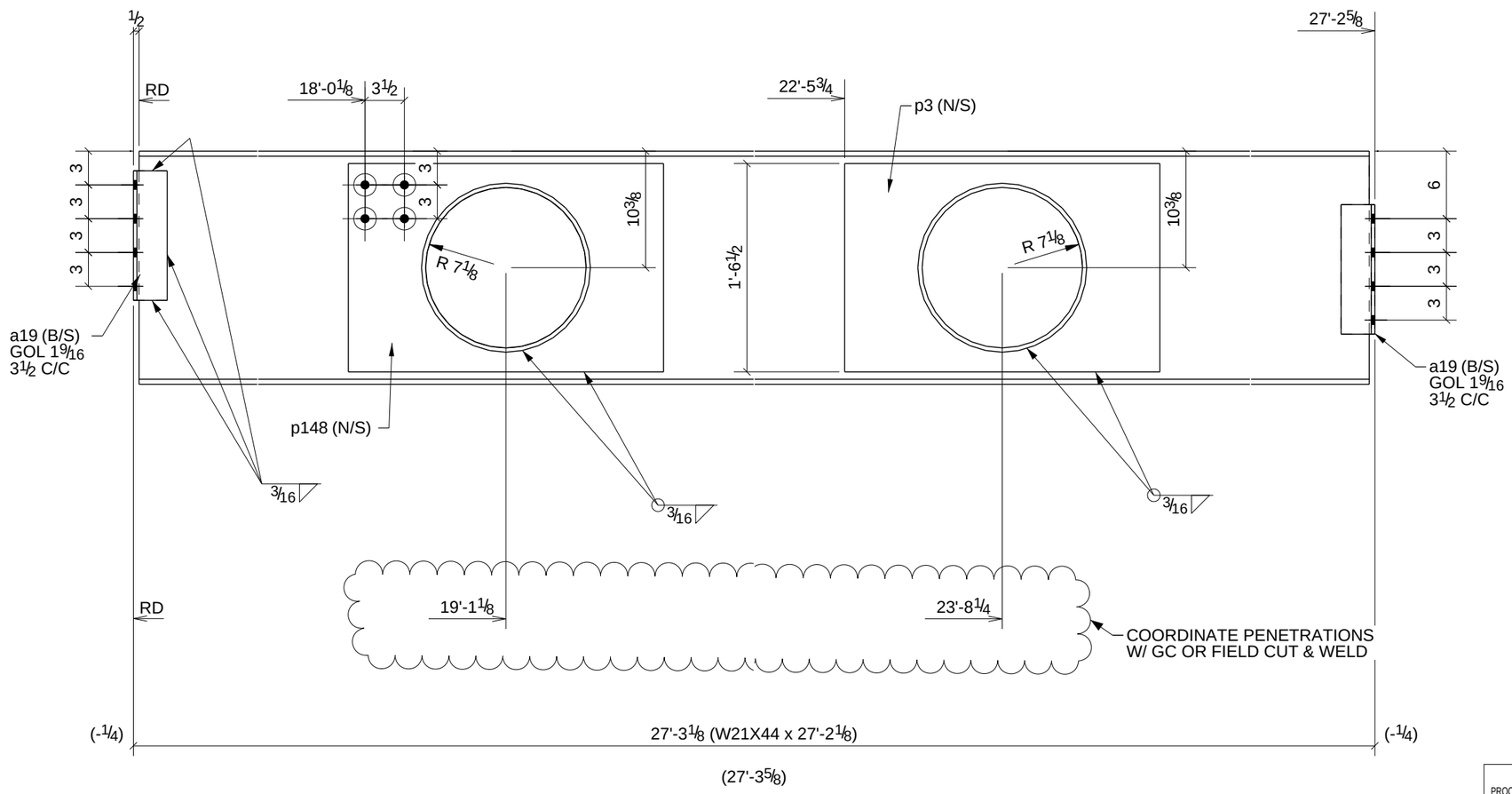

PROCESS CONTROL	
PROCESS BY	
FAB:	
FIT AND WELD:	
INSPECTION:	
OTHER (IF NEEDED)	
	:
	:
	:
	:
	:

REFERENCE LATEST ERECTION DRAWINGS FOR MATERIAL & FABRICATION INFORMATION

2 - BEAMS - B66

W	20 11/16" x 3/8"
F	6 1/2" x 7/16"

BILL OF MATERIAL

Qty Ea.	Qty Tot	Piece Mark	Description	Length	Weight Total	Remarks	Adv Mill #	Steel Grade
	2	B66	BEAMS					
	2		W21X44	27'-2 1/8"	2405	SQ-2		A992
	8	a19	L3X3X5/16	0'-11 1/2"	46			A36
	2	p3	PL1/2"X18 1/2"	2'-4"	97			A36
	2	p148	PL1/2"X18 1/2"	2'-4"	97			A36

STEEL ASTM	A992		UNO
ELECTRODES	E70XX L.H.		UNO
WELDS	1/4" FILLET		UNO
OPEN HOLES	13/16"	UNO	FINISH PER SPECS
BOLTS	3/4" A325N		UNO
PAINT	1 S/C STD PRIMER U.N.O.		UNO

PROJECT NAME
OLDE ORCHARD ELEMENTARY SCHOOL

LOCATION
800 McNAUGHTEN RD. COLUMBUS, OHIO 43213

CONTRACTOR
THOMAS AND MARKER CONSTRUCTION

ARCHITECT
BRAUN & STEIDL

DATE	NO.	DESCRIPTION	BY
5/28/11	B	For Checking	TMc
5/16/11	A	For Approval	TMc

North Central Fabrication, Ltd.
NORTH CENTRAL FABRICATION
Mansfield, OH 44906
419-529-2744 FAX 419-529-5387 http://www.northcentralfab
AISC CERTIFIED FABRICATOR

DESCRIPTION	DATE	DATE	JOB No.
BEAM	05/14/2011		70234
	DRAWN BY TMc	CHECKED BY TAN	DRG No. B66

PHASE				
1	2	3	4	5
2	0	0	0	0

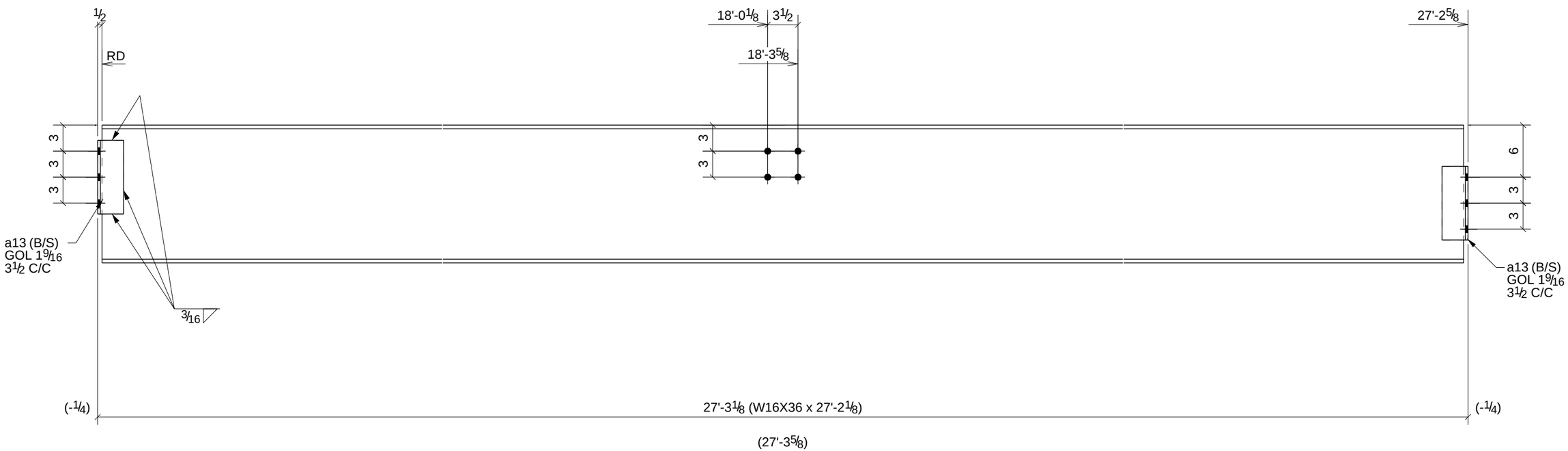

PROCESS CONTROL
PROCESS BY
FAB: _____
FIT AND WELD: _____
INSPECTION: _____
OTHER (IF NEEDED) _____
_____ : _____
_____ : _____
_____ : _____
_____ : _____
_____ : _____
REFERENCE LATEST ERECTION DRAWINGS FOR MATERIAL & FABRICATION INFORMATION

2 - BEAMS - B67

W	15 7/8" x 1/4"
F	7" x 7/16"

DATE	NO.	DESCRIPTION	BY
5/28/11	B	For Checking	TMc
5/16/11	A	For Approval	TMc

BILL OF MATERIAL

Qty Ea.	Qty Tot	Piece Mark	Description	Length	Weight Total	Remarks	Adv Mill #	Steel Grade
	2	B67	BEAMS					
	2		W16X36	27'-2 1/8"	1961	SQ-2		A992
	8	a13	L3X3X5/16	0'-8 1/2"	34			A36

STEEL ASTM	A992	UNO
ELECTRODES	E70XX L.H.	UNO
WELDS	1/4" FILLET	UNO
OPEN HOLES	13/16" UNO	FINISH PER SPECS
BOLTS	3/4" A325N	UNO
PAINT	1 S/C STD PRIMER U.N.O.	UNO

PROJECT NAME
OLDE ORCHARD ELEMENTARY SCHOOL

LOCATION
800 McNAUGHTEN RD. COLUMBUS, OHIO 43213

CONTRACTOR
THOMAS AND MARKER CONSTRUCTION

ARCHITECT
BRAUN & STEIDL

North Central Fabrication, Ltd.
NORTH CENTRAL FABRICATION
Mansfield, OH 44906
419-529-2744 FAX 419-529-5387 http://www.northcentralfab
AISC CERTIFIED FABRICATOR

DESCRIPTION	DATE	DATE	JOB No.
BEAM	05/14/2011		70234
	DRAWN BY TMc	CHECKED BY TAN	DRG No. B67

PHASE				
1	2	3	4	5
1	0	0	0	0

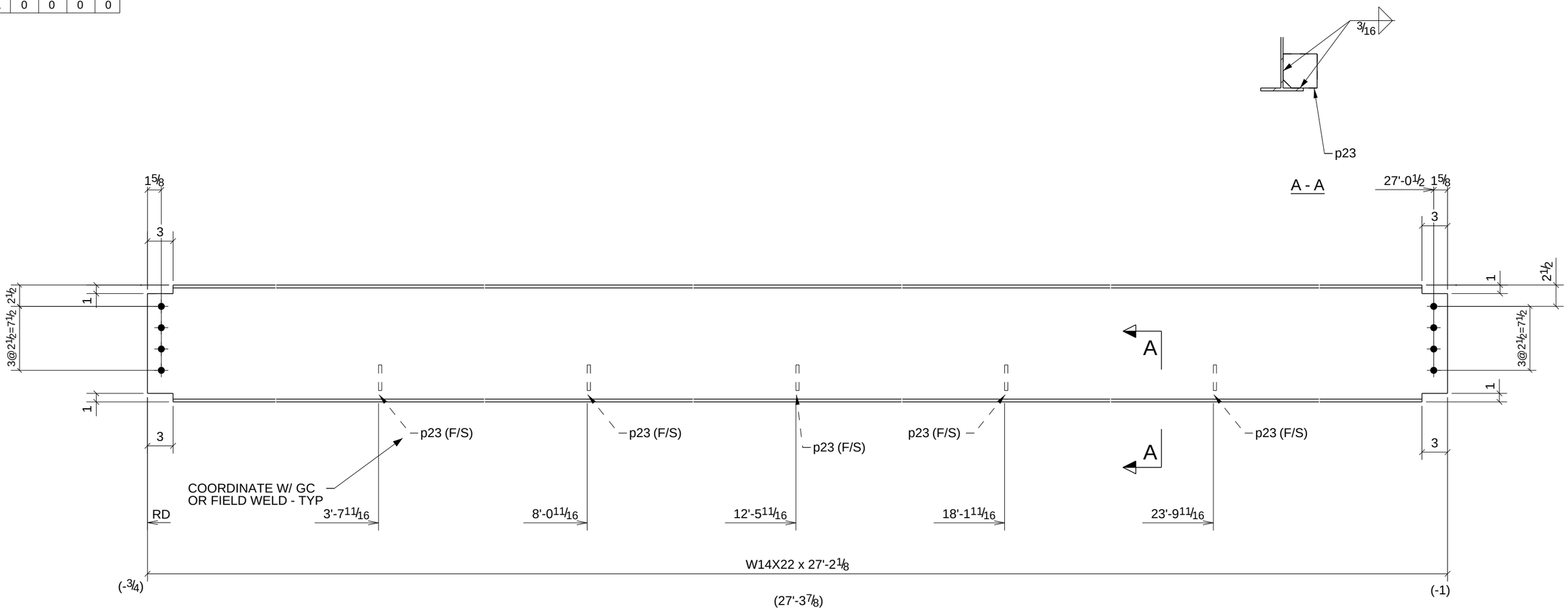

PROCESS CONTROL
PROCESS BY
FAB: _____
FIT AND WELD: _____
INSPECTION: _____
OTHER (IF NEEDED)
_____ : _____
_____ : _____
_____ : _____
_____ : _____
_____ : _____
REFERENCE LATEST ERECTION DRAWINGS FOR MATERIAL & FABRICATION INFORMATION

ONE - BEAM - B68

W	13 11/16" x 1/4"
F	5" x 5/16"

DATE	NO.	DESCRIPTION	BY
5/28/11	B	For Checking	TMc
5/16/11	A	For Approval	TMc

BILL OF MATERIAL

Qty Ea.	Qty Tot	Piece Mark	Description	Length	Weight Total	Remarks	Adv Mill #	Steel Grade
	1	B68	BEAM					
	1		W14X22	27'-2 1/8"	600	SQ-2		A992
	5	p23	BAR3/8"X4"	0'-4"	8			A36

STEEL ASTM	A992	UNO
ELECTRODES	E70XX L.H.	UNO
WELDS	1/4" FILLET	UNO
OPEN HOLES	13/16" UNO	FINISH PER SPECS
BOLTS	3/4" A325N	UNO
PAINT	1 S/C STD PRIMER U.N.O.	UNO

PROJECT NAME
OLDE ORCHARD ELEMENTARY SCHOOL

LOCATION
800 McNAUGHTEN RD. COLUMBUS, OHIO 43213

CONTRACTOR
THOMAS AND MARKER CONSTRUCTION

ARCHITECT
BRAUN & STEIDL

North Central Fabrication, Ltd.
NORTH CENTRAL FABRICATION
Mansfield, OH 44906
419-529-2744 FAX 419-529-5387 http://www.northcentralfab
AISC CERTIFIED FABRICATOR

DESCRIPTION	DATE	DATE	JOB No.
BEAM	05/14/2011		70234
	DRAWN BY TMc	CHECKED BY TAN	DRG No. B68

PHASE				
1	2	3	4	5
1	0	0	0	0

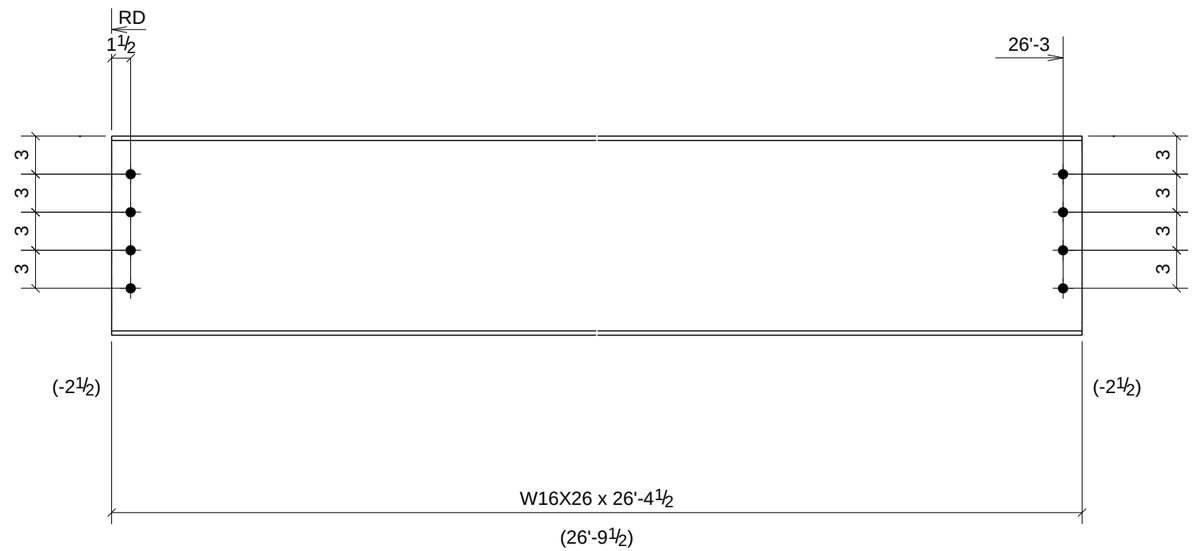

PROCESS CONTROL
PROCESS BY
FAB: _____
FIT AND WELD: _____
INSPECTION: _____
OTHER (IF NEEDED) _____
_____ : _____
_____ : _____
_____ : _____
_____ : _____
REFERENCE LATEST ERECTION DRAWINGS FOR MATERIAL & FABRICATION INFORMATION

ONE - BEAM - B70

W	15 11/16" x 1/4"
F	5 1/2" x 3/8"

DATE	NO.	DESCRIPTION	BY
5/28/11	B	For Checking	TMc
5/16/11	A	For Approval	TMc

BILL OF MATERIAL

Qty Ea.	Qty Tot	Piece Mark	Description	Length	Weight Total	Remarks	Adv Mill #	Steel Grade
	1	B70	BEAM					
	1		W16X26	26'-4 1/2"	689	SQ-2		A992

STEEL ASTM	A992		UNO
ELECTRODES	E70XX L.H.		UNO
WELDS	1/4" FILLET		UNO
OPEN HOLES	13/16"	UNO	FINISH PER SPECS
BOLTS	3/4" A325N		UNO
PAINT	1 S/C STD PRIMER U.N.O.		UNO

PROJECT NAME
OLDE ORCHARD ELEMENTARY SCHOOL

LOCATION
800 McNAUGHTEN RD. COLUMBUS, OHIO 43213

CONTRACTOR
THOMAS AND MARKER CONSTRUCTION

ARCHITECT
BRAUN & STEIDL

North Central Fabrication, Ltd.
NORTH CENTRAL FABRICATION
Mansfield, OH 44906
419-529-2744 FAX 419-529-5387 http://www.northcentralfab
AISC CERTIFIED FABRICATOR

DESCRIPTION	DATE	DATE	JOB No.
BEAM	05/19/2011		70234
	DRAWN BY TMc	CHECKED BY TAN	DRG No. B70

PHASE				
1	2	3	4	5
1	0	0	0	0

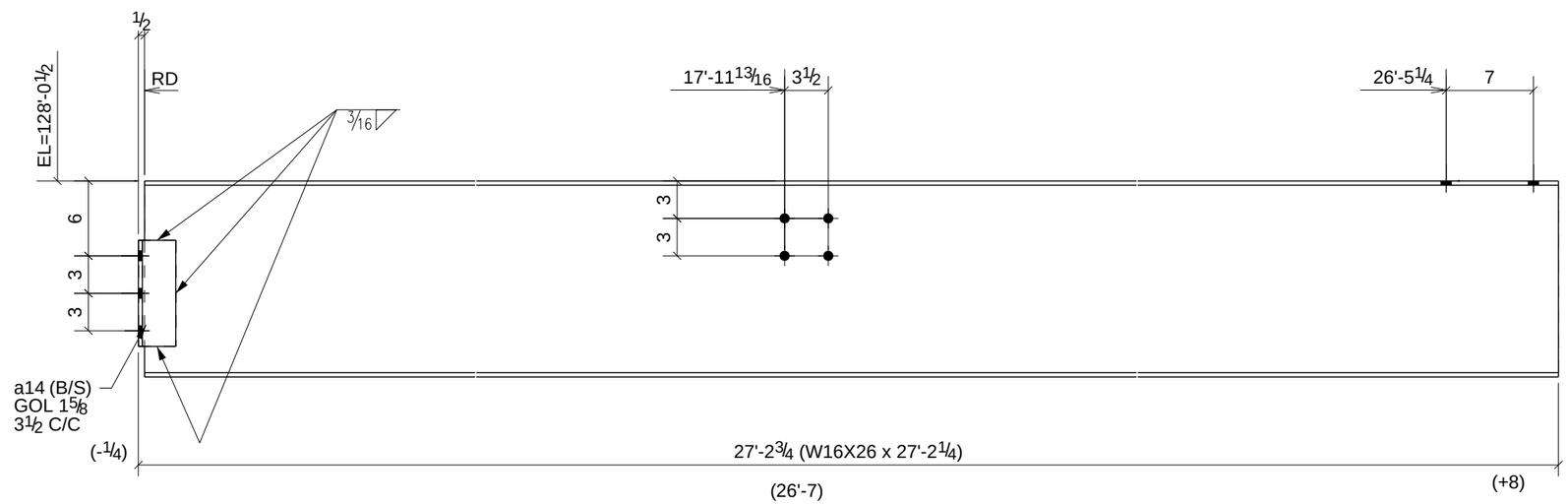

PROCESS CONTROL
PROCESS BY
FAB: _____
FIT AND WELD: _____
INSPECTION: _____
OTHER (IF NEEDED) _____
_____ : _____
_____ : _____
_____ : _____
_____ : _____
REFERENCE LATEST ERECTION DRAWINGS FOR MATERIAL & FABRICATION INFORMATION

ONE - BEAM - B71

W	15 11/16" x 1/4"
F	5 1/2" x 3/8"

DATE	NO.	DESCRIPTION	BY
5/28/11	B	For Checking	TMc
5/16/11	A	For Approval	TMc

BILL OF MATERIAL

Qty Ea.	Qty Tot	Piece Mark	Description	Length	Weight Total	Remarks	Adv Mill #	Steel Grade
	1	B71	BEAM					
	1		W16X26	27'-2 1/4"	711	SQ-2		A992
	2	a14	L3X3X5/16	0'-8 1/2"	9			A36

STEEL ASTM	A992	UNO
ELECTRODES	E70XX L.H.	UNO
WELDS	1/4" FILLET	UNO
OPEN HOLES	13/16" UNO	FINISH PER SPECS
BOLTS	3/4" A325N	UNO
PAINT	1 S/C STD PRIMER U.N.O.	UNO

PROJECT NAME
OLDE ORCHARD ELEMENTARY SCHOOL

LOCATION
800 McNAUGHTEN RD. COLUMBUS, OHIO 43213

CONTRACTOR
THOMAS AND MARKER CONSTRUCTION

ARCHITECT
BRAUN & STEIDL

North Central Fabrication, Ltd.
NORTH CENTRAL FABRICATION
Mansfield, OH 44906
419-529-2744 FAX 419-529-5387 http://www.northcentralfab
AISC CERTIFIED FABRICATOR

DESCRIPTION	DATE	DATE	JOB No.
BEAM	05/18/2011		70234
	DRAWN BY TMc	CHECKED BY TAN	DRG No. B71

PHASE				
1	2	3	4	5
1	0	0	0	0

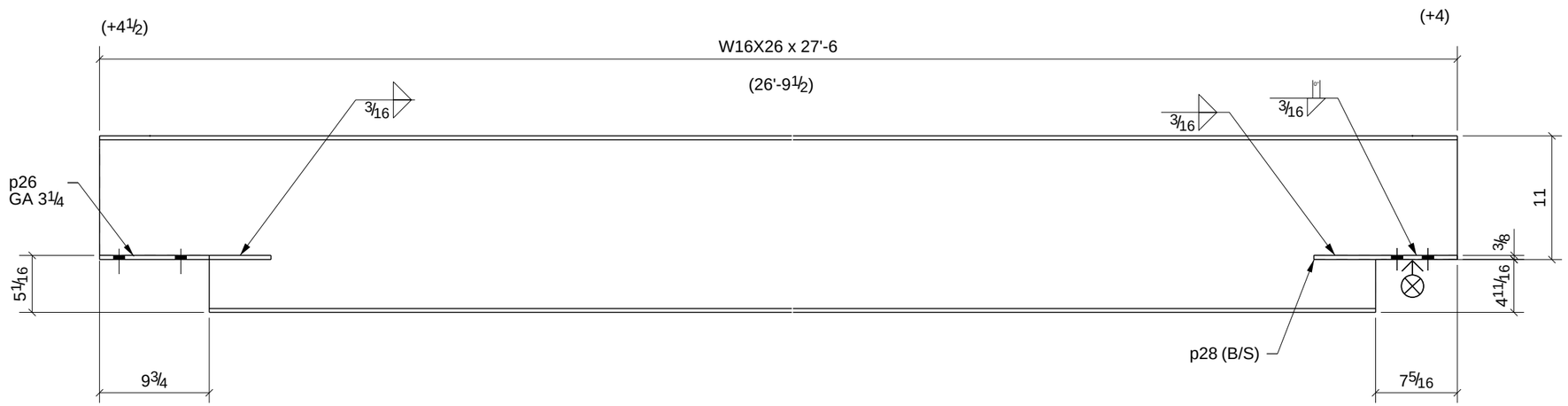

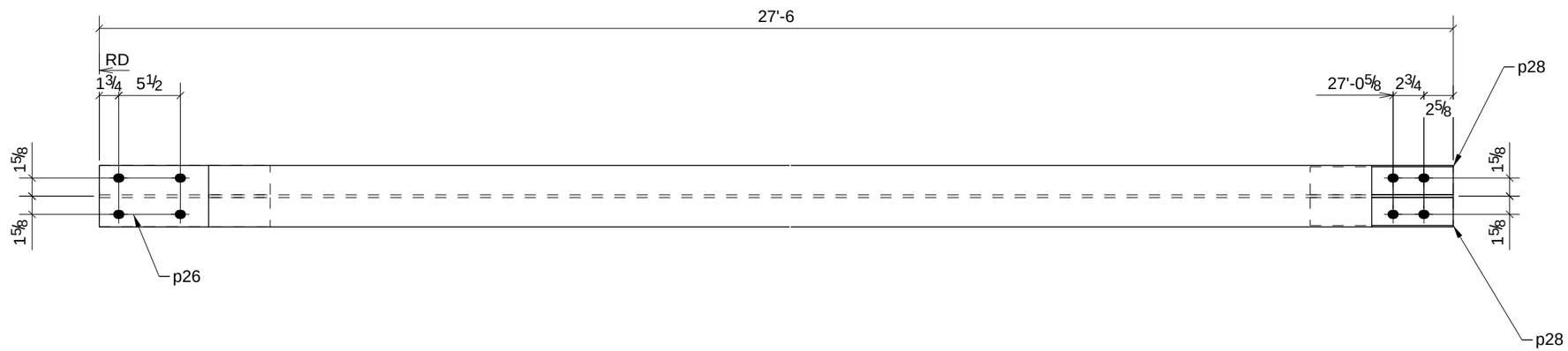

ONE - BEAM - B73

W	15 11/16" x 1/4"
F	5 1/2" x 3/8"

PROCESS CONTROL
PROCESS BY
FAB:
FIT AND WELD:
INSPECTION:
OTHER (IF NEEDED)
REFERENCE LATEST ERECTION DRAWINGS FOR MATERIAL & FABRICATION INFORMATION

BILL OF MATERIAL

Qty Ea.	Qty Tot	Piece Mark	Description	Length	Weight Total	Remarks	Adv Mill #	Steel Grade
	1	B73	BEAM					
	1		W16X26	27'-6"	719	SQ-2		A992
	1	p26	BAR3/8"X5 1/2"	1'-3 1/4"	9			A992
	2	p28	BAR3/8"X2 1/2"	1'-0 13/16"	7			A992

STEEL ASTM	A992		UNO
ELECTRODES	E70XX L.H.		UNO
WELDS	1/4" FILLET		UNO
OPEN HOLES	13/16"	UNO	FINISH PER SPECS
BOLTS	3/4" A325N		UNO
PAINT	1 S/C STD PRIMER U.N.O.		UNO

PROJECT NAME
OLDE ORCHARD ELEMENTARY SCHOOL

LOCATION
800 McNAUGHTEN RD. COLUMBUS, OHIO 43213

CONTRACTOR
THOMAS AND MARKER CONSTRUCTION

ARCHITECT
BRAUN & STEIDL

DATE	NO.	DESCRIPTION	BY
5/28/11	B	For Checking	TMc
5/16/11	A	For Approval	TMc

North Central Fabrication, Ltd.

NORTH CENTRAL FABRICATION
Mansfield, OH 44906
419-529-2744 FAX 419-529-5387 http://www.northcentralfab

AISC CERTIFIED FABRICATOR

DESCRIPTION	DATE	DATE	JOB No.
BEAM	05/18/2011		70234
	DRAWN BY TMc	CHECKED BY TAN	DRG No. B73

PHASE				
1	2	3	4	5
1	0	0	0	0

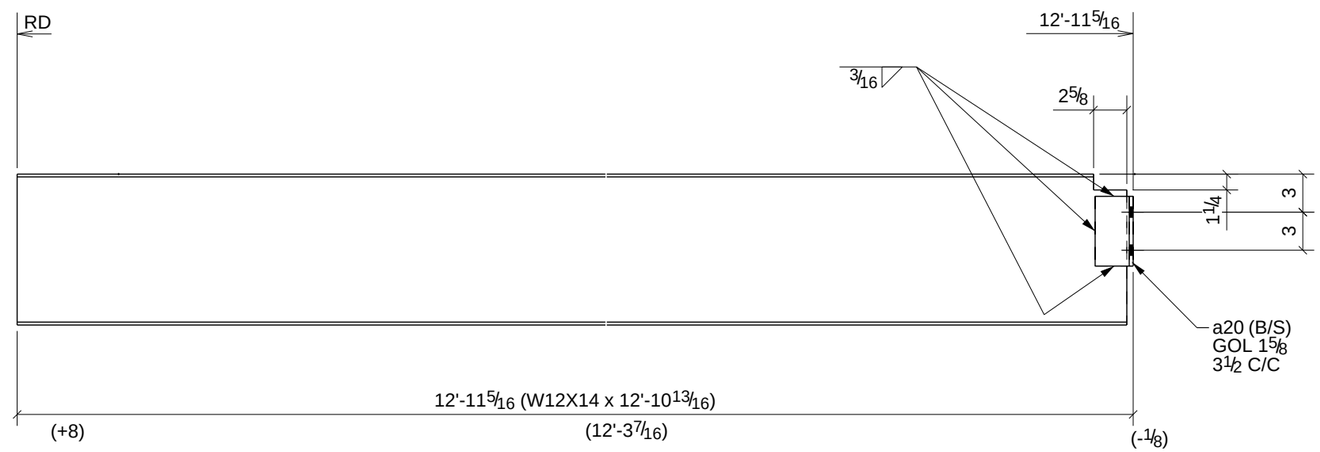

PROCESS CONTROL
PROCESS BY
FAB: _____
FIT AND WELD: _____
INSPECTION: _____
OTHER (IF NEEDED)
_____ : _____
_____ : _____
_____ : _____
_____ : _____
REFERENCE LATEST ERECTION DRAWINGS FOR MATERIAL & FABRICATION INFORMATION

ONE - BEAM - B74

W	11 7/8" x 3/16"
F	4" x 1/4"

DATE	NO.	DESCRIPTION	BY
5/28/11	B	For Checking	TMc
5/16/11	A	For Approval	TMc

BILL OF MATERIAL

Qty Ea.	Qty Tot	Piece Mark	Description	Length	Weight Total	Remarks	Adv Mill #	Steel Grade
	1	B74	BEAM					
	1		W12X14	12'-10 13/16"	183	SQ-2		A992
	2	a20	L3X3X5/16	0'-5 1/2"	6			A36

STEEL ASTM	A992	UNO
ELECTRODES	E70XX L.H.	UNO
WELDS	1/4" FILLET	UNO
OPEN HOLES	13/16" UNO	FINISH PER SPECS
BOLTS	3/4" A325N	UNO
PAINT	1 S/C STD PRIMER U.N.O.	UNO

PROJECT NAME
OLDE ORCHARD ELEMENTARY SCHOOL

LOCATION
800 McNAUGHTEN RD. COLUMBUS, OHIO 43213

CONTRACTOR
THOMAS AND MARKER CONSTRUCTION

ARCHITECT
BRAUN & STEIDL

North Central Fabrication, Ltd.
NORTH CENTRAL FABRICATION
Mansfield, OH 44906
419-529-2744 FAX 419-529-5387 http://www.northcentralfab
AISC CERTIFIED FABRICATOR

DESCRIPTION	DATE	DATE	JOB No.
BEAM	05/18/2011		70234
	DRAWN BY TMc	CHECKED BY TAN	DRG No. B74

PHASE				
1	2	3	4	5
1	0	0	0	0

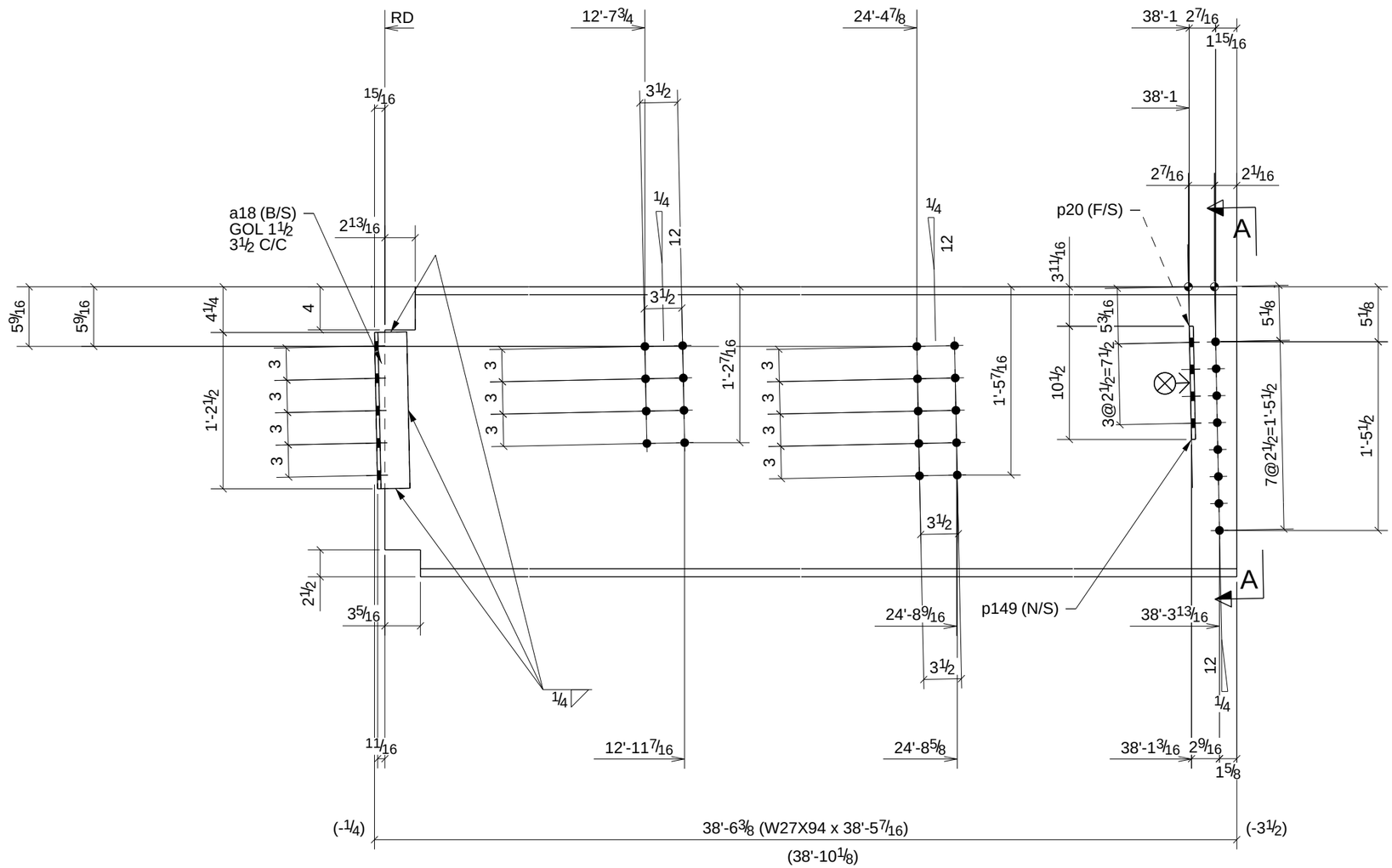

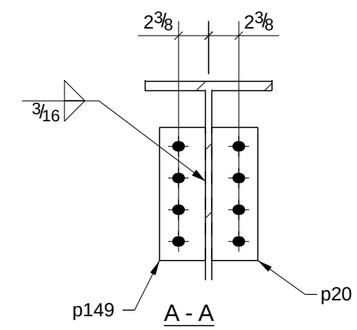

PROCESS CONTROL
PROCESS BY
FAB: _____
FIT AND WELD: _____
INSPECTION: _____
OTHER (IF NEEDED)
_____ : _____
_____ : _____
_____ : _____
_____ : _____
REFERENCE LATEST ERECTION DRAWINGS FOR MATERIAL & FABRICATION INFORMATION

ONE - BEAM - B76

W	26 7/8" x 1/2"
F	10" x 3/4"

BILL OF MATERIAL

Qty Ea.	Qty Tot	Piece Mark	Description	Length	Weight Total	Remarks	Adv Mill #	Steel Grade
	1	B76	BEAM					
	1		W27X94	38'-5 7/16"	3625	SQ-2		A992
	2	a18	L3X3X5/16	1'-2 1/2"	15			A36
	1	p20	PL3/8"X3 5/8"	0'-10 1/2"	4			A36
	1	p149	PL3/8"X3 5/8"	0'-10 1/2"	4			A992

STEEL ASTM	A992	UNO
ELECTRODES	E70XX L.H.	UNO
WELDS	1/4" FILLET	UNO
OPEN HOLES	13/16" UNO	FINISH PER SPECS
BOLTS	3/4" A325N	UNO
PAINT	1 S/C STD PRIMER U.N.O.	UNO

PROJECT NAME
OLDE ORCHARD ELEMENTARY SCHOOL

LOCATION
800 McNAUGHTEN RD. COLUMBUS, OHIO 43213

CONTRACTOR
THOMAS AND MARKER CONSTRUCTION

ARCHITECT
BRAUN & STEIDL

DATE	NO.	DESCRIPTION	BY
5/28/11	B	For Checking	TMc
5/16/11	A	For Approval	TMc

North Central Fabrication, Ltd.

NORTH CENTRAL FABRICATION
Mansfield, OH 44906
419-529-2744 FAX 419-529-5387 http://www.northcentralfab

AISC CERTIFIED FABRICATOR

DESCRIPTION	DATE	DATE	JOB No.
BEAM	05/14/2011		70234
	DRAWN BY TMc	CHECKED BY TAN	DRG No. B76

PHASE				
1	2	3	4	5
1	0	0	0	0

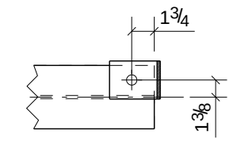

A - A

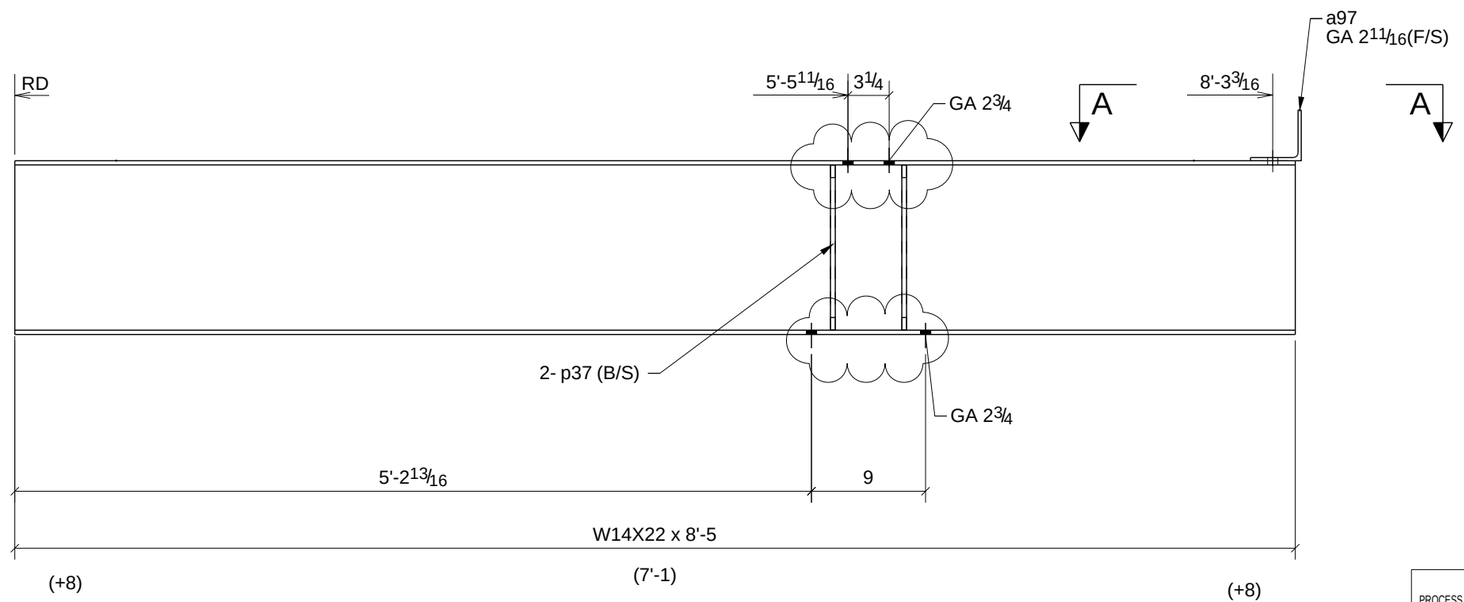

PROCESS CONTROL
PROCESS BY
FAB: _____
FIT AND WELD: _____
INSPECTION: _____
OTHER (IF NEEDED)
_____ : _____
_____ : _____
_____ : _____
_____ : _____
REFERENCE LATEST ERECTION DRAWINGS FOR MATERIAL & FABRICATION INFORMATION

ONE - BEAM - B77

W	13 11/16" x 1/4"
F	5" x 5/16"

BILL OF MATERIAL

Qty Ea.	Qty Tot	Piece Mark	Description	Length	Weight Total	Remarks	Adv Mill #	Steel Grade
	1	B77	BEAM					
	1		W14X22	8'-5"	186	SQ-2		A992
	1	a97	L4X4X1/4	0'-3"	2			A36
	4	p37	PL3/8"X2 3/8"	1'-1"	13			A36
	1		3/4"Ø A325N BOLT	0'-1 3/4"	1			

STEEL ASTM	A992	UNO	
ELECTRODES	E70XX L.H.	UNO	
WELDS	1/4" FILLET	UNO	
OPEN HOLES	13/16"	UNO	FINISH PER SPECS
BOLTS	3/4" A325N	UNO	
PAINT	1 S/C STD PRIMER U.N.O.	UNO	

PROJECT NAME
OLDE ORCHARD ELEMENTARY SCHOOL

LOCATION
800 McNAUGHTEN RD. COLUMBUS, OHIO 43213

CONTRACTOR
THOMAS AND MARKER CONSTRUCTION

ARCHITECT
BRAUN & STEIDL

DATE	NO.	DESCRIPTION	BY
5/28/11	B	For Checking	TMc
5/16/11	A	For Approval	TMc

North Central Fabrication, Ltd.

NORTH CENTRAL FABRICATION
Mansfield, OH 44906
419-529-2744 FAX 419-529-5387 http://www.northcentralfab

AISC CERTIFIED FABRICATOR

DESCRIPTION	DATE	DATE	JOB No.
BEAM	05/14/2011		70234
	DRAWN BY TMc	CHECKED BY TAN	DRG No. B77

PHASE				
1	2	3	4	5
1	0	0	0	0

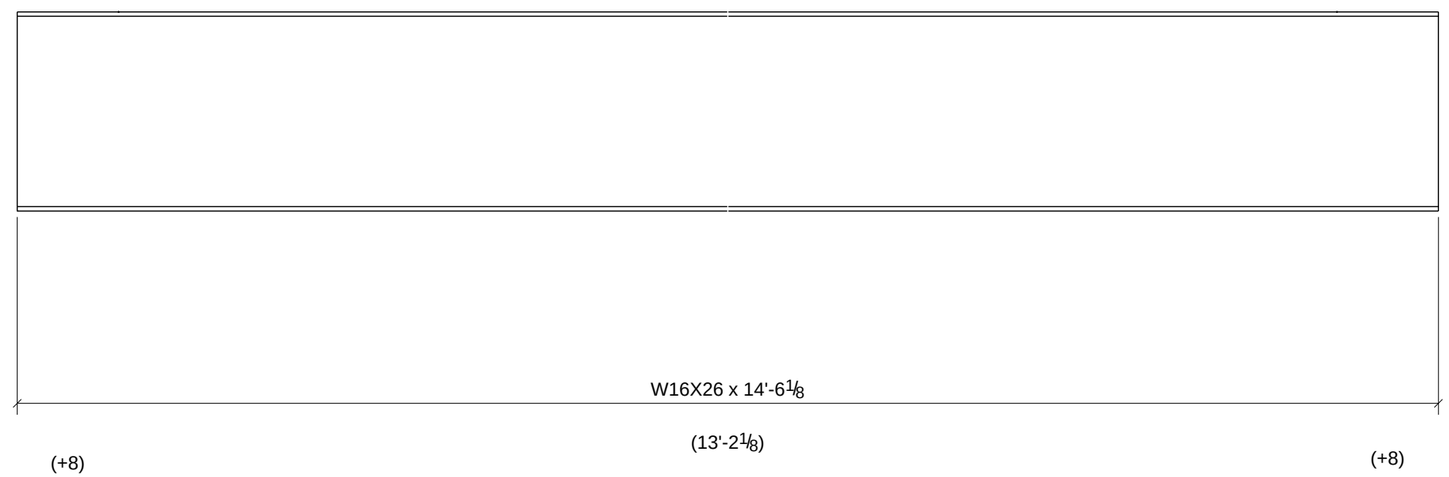

PROCESS CONTROL
PROCESS BY
FAB: _____
FIT AND WELD: _____
INSPECTION: _____
OTHER (IF NEEDED) _____
_____ : _____
_____ : _____
_____ : _____
_____ : _____
REFERENCE LATEST ERECTION DRAWINGS FOR MATERIAL & FABRICATION INFORMATION

ONE - BEAM - B78

W	15 11/16" x 1/4"
F	5 1/2" x 3/8"

DATE	NO.	DESCRIPTION	BY
5/28/11	B	For Checking	TMc
5/16/11	A	For Approval	TMc

BILL OF MATERIAL

Qty Ea.	Qty Tot	Piece Mark	Description	Length	Weight Total	Remarks	Adv Mill #	Steel Grade
	1	B78	BEAM					
	1		W16X26	14'-6 1/8"	379	SQ-2		A992

STEEL ASTM	A992	UNO
ELECTRODES	E70XX L.H.	UNO
WELDS	1/4" FILLET	UNO
OPEN HOLES	13/16" UNO	FINISH PER SPECS
BOLTS	3/4" A325N	UNO
PAINT	1 S/C STD PRIMER U.N.O.	UNO

PROJECT NAME
OLDE ORCHARD ELEMENTARY SCHOOL

LOCATION
800 McNAUGHTEN RD. COLUMBUS, OHIO 43213

CONTRACTOR
THOMAS AND MARKER CONSTRUCTION

ARCHITECT
BRAUN & STEIDL

North Central Fabrication, Ltd.
NORTH CENTRAL FABRICATION
Mansfield, OH 44906
419-529-2744 FAX 419-529-5387 http://www.northcentralfab
AISC CERTIFIED FABRICATOR

DESCRIPTION	DATE	DATE	JOB No.
BEAM	05/14/2011		70234
	DRAWN BY TMc	CHECKED BY TAN	DRG No. B78

PHASE				
1	2	3	4	5
1	0	0	0	0

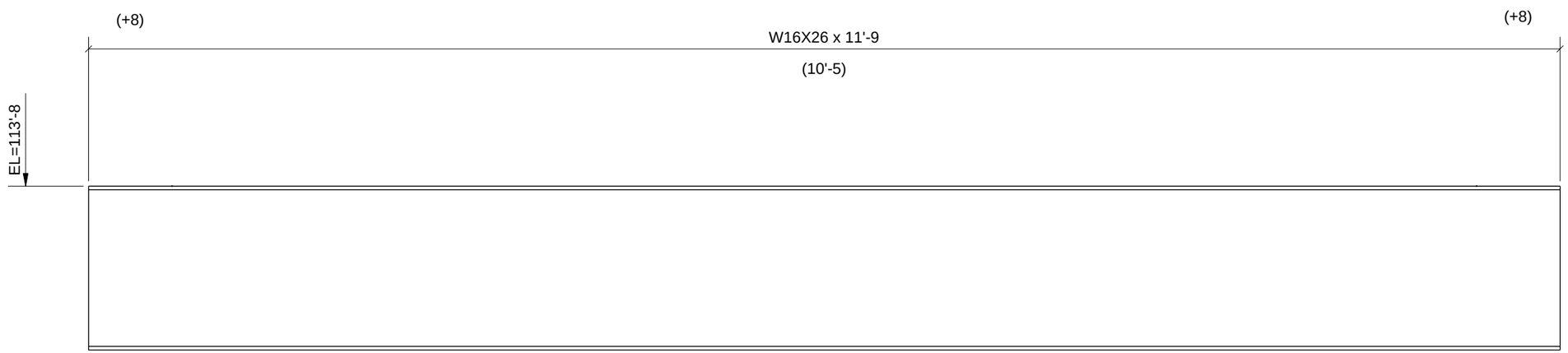

PROCESS CONTROL
PROCESS BY
FAB: _____
FIT AND WELD: _____
INSPECTION: _____
OTHER (IF NEEDED) _____
_____ : _____
_____ : _____
_____ : _____
_____ : _____
REFERENCE LATEST ERECTION DRAWINGS FOR MATERIAL & FABRICATION INFORMATION

ONE - BEAM - B79

W	15 11/16" x 1/4"
F	5 1/2" x 3/8"

DATE	NO.	DESCRIPTION	BY
5/28/11	B	For Checking	TMc
5/16/11	A	For Approval	TMc

BILL OF MATERIAL

Qty Ea.	Qty Tot	Piece Mark	Description	Length	Weight Total	Remarks	Adv Mill #	Steel Grade
	1	B79	BEAM					
	1		W16X26	11'-9"	307	SQ-2		A992

STEEL ASTM	A992	UNO
ELECTRODES	E70XX L.H.	UNO
WELDS	1/4" FILLET	UNO
OPEN HOLES	13/16" UNO	FINISH PER SPECS
BOLTS	3/4" A325N	UNO
PAINT	1 S/C STD PRIMER U.N.O.	UNO

PROJECT NAME
OLDE ORCHARD ELEMENTARY SCHOOL

LOCATION
800 McNAUGHTEN RD. COLUMBUS, OHIO 43213

CONTRACTOR
THOMAS AND MARKER CONSTRUCTION

ARCHITECT
BRAUN & STEIDL

North Central Fabrication, Ltd.
NORTH CENTRAL FABRICATION
Mansfield, OH 44906
419-529-2744 FAX 419-529-5387 http://www.northcentralfab
AISC CERTIFIED FABRICATOR

DESCRIPTION	DATE	DATE	JOB No.
BEAM	05/18/2011		70234
	DRAWN BY TMc	CHECKED BY TAN	DRG No. B79

PHASE				
1	2	3	4	5
1	0	0	0	0

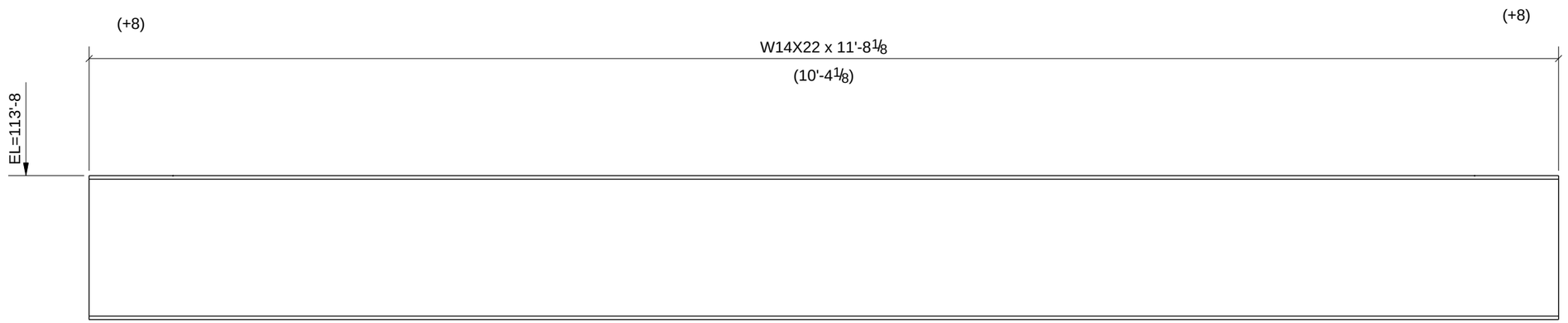

PROCESS CONTROL
PROCESS BY
FAB: _____
FIT AND WELD: _____
INSPECTION: _____
OTHER (IF NEEDED) _____
_____ : _____
_____ : _____
_____ : _____
_____ : _____
REFERENCE LATEST ERECTION DRAWINGS FOR MATERIAL & FABRICATION INFORMATION

ONE - BEAM - B80

W	13 11/16" x 1/4"
F	5" x 5/16"

DATE	NO.	DESCRIPTION	BY
5/28/11	B	For Checking	TMc
5/16/11	A	For Approval	TMc

BILL OF MATERIAL

Qty Ea.	Qty Tot	Piece Mark	Description	Length	Weight Total	Remarks	Adv Mill #	Steel Grade
	1	B80	BEAM					
	1		W14X22	11'-8 1/8"	258	SQ-2		A992

STEEL ASTM	A992	UNO
ELECTRODES	E70XX L.H.	UNO
WELDS	1/4" FILLET	UNO
OPEN HOLES	13/16" UNO	FINISH PER SPECS
BOLTS	3/4" A325N	UNO
PAINT	1 S/C STD PRIMER U.N.O.	UNO

PROJECT NAME
OLDE ORCHARD ELEMENTARY SCHOOL

LOCATION
800 McNAUGHTEN RD. COLUMBUS, OHIO 43213

CONTRACTOR
THOMAS AND MARKER CONSTRUCTION

ARCHITECT
BRAUN & STEIDL

North Central Fabrication, Ltd.
NORTH CENTRAL FABRICATION
Mansfield, OH 44906
419-529-2744 FAX 419-529-5387 http://www.northcentralfab
AISC CERTIFIED FABRICATOR

DESCRIPTION	DATE	DATE	JOB No.
BEAM	05/18/2011		70234
	DRAWN BY TMc	CHECKED BY TAN	DRG No. B80

PHASE				
1	2	3	4	5
1	0	0	0	0

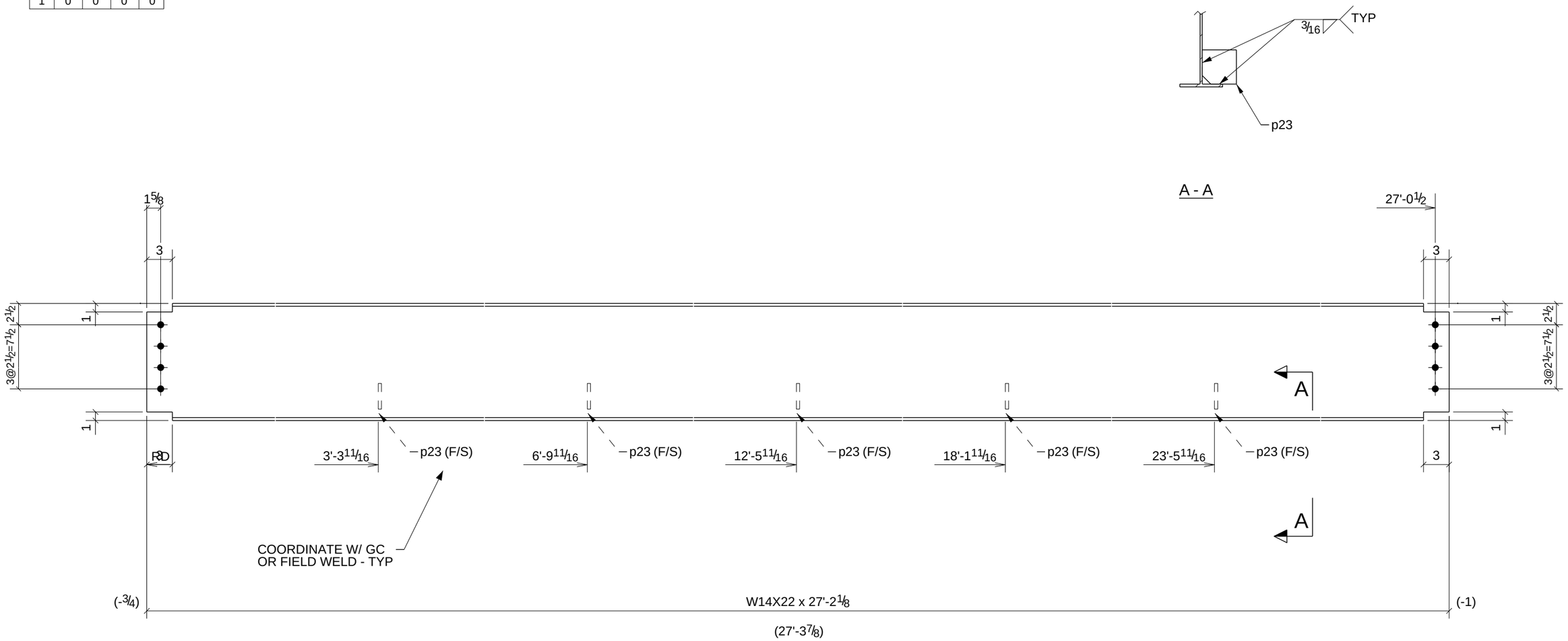

PROCESS CONTROL
PROCESS BY
FAB: _____
FIT AND WELD: _____
INSPECTION: _____
OTHER (IF NEEDED) _____
_____ : _____
_____ : _____
_____ : _____
_____ : _____
REFERENCE LATEST ERECTION DRAWINGS FOR MATERIAL & FABRICATION INFORMATION

ONE - BEAM - B81

W	13 11/16" x 1/4"
F	5" x 5/16"

DATE	NO.	DESCRIPTION	BY
5/28/11	B	For Checking	TMc
5/16/11	A	For Approval	TMc

BILL OF MATERIAL

Qty Ea.	Qty Tot	Piece Mark	Description	Length	Weight Total	Remarks	Adv Mill #	Steel Grade
	1	B81	BEAM					
	1		W14X22	27'-2 1/8"	600	SQ-2		A992
	5	p23	BAR3/8"X4"	0'-4"	8			A36

STEEL ASTM	A992	UNO
ELECTRODES	E70XX L.H.	UNO
WELDS	1/4" FILLET	UNO
OPEN HOLES	13/16" UNO	FINISH PER SPECS
BOLTS	3/4" A325N	UNO
PAINT	1 S/C STD PRIMER U.N.O.	UNO

PROJECT NAME
OLDE ORCHARD ELEMENTARY SCHOOL

LOCATION
800 McNAUGHTEN RD. COLUMBUS, OHIO 43213

CONTRACTOR
THOMAS AND MARKER CONSTRUCTION

ARCHITECT
BRAUN & STEIDL

North Central Fabrication, Ltd.

NORTH CENTRAL FABRICATION
Mansfield, OH 44906
419-529-2744 FAX 419-529-5387 http://www.northcentralfab

AISC CERTIFIED FABRICATOR

DESCRIPTION	DATE	DATE	JOB No.
BEAM	05/14/2011		70234
	DRAWN BY TMc	CHECKED BY TAN	DRG No. B81

PHASE				
1	2	3	4	5
1	0	0	0	0

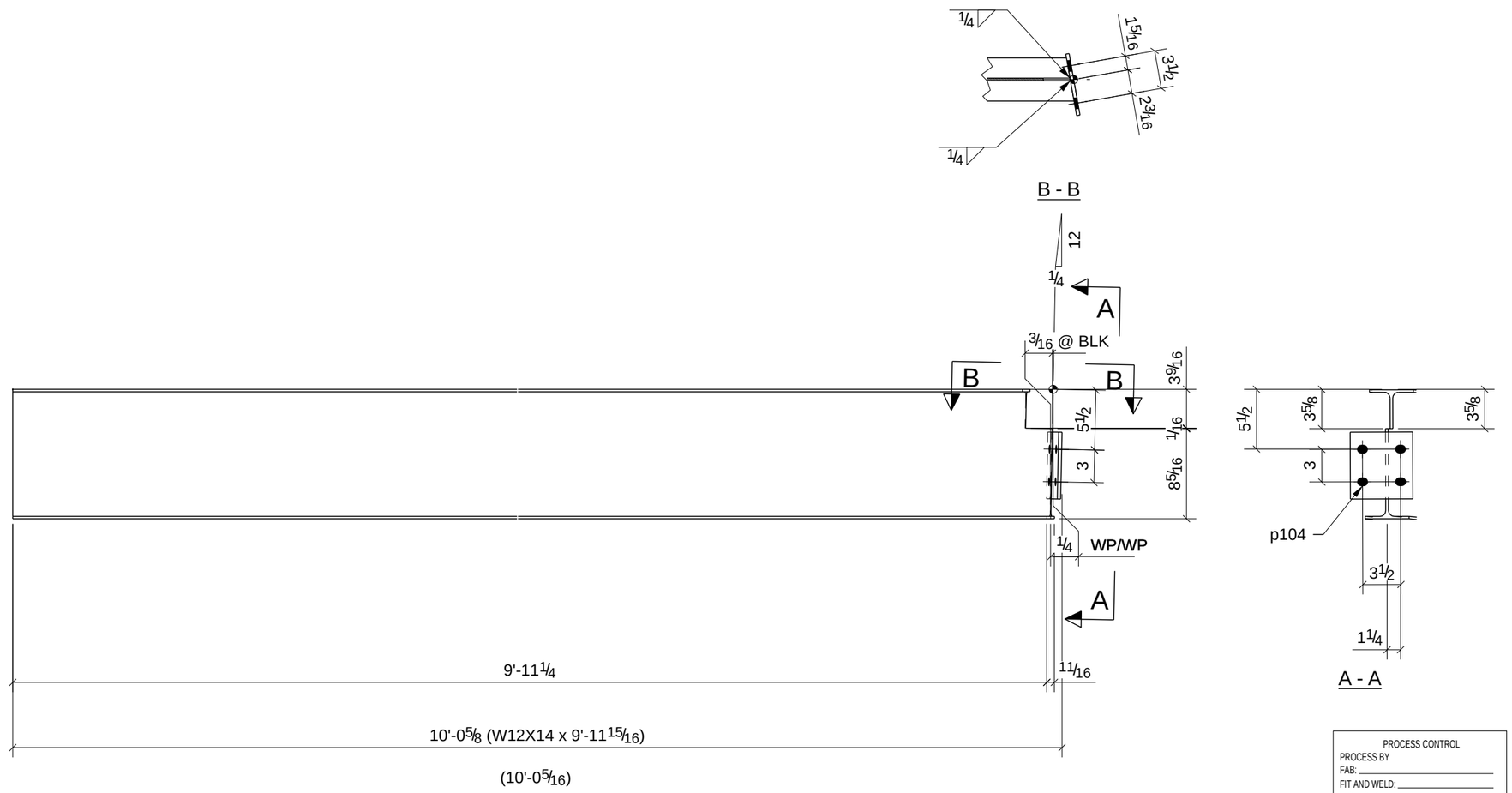

PROCESS CONTROL
PROCESS BY
FAB: _____
FIT AND WELD: _____
INSPECTION: _____
OTHER (IF NEEDED) _____
_____ : _____
_____ : _____
_____ : _____
_____ : _____
REFERENCE LATEST ERECTION DRAWINGS FOR MATERIAL & FABRICATION INFORMATION

ONE - BEAM - B82

W	11 7/8" x 3/16"
F	4" x 1/4"

DATE	NO.	DESCRIPTION	BY
5/28/11	B	For Checking	TMc
5/16/11	A	For Approval	TMc

BILL OF MATERIAL

Qty Ea.	Qty Tot	Piece Mark	Description	Length	Weight Total	Remarks	Adv Mill #	Steel Grade
	1	B82	BEAM					
	1		W12X14	9'-11 15/16"	142	SQ-1/BEV-1		A992
	1	p104	BAR5/16"X5 3/4"	0'-6 1/8"	3			A36

STEEL ASTM	A992	UNO
ELECTRODES	E70XX L.H.	UNO
WELDS	1/4" FILLET	UNO
OPEN HOLES	13/16" UNO	FINISH PER SPECS
BOLTS	3/4" A325N	UNO
PAINT	1 S/C STD PRIMER U.N.O.	UNO

PROJECT NAME
OLDE ORCHARD ELEMENTARY SCHOOL

LOCATION
800 McNAUGHTEN RD. COLUMBUS, OHIO 43213

CONTRACTOR
THOMAS AND MARKER CONSTRUCTION

ARCHITECT
BRAUN & STEIDL

North Central Fabrication, Ltd.
NORTH CENTRAL FABRICATION
Mansfield, OH 44906
419-529-2744 FAX 419-529-5387 http://www.northcentralfab
AISC CERTIFIED FABRICATOR

DESCRIPTION	DATE	DATE	JOB No.
BEAM	05/14/2011		70234
	DRAWN BY TMc	CHECKED BY TAN	DRG No. B82

PHASE				
1	2	3	4	5
1	0	0	0	0

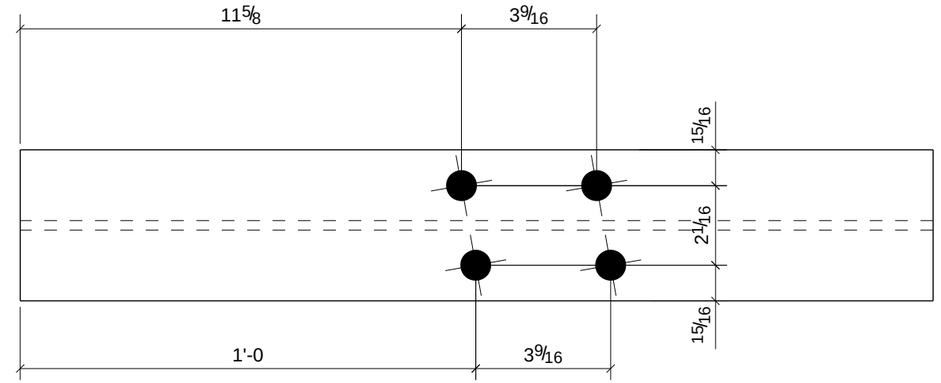

A - A

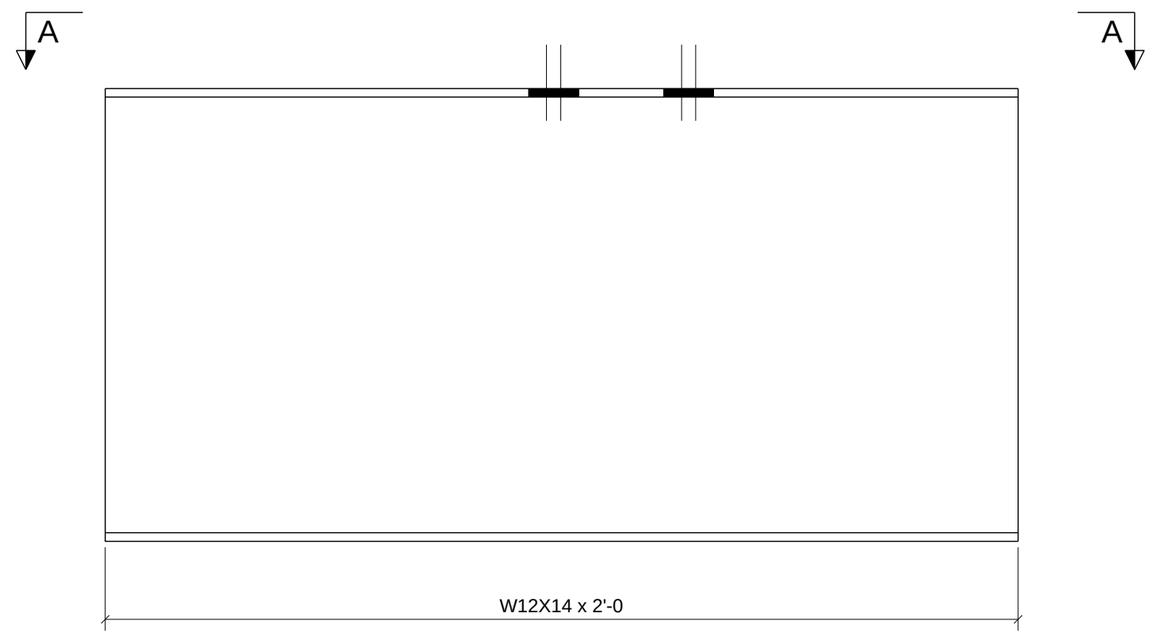

PROCESS CONTROL
PROCESS BY
FAB: _____
FIT AND WELD: _____
INSPECTION: _____
OTHER (IF NEEDED) _____
_____ : _____
_____ : _____
_____ : _____
_____ : _____
REFERENCE LATEST ERECTION DRAWINGS FOR MATERIAL & FABRICATION INFORMATION

ONE - BEAM - B83

W	11 7/8" x 3/16"
F	4" x 1/4"

DATE	NO.	DESCRIPTION	BY
5/28/11	B	For Checking	TMc
5/16/11	A	For Approval	TMc

BILL OF MATERIAL

Qty Ea.	Qty Tot	Piece Mark	Description	Length	Weight Total	Remarks	Adv Mill #	Steel Grade
	1	B83	BEAM					
	1		W12X14	2'-0"	28	SQ-2		A992

STEEL ASTM	A992	UNO
ELECTRODES	E70XX L.H.	UNO
WELDS	1/4" FILLET	UNO
OPEN HOLES	13/16" UNO	FINISH PER SPECS
BOLTS	3/4" A325N	UNO
PAINT	1 S/C STD PRIMER U.N.O.	UNO

PROJECT NAME
OLDE ORCHARD ELEMENTARY SCHOOL

LOCATION
800 McNAUGHTEN RD. COLUMBUS, OHIO 43213

CONTRACTOR
THOMAS AND MARKER CONSTRUCTION

ARCHITECT
BRAUN & STEIDL

North Central Fabrication, Ltd.
NORTH CENTRAL FABRICATION
Mansfield, OH 44906
419-529-2744 FAX 419-529-5387 http://www.northcentralfab
AISC CERTIFIED FABRICATOR

DESCRIPTION	DATE	DATE	JOB No.
BEAM	05/14/2011		70234
	DRAWN BY TMc	CHECKED BY TAN	DRG No. B83

PHASE				
1	2	3	4	5
1	0	0	0	0

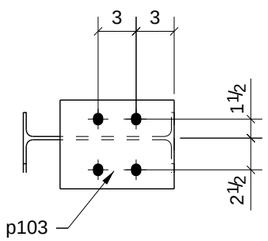

A - A

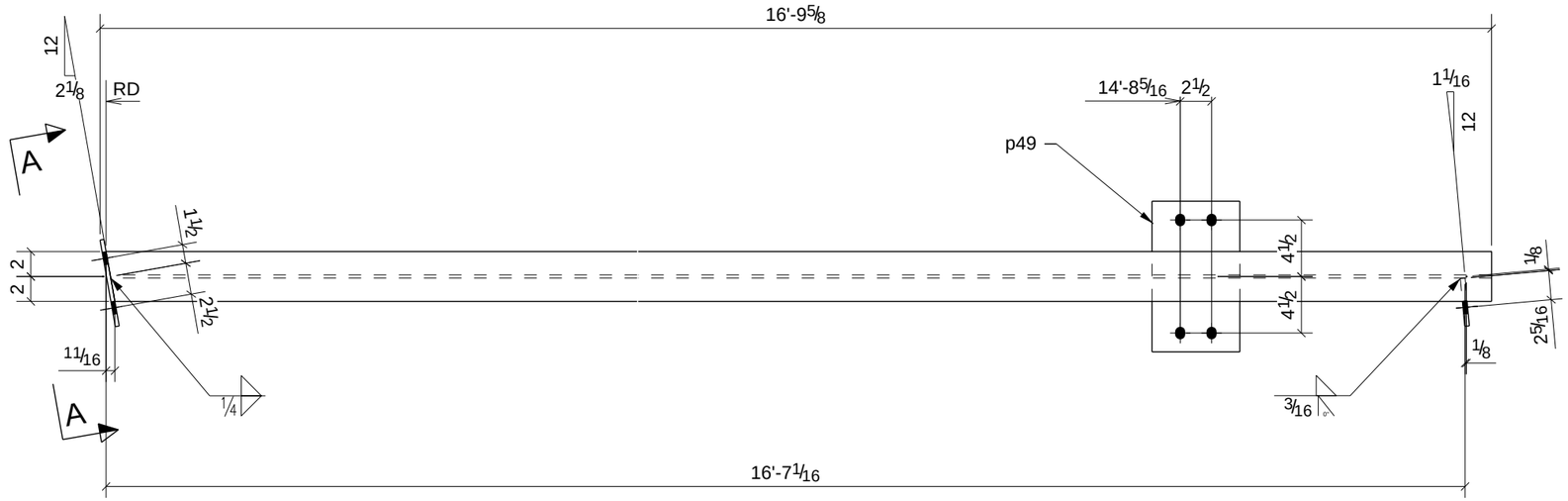

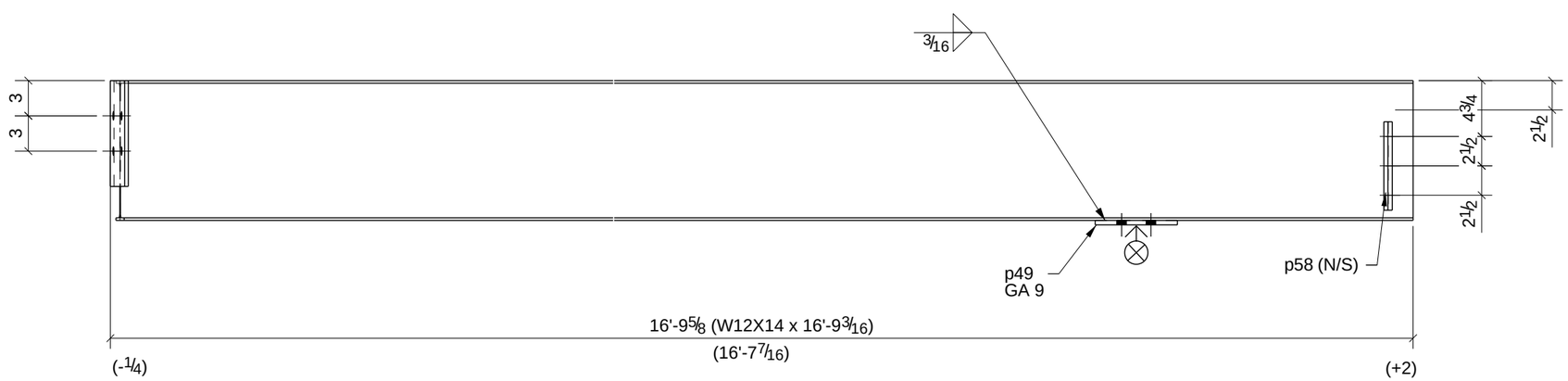

ONE - BEAM - B84

PROCESS CONTROL
PROCESS BY
FAB: _____
FIT AND WELD: _____
INSPECTION: _____
OTHER (IF NEEDED) _____
REFERENCE LATEST ERECTION DRAWINGS FOR MATERIAL & FABRICATION INFORMATION

BILL OF MATERIAL

Qty Ea.	Qty Tot	Piece Mark	Description	Length	Weight Total	Remarks	Adv Mill #	Steel Grade
	1	B84	BEAM					
	1		W12X14	16'-9 3/16"	237	SQ-1/BEV-1		A992
	1	p49	BAR3/8"X7"	1'-0"	9			A36
	1	p58	PL3/8"X3 13/16"	0'-7 1/2"	3			A992
	1	p103	BAR5/16"X7"	0'-9"	6			A36

W	11 7/8" x 3/16"	
F	4" x 1/4"	

STEEL ASTM	A992	UNO	
ELECTRODES	E70XX L.H.	UNO	
WELDS	1/4" FILLET	UNO	
OPEN HOLES	13/16" UNO	FINISH	PER SPECS
BOLTS	3/4" A325N	UNO	
PAINT	1 S/C STD PRIMER U.N.O.	UNO	

PROJECT NAME
OLDE ORCHARD ELEMENTARY SCHOOL

LOCATION
800 McNAUGHTEN RD. COLUMBUS, OHIO 43213

CONTRACTOR
THOMAS AND MARKER CONSTRUCTION

ARCHITECT
BRAUN & STEIDL

DATE	NO.	DESCRIPTION	BY
5/28/11	B	For Checking	TMc
5/16/11	A	For Approval	TMc

North Central Fabrication, Ltd.
NORTH CENTRAL FABRICATION
Mansfield, OH 44906
419-529-2744 FAX 419-529-5387 http://www.northcentralfab
AISC CERTIFIED FABRICATOR

DESCRIPTION: BEAM	DATE: 05/14/2011	DATE:	JOB No. 70234
	DRAWN BY: TMc	CHECKED BY: TAN	DRG No. B84

PHASE				
1	2	3	4	5
1	0	0	0	0

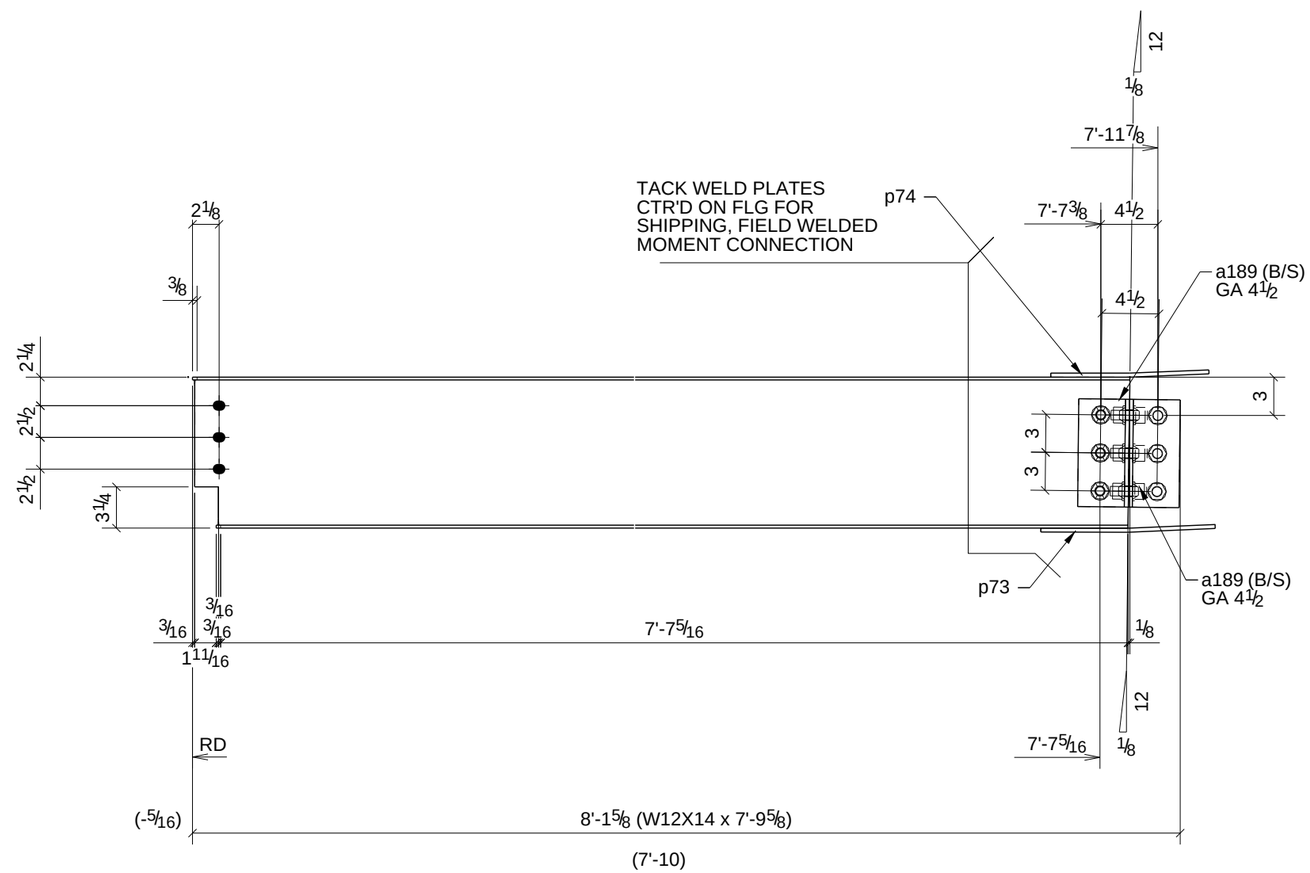

PROCESS CONTROL
PROCESS BY
FAB: _____
FIT AND WELD: _____
INSPECTION: _____
OTHER (IF NEEDED) _____
_____ : _____
_____ : _____
_____ : _____
_____ : _____
REFERENCE LATEST ERECTION DRAWINGS FOR MATERIAL & FABRICATION INFORMATION

ONE - BEAM - B85

W	11 7/8" x 3/16"
F	4" x 1/4"

BILL OF MATERIAL

Qty Ea.	Qty Tot	Piece Mark	Description	Length	Weight Total	Remarks	Adv Mill #	Steel Grade
	1	B85	BEAM					
	1		W12X14	7'-9 5/8"	110	BEV-2		A992
	4	a189	L4X4X5/16	0'-8 1/2"	23			A36
	1	p73	BAR5/16"X3 1/2"	1'-1 3/4"	4			A36
	1	p74	BAR5/16"X3 1/2"	1'-0 1/2"	4			A36
	3		3/4"Ø A325SC_TC BOLT	0'-3 15/16"	3			
	3		3/4"Ø A325SC_TC BOLT	0'-2"	2			
	6		3/4"Ø A325SC_TC BOLT	0'-1 3/4"	3			

STEEL ASTM	A992	UNO	
ELECTRODES	E70XX L.H.	UNO	
WELDS	1/4" FILLET	UNO	
OPEN HOLES	13/16"	UNO	FINISH PER SPECS
BOLTS	3/4" A325N	UNO	
PAINT	1 S/C STD PRIMER U.N.O.	UNO	

PROJECT NAME
OLDE ORCHARD ELEMENTARY SCHOOL

LOCATION
800 McNAUGHTEN RD. COLUMBUS, OHIO 43213

CONTRACTOR
THOMAS AND MARKER CONSTRUCTION

ARCHITECT
BRAUN & STEIDL

DATE	NO.	DESCRIPTION	BY
5/28/11	B	For Checking	TMc
5/16/11	A	For Approval	TMc

North Central Fabrication, Ltd.

NORTH CENTRAL FABRICATION
Mansfield, OH 44906
419-529-2744 FAX 419-529-5387 http://www.northcentralfab

AISC CERTIFIED FABRICATOR

DESCRIPTION	DATE	DATE	JOB No.
BEAM	05/14/2011		70234
	DRAWN BY TMc	CHECKED BY TAN	DRG No. B85

PHASE				
1	2	3	4	5
2	0	0	0	0

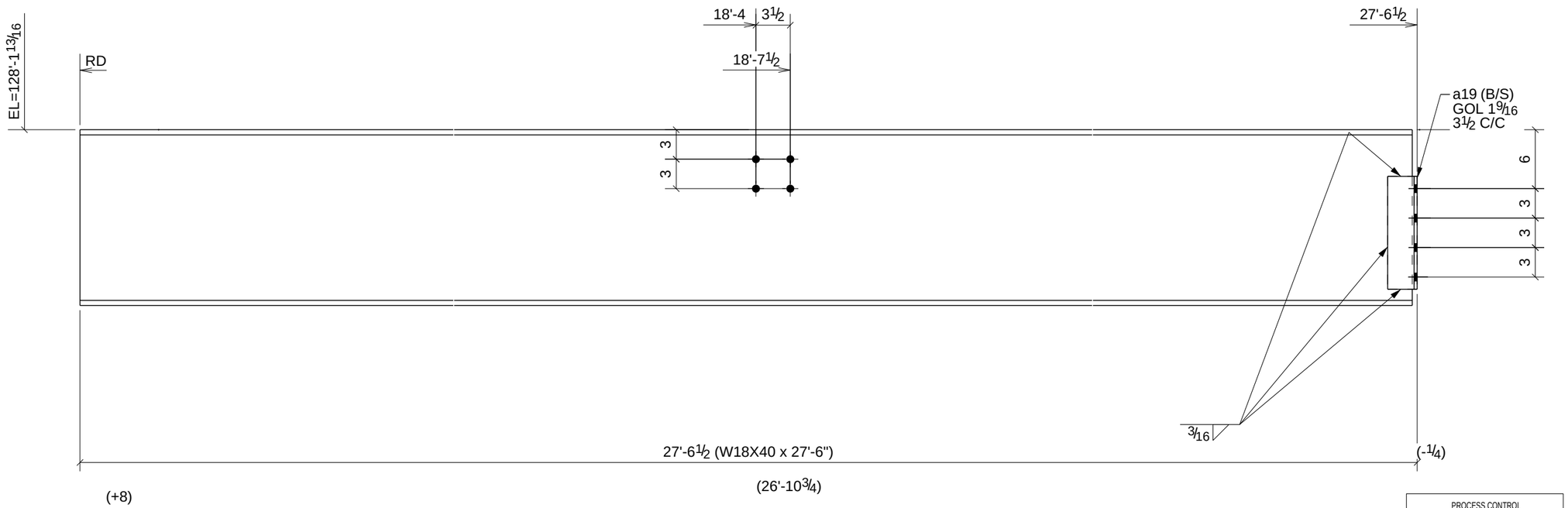

PROCESS CONTROL
PROCESS BY
FAB: _____
FIT AND WELD: _____
INSPECTION: _____
OTHER (IF NEEDED)
_____ : _____
_____ : _____
_____ : _____
_____ : _____
REFERENCE LATEST ERECTION DRAWINGS FOR MATERIAL & FABRICATION INFORMATION

2 - BEAMS - B86

W	17 7/8" x 1/4"
F	6" x 1/2"

DATE	NO.	DESCRIPTION	BY
5/28/11	B	For Checking	TMc
5/16/11	A	For Approval	TMc

BILL OF MATERIAL

Qty Ea.	Qty Tot	Piece Mark	Description	Length	Weight Total	Remarks	Adv Mill #	Steel Grade
	2	B86	BEAMS					
	2		W18X40	27'-6"	2209	SQ-2		A992
	4	a19	L3X3X5/16	0'-11 1/2"	23			A36

STEEL ASTM	A992	UNO
ELECTRODES	E70XX L.H.	UNO
WELDS	1/4" FILLET	UNO
OPEN HOLES	13/16" UNO	FINISH PER SPECS
BOLTS	3/4" A325N	UNO
PAINT	1 S/C STD PRIMER U.N.O.	UNO

PROJECT NAME
OLDE ORCHARD ELEMENTARY SCHOOL
LOCATION
800 McNAUGHTEN RD. COLUMBUS, OHIO 43213
CONTRACTOR
THOMAS AND MARKER CONSTRUCTION
ARCHITECT
BRAUN & STEIDL

North Central Fabrication, Ltd.
NORTH CENTRAL FABRICATION
Mansfield, OH 44906
419-529-2744 FAX 419-529-5387 http://www.northcentralfab
AISC CERTIFIED FABRICATOR

DESCRIPTION	DATE	DATE	JOB No.
BEAM	05/14/2011		70234
	DRAWN BY TMc	CHECKED BY TAN	DRG No. B86

PHASE				
1	2	3	4	5
1	0	0	0	0

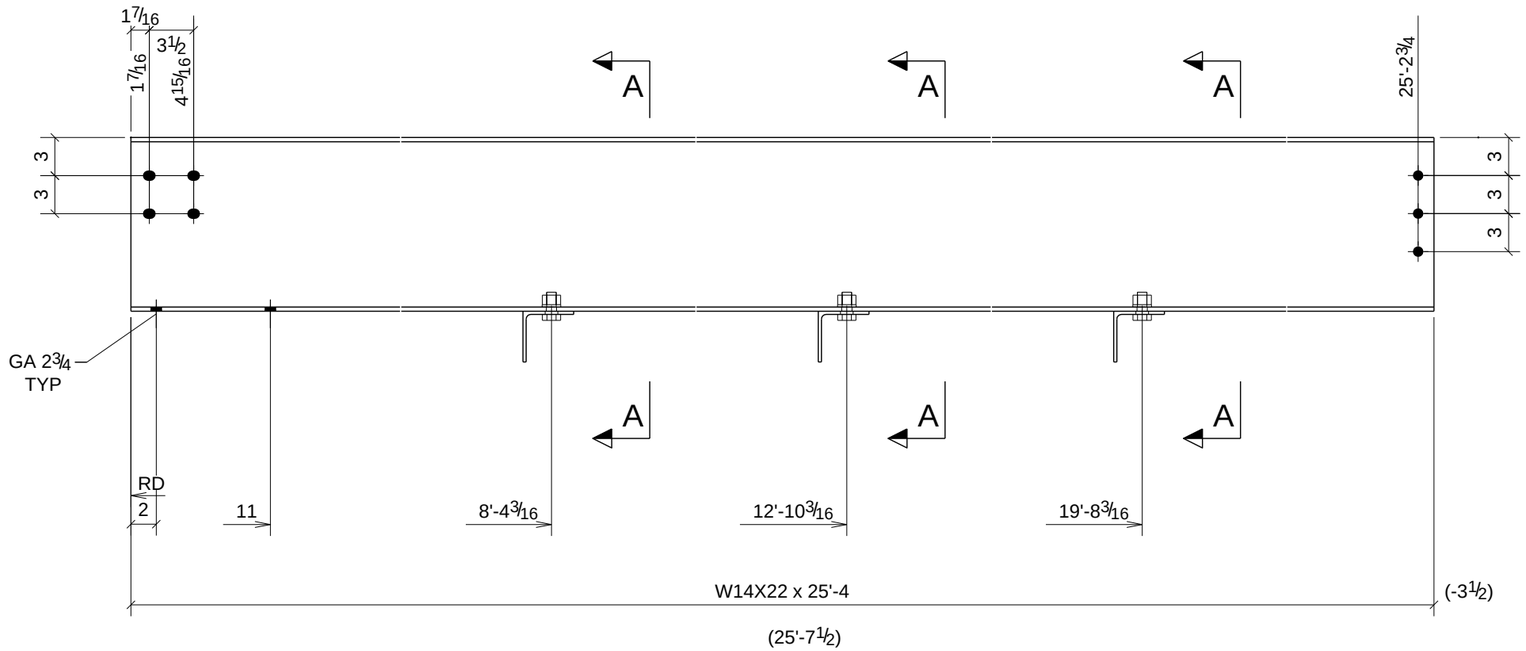

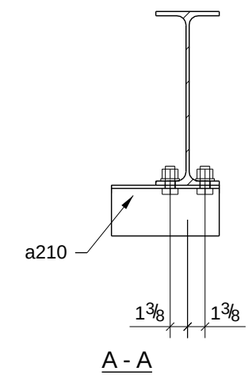

ONE - BEAM - B88

W	13 11/16" x 1/4"
F	5" x 5/16"

PROCESS CONTROL
PROCESS BY
FAB: _____
FIT AND WELD: _____
INSPECTION: _____
OTHER (IF NEEDED) _____
_____ : _____
_____ : _____
_____ : _____
_____ : _____
_____ : _____
REFERENCE LATEST ERECTION DRAWINGS FOR MATERIAL & FABRICATION INFORMATION

BILL OF MATERIAL

Qty Ea.	Qty Tot	Piece Mark	Description	Length	Weight Total	Remarks	Adv Mill #	Steel Grade
	1	B88	BEAM					
	1		W14X22	25'-4"	559	SQ-2		A992
	3	a210	L4X4X1/4	0'-8 1/2"	14			A36
	6		3/4"Ø A325N BOLT	0'-1 3/4"	3			

STEEL ASTM	A992		UNO
ELECTRODES	E70XX L.H.		UNO
WELDS	1/4" FILLET		UNO
OPEN HOLES	13/16" UNO	FINISH	PER SPECS
BOLTS	3/4" A325N		UNO
PAINT	1 S/C STD PRIMER U.N.O.		UNO

PROJECT NAME
OLDE ORCHARD ELEMENTARY SCHOOL
LOCATION
800 McNAUGHTEN RD. COLUMBUS, OHIO 43213
CONTRACTOR
THOMAS AND MARKER CONSTRUCTION
ARCHITECT
BRAUN & STEIDL

DATE	NO.	DESCRIPTION	BY
5/28/11	B	For Checking	TMc
5/16/11	A	For Approval	TMc

North Central Fabrication, Ltd.
NORTH CENTRAL FABRICATION
Mansfield, OH 44906
419-529-2744 FAX 419-529-5387 http://www.northcentralfab
AISC CERTIFIED FABRICATOR

DESCRIPTION	DATE	DATE	JOB No.
BEAM	05/14/2011		70234
	DRAWN BY TMc	CHECKED BY TAN	DRG No. B88

PHASE				
1	2	3	4	5
1	0	0	0	0

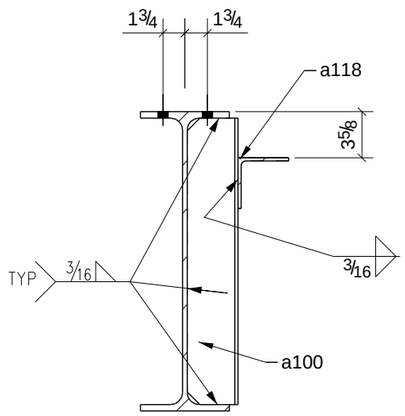

A - A

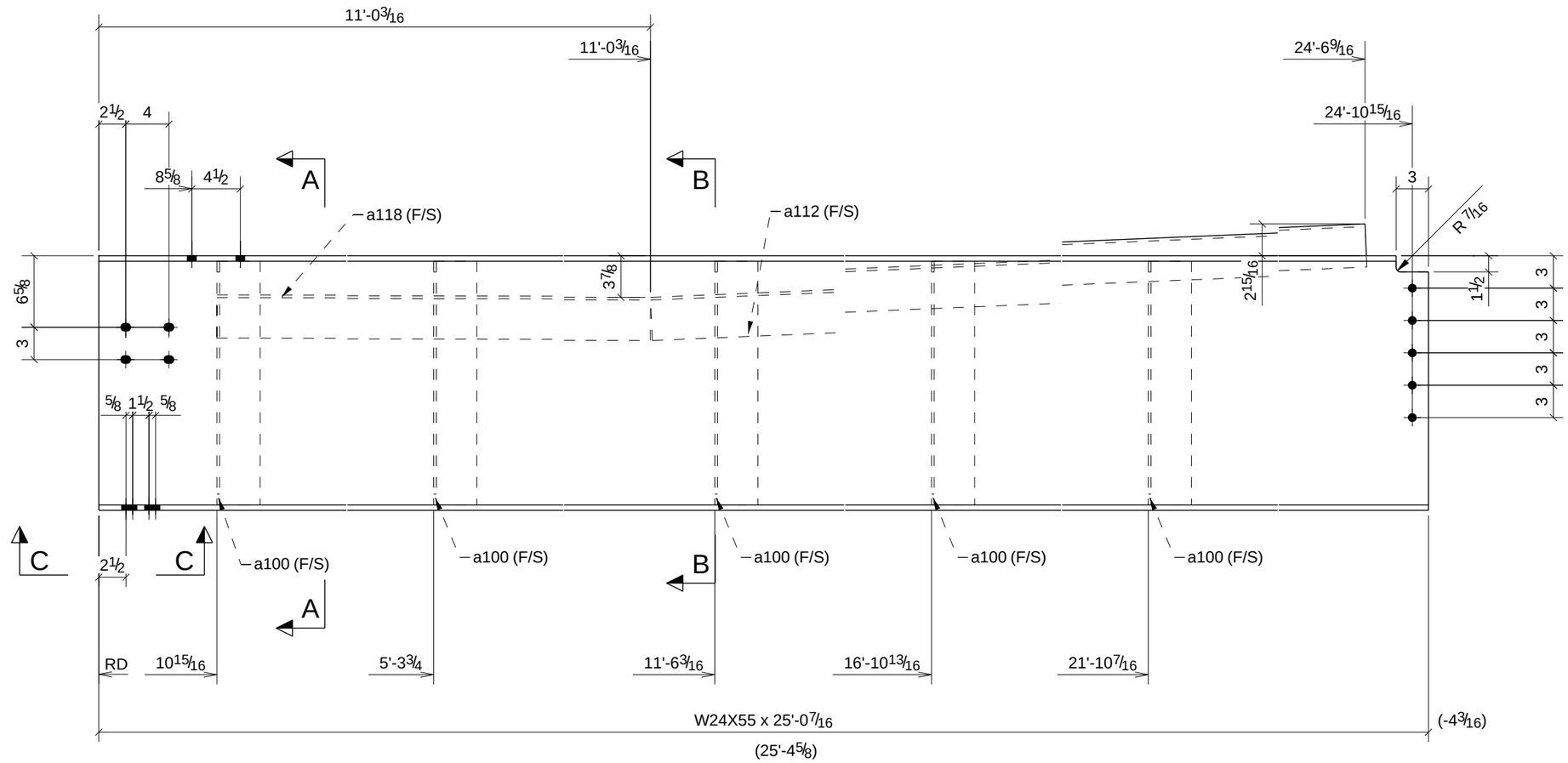

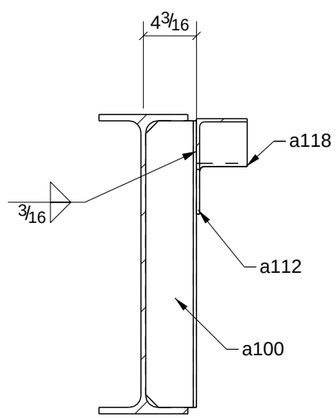

B - B

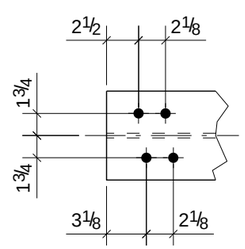

C - C

ONE - BEAM - B89

PROCESS CONTROL
PROCESS BY
FAB:
FIT AND WELD:
INSPECTION:
OTHER (IF NEEDED)
REFERENCE LATEST ERECTION DRAWINGS FOR MATERIAL & FABRICATION INFORMATION

BILL OF MATERIAL

Qty Ea.	Qty Tot	Piece Mark	Description	Length	Weight Total	Remarks	Adv Mill #	Steel Grade
	1	B89	BEAM					
	1		W24X55	25'-0 7/16"	1380	SQ-2		A992
	5	a100	L4X4X1/4	1'-10 9/16"	62			A36
	1	a112	L4X4X1/4	13'-6 7/16"	89			A36
	1	a118	L4X4X1/4	10'-1 1/4"	67			A36

W	23 5/8" x 3/8"	
F	7" x 1/2"	

DATE	NO.	DESCRIPTION	BY
5/28/11	B	For Checking	TMc
5/16/11	A	For Approval	TMc

STEEL ASTM	A992	UNO
ELECTRODES	E70XX L.H.	UNO
WELDS	1/4" FILLET	UNO
OPEN HOLES	13/16" UNO	FINISH PER SPECS
BOLTS	3/4" A325N	UNO
PAINT	1 S/C STD PRIMER U.N.O.	UNO

PROJECT NAME
OLDE ORCHARD ELEMENTARY SCHOOL

LOCATION
800 McNAUGHTEN RD. COLUMBUS, OHIO 43213

CONTRACTOR
THOMAS AND MARKER CONSTRUCTION

ARCHITECT
BRAUN & STEIDL

North Central Fabrication, Ltd.
NORTH CENTRAL FABRICATION
Mansfield, OH 44906
419-529-2744 FAX 419-529-5387 http://www.northcentralfab
AISC CERTIFIED FABRICATOR

DESCRIPTION	DATE	DATE	JOB No.
BEAM	05/14/2011		70234
	DRAWN BY TMc	CHECKED BY TAN	DRG No. B89

PHASE				
1	2	3	4	5
1	0	0	0	0

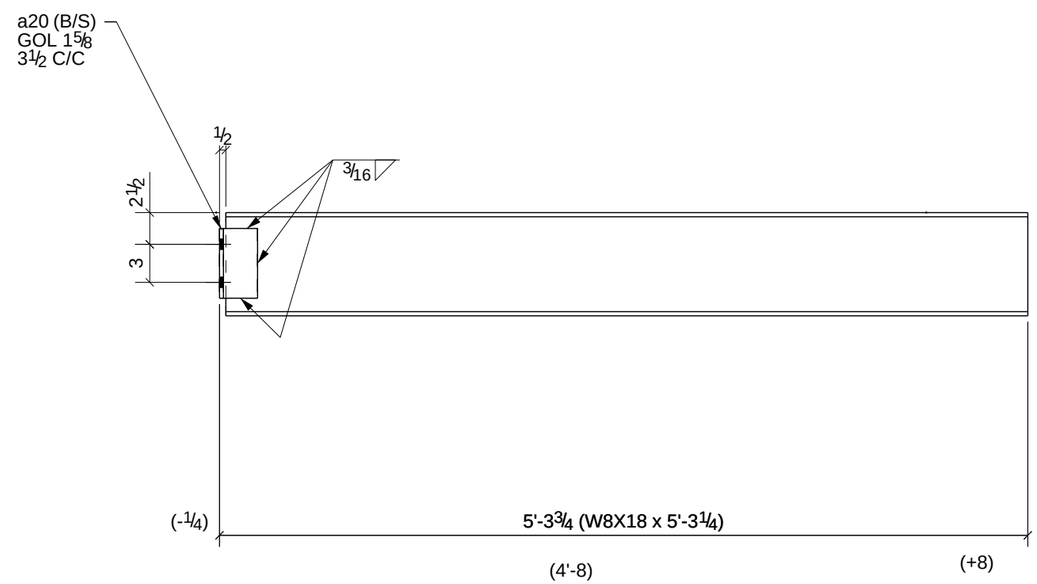

PROCESS CONTROL
PROCESS BY
FAB: _____
FIT AND WELD: _____
INSPECTION: _____
OTHER (IF NEEDED) _____
_____ : _____
_____ : _____
_____ : _____
_____ : _____
REFERENCE LATEST ERECTION DRAWINGS FOR MATERIAL & FABRICATION INFORMATION

ONE - BEAM - B91

W	8 1/8" x 1/4"
F	5 1/4" x 5/16"

DATE	NO.	DESCRIPTION	BY
5/28/11	B	For Checking	TMc
5/16/11	A	For Approval	TMc

BILL OF MATERIAL

Qty Ea.	Qty Tot	Piece Mark	Description	Length	Weight Total	Remarks	Adv Mill #	Steel Grade
	1	B91	BEAM					
	1		W8X18	5'-3 1/4"	94	SQ-2		A992
	2	a20	L3X3X5/16	0'-5 1/2"	6			A36

STEEL ASTM	A992	UNO
ELECTRODES	E70XX L.H.	UNO
WELDS	1/4" FILLET	UNO
OPEN HOLES	13/16" UNO	FINISH PER SPECS
BOLTS	3/4" A325N	UNO
PAINT	1 S/C STD PRIMER U.N.O.	UNO

PROJECT NAME
OLDE ORCHARD ELEMENTARY SCHOOL

LOCATION
800 McNAUGHTEN RD. COLUMBUS, OHIO 43213

CONTRACTOR
THOMAS AND MARKER CONSTRUCTION

ARCHITECT
BRAUN & STEIDL

North Central Fabrication, Ltd.
NORTH CENTRAL FABRICATION
Mansfield, OH 44906
419-529-2744 FAX 419-529-5387 http://www.northcentralfab
AISC CERTIFIED FABRICATOR

DESCRIPTION	DATE	DATE	JOB No.
BEAM	05/14/2011		70234
	DRAWN BY TMc	CHECKED BY TAN	DRG No. B91

PHASE				
1	2	3	4	5
3	0	0	0	0

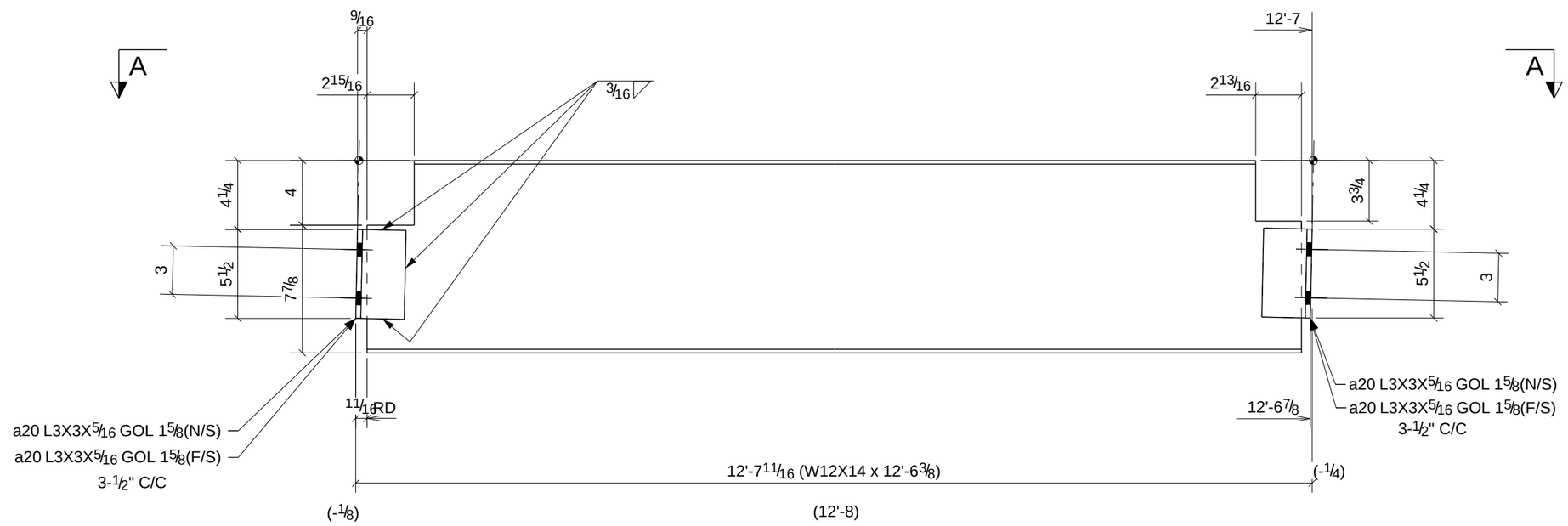

PROCESS CONTROL
PROCESS BY
FAB: _____
FIT AND WELD: _____
INSPECTION: _____
OTHER (IF NEEDED) _____
_____ : _____
_____ : _____
_____ : _____
_____ : _____
REFERENCE LATEST ERECTION DRAWINGS FOR MATERIAL & FABRICATION INFORMATION

3 - BEAMS - B92

W	11 7/8" x 3/16"
F	4" x 1/4"

DATE	NO.	DESCRIPTION	BY
5/28/11	B	For Checking	TMc
5/16/11	A	For Approval	TMc

BILL OF MATERIAL

Qty Ea.	Qty Tot	Piece Mark	Description	Length	Weight Total	Remarks	Adv Mill #	Steel Grade
	3	B92	BEAMS					
	3		W12X14	12'-6 3/8"	532	SQ-2		A992
	12	a20	L3X3X5/16	0'-5 1/2"	33			A36

STEEL ASTM	A992	UNO
ELECTRODES	E70XX L.H.	UNO
WELDS	1/4" FILLET	UNO
OPEN HOLES	13/16" UNO	FINISH PER SPECS
BOLTS	3/4" A325N	UNO
PAINT	1 S/C STD PRIMER U.N.O.	UNO

PROJECT NAME
OLDE ORCHARD ELEMENTARY SCHOOL

LOCATION
800 McNAUGHTEN RD. COLUMBUS, OHIO 43213

CONTRACTOR
THOMAS AND MARKER CONSTRUCTION

ARCHITECT
BRAUN & STEIDL

North Central Fabrication, Ltd.
NORTH CENTRAL FABRICATION
Mansfield, OH 44906
419-529-2744 FAX 419-529-5387 http://www.northcentralfab
AISC CERTIFIED FABRICATOR

DESCRIPTION	DATE	DATE	JOB No.
BEAM	05/14/2011		70234
	DRAWN BY TMc	CHECKED BY TAN	DRG No. B92

PHASE				
1	2	3	4	5
1	0	0	0	0

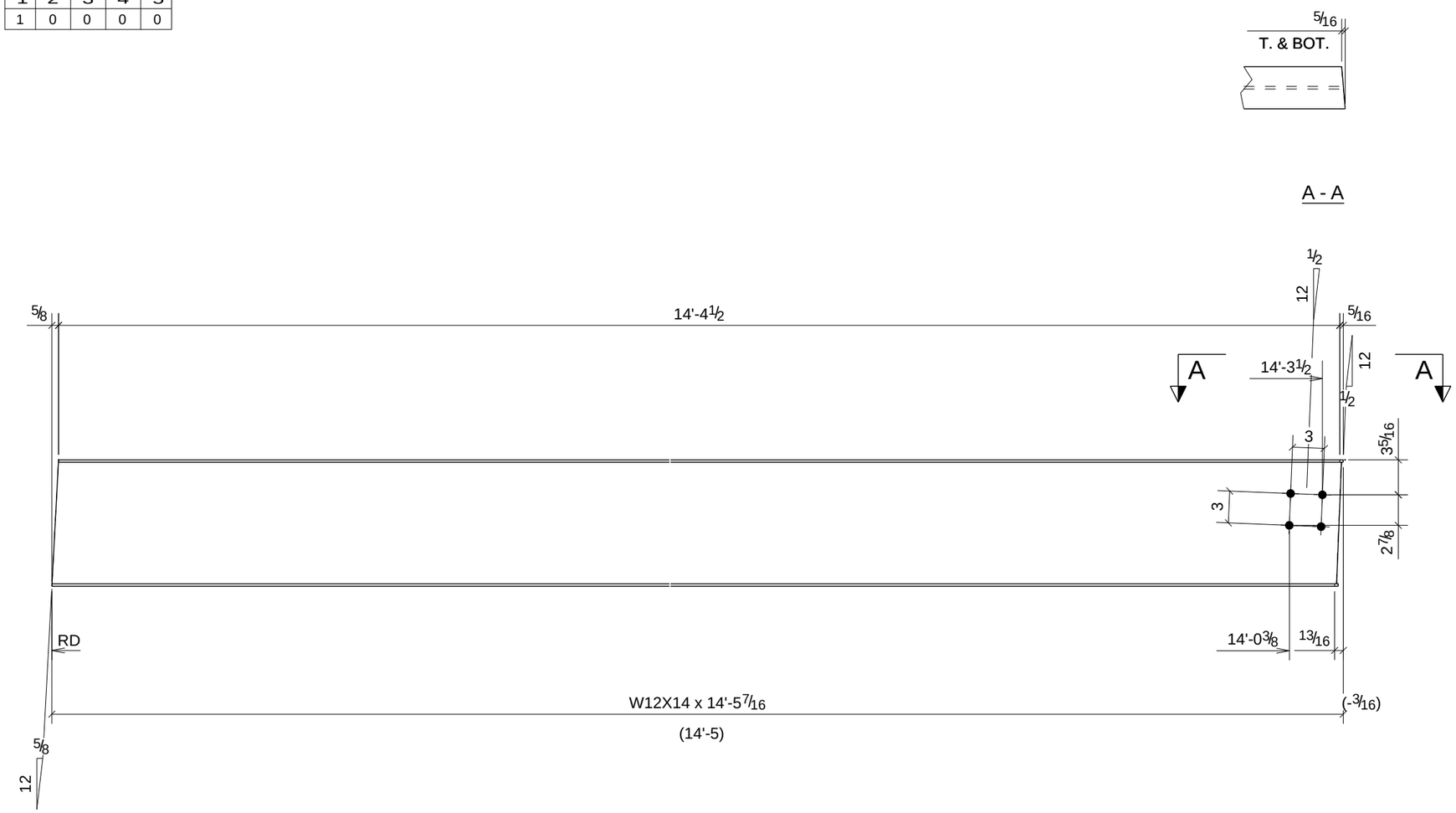

PROCESS CONTROL
PROCESS BY
FAB: _____
FIT AND WELD: _____
INSPECTION: _____
OTHER (IF NEEDED) _____
_____ : _____
_____ : _____
_____ : _____
_____ : _____
REFERENCE LATEST ERECTION DRAWINGS FOR MATERIAL & FABRICATION INFORMATION

ONE - BEAM - B93

W	11 7/8" x 3/16"
F	4" x 1/4"

DATE	NO.	DESCRIPTION	BY
5/28/11	B	For Checking	TMc
5/16/11	A	For Approval	TMc

BILL OF MATERIAL

Qty Ea.	Qty Tot	Piece Mark	Description	Length	Weight Total	Remarks	Adv Mill #	Steel Grade
	1	B93	BEAM					
	1		W12X14	14'-5 7/16"	205	BEV-2		A992

STEEL ASTM	A992	UNO
ELECTRODES	E70XX L.H.	UNO
WELDS	1/4" FILLET	UNO
OPEN HOLES	13/16" UNO	FINISH PER SPECS
BOLTS	3/4" A325N	UNO
PAINT	1 S/C STD PRIMER U.N.O.	UNO

PROJECT NAME
OLDE ORCHARD ELEMENTARY SCHOOL

LOCATION
800 McNAUGHTEN RD. COLUMBUS, OHIO 43213

CONTRACTOR
THOMAS AND MARKER CONSTRUCTION

ARCHITECT
BRAUN & STEIDL

North Central Fabrication, Ltd.
NORTH CENTRAL FABRICATION
Mansfield, OH 44906
419-529-2744 FAX 419-529-5387 http://www.northcentralfab
AISC CERTIFIED FABRICATOR

DESCRIPTION	DATE	DATE	JOB No.
BEAM	05/14/2011		70234
	DRAWN BY TMc	CHECKED BY TAN	DRG No. B93

PHASE				
1	2	3	4	5
1	0	0	0	0

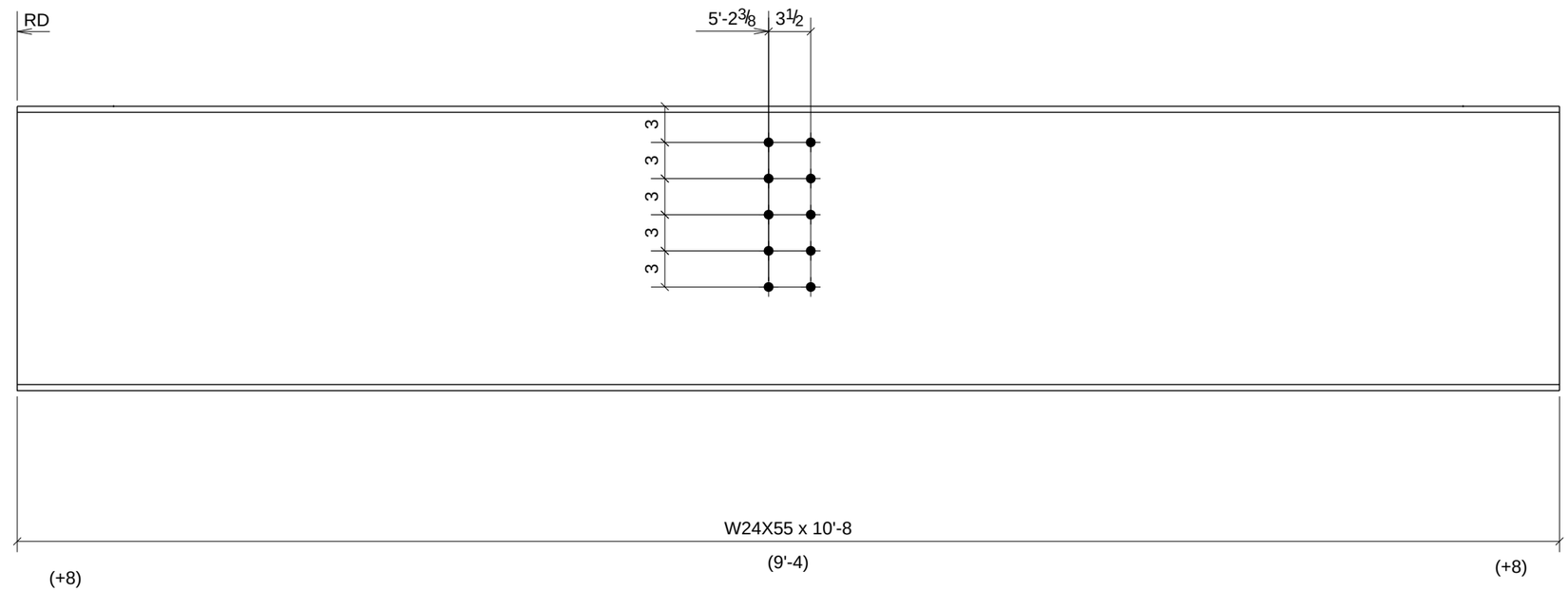

PROCESS CONTROL
PROCESS BY
FAB: _____
FIT AND WELD: _____
INSPECTION: _____
OTHER (IF NEEDED)
_____ : _____
_____ : _____
_____ : _____
_____ : _____
REFERENCE LATEST ERECTION DRAWINGS FOR MATERIAL & FABRICATION INFORMATION

ONE - BEAM - B94

W	23 5/8" x 3/8"
F	7" x 1/2"

DATE	NO.	DESCRIPTION	BY
5/28/11	B	For Checking	TMc
5/16/11	A	For Approval	TMc

BILL OF MATERIAL

Qty Ea.	Qty Tot	Piece Mark	Description	Length	Weight Total	Remarks	Adv Mill #	Steel Grade
	1	B94	BEAM					
	1		W24X55	10'-8"	588	SQ-2		A992

STEEL ASTM	A992	UNO
ELECTRODES	E70XX L.H.	UNO
WELDS	1/4" FILLET	UNO
OPEN HOLES	13/16" UNO	FINISH PER SPECS
BOLTS	3/4" A325N	UNO
PAINT	1 S/C STD PRIMER U.N.O.	UNO

PROJECT NAME
OLDE ORCHARD ELEMENTARY SCHOOL

LOCATION
800 McNAUGHTEN RD. COLUMBUS, OHIO 43213

CONTRACTOR
THOMAS AND MARKER CONSTRUCTION

ARCHITECT
BRAUN & STEIDL

North Central Fabrication, Ltd.
NORTH CENTRAL FABRICATION
Mansfield, OH 44906
419-529-2744 FAX 419-529-5387 http://www.northcentralfab
AISC CERTIFIED FABRICATOR

DESCRIPTION	DATE	DATE	JOB No.
BEAM	05/14/2011		70234
	DRAWN BY TMc	CHECKED BY TAN	DRG No. B94

PHASE				
1	2	3	4	5
1	0	0	0	0

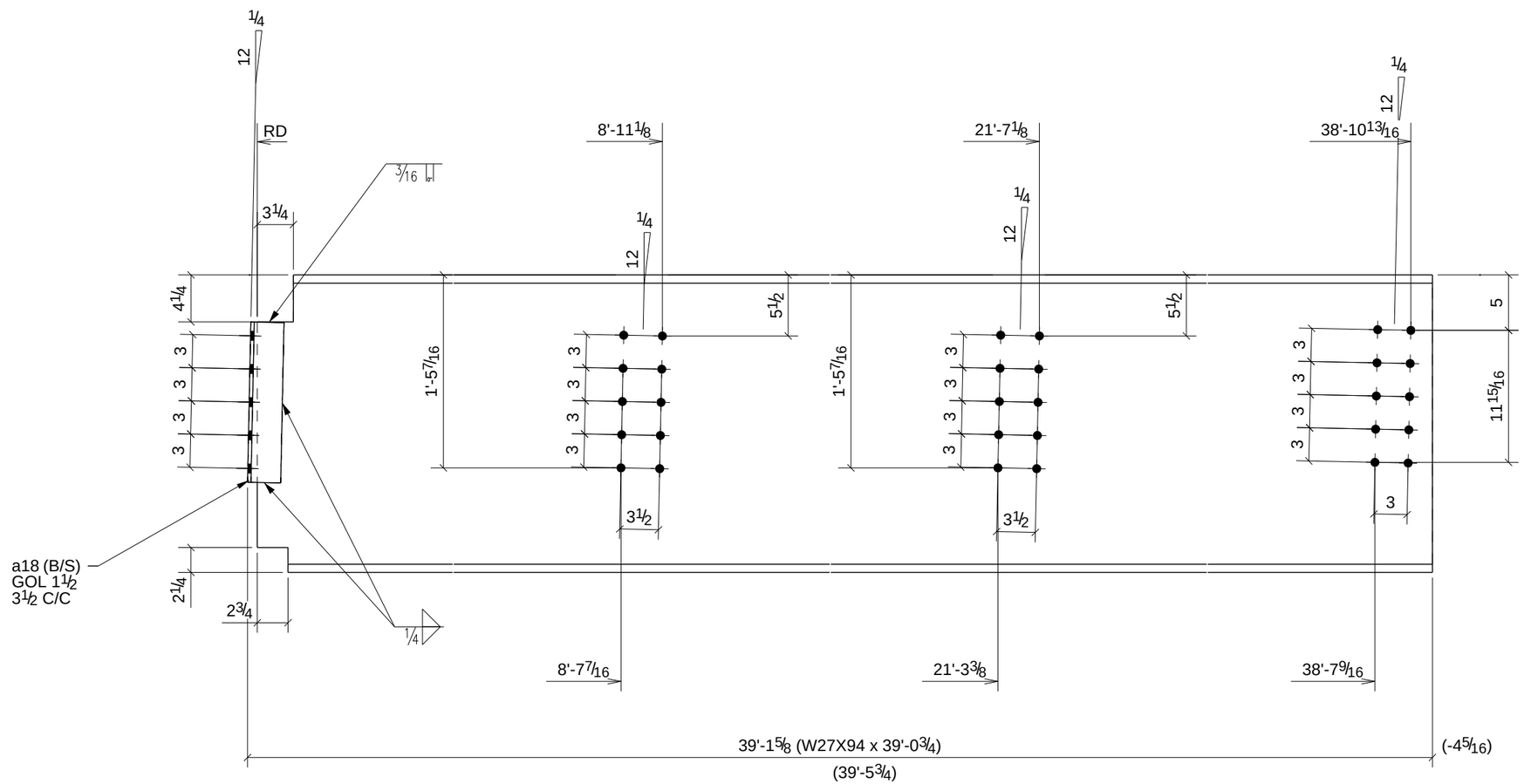

PROCESS CONTROL
PROCESS BY
FAB: _____
FIT AND WELD: _____
INSPECTION: _____
OTHER (IF NEEDED) _____
_____ : _____
_____ : _____
_____ : _____
_____ : _____
REFERENCE LATEST ERECTION DRAWINGS FOR MATERIAL & FABRICATION INFORMATION

ONE - BEAM - B95

W	26 7/8" x 1/2"
F	10" x 3/4"

DATE	NO.	DESCRIPTION	BY
5/28/11	B	For Checking	TMc
5/16/11	A	For Approval	TMc

BILL OF MATERIAL

Qty Ea.	Qty Tot	Piece Mark	Description	Length	Weight Total	Remarks	Adv Mill #	Steel Grade
	1	B95	BEAM					
	1		W27X94	39'-0 3/4"	3683	SQ-2		A992
	2	a18	L3X3X5/16	1'-2 1/2"	15			A36

STEEL ASTM	A992	UNO
ELECTRODES	E70XX L.H.	UNO
WELDS	1/4" FILLET	UNO
OPEN HOLES	13/16" UNO	FINISH PER SPECS
BOLTS	3/4" A325N	UNO
PAINT	1 S/C STD PRIMER U.N.O.	UNO

PROJECT NAME
OLDE ORCHARD ELEMENTARY SCHOOL

LOCATION
800 McNAUGHTEN RD. COLUMBUS, OHIO 43213

CONTRACTOR
THOMAS AND MARKER CONSTRUCTION

ARCHITECT
BRAUN & STEIDL

North Central Fabrication, Ltd.
NORTH CENTRAL FABRICATION
Mansfield, OH 44906
419-529-2744 FAX 419-529-5387 http://www.northcentralfab
AISC CERTIFIED FABRICATOR

DESCRIPTION	DATE	DATE	JOB No.
BEAM	05/14/2011		70234
	DRAWN BY TMc	CHECKED BY TAN	DRG No. B95

PHASE				
1	2	3	4	5
1	0	0	0	0

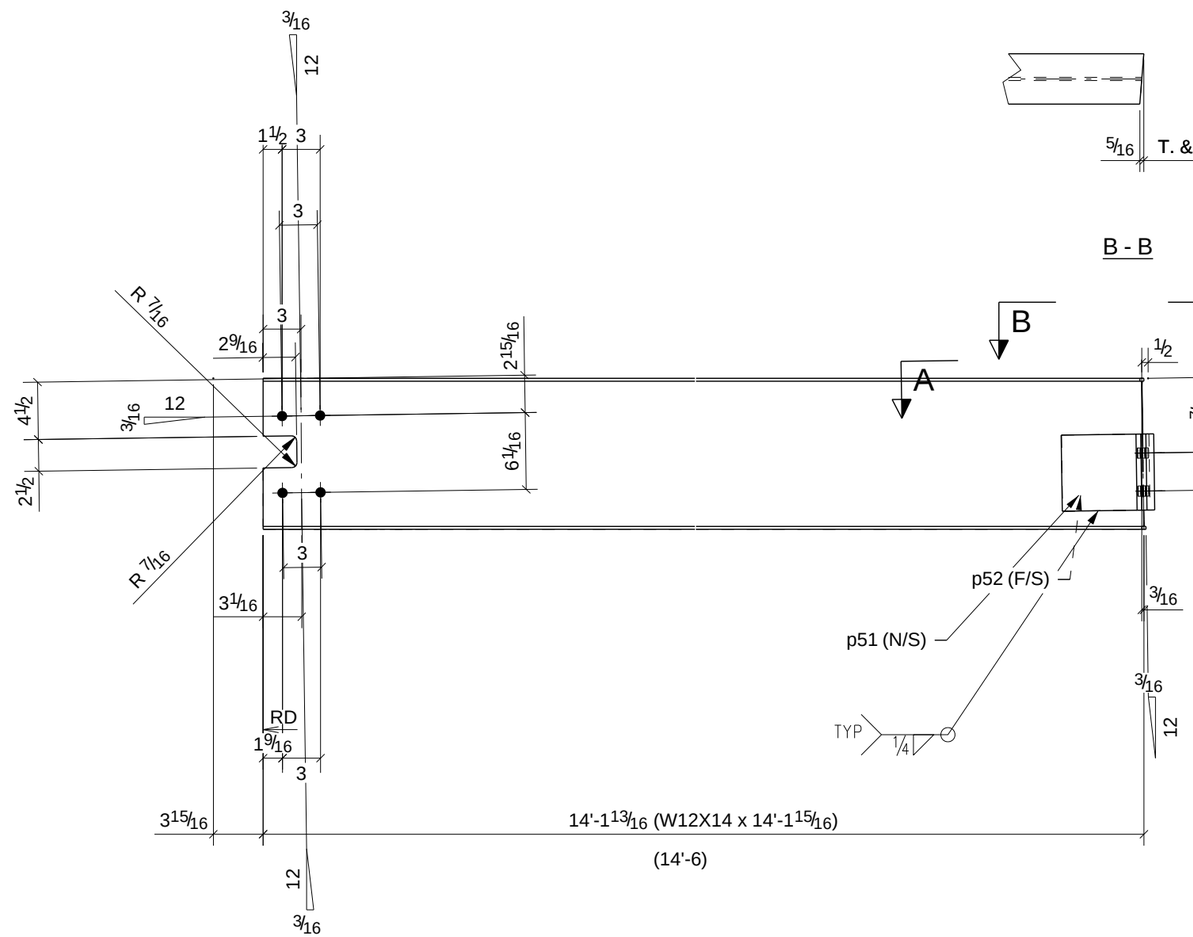

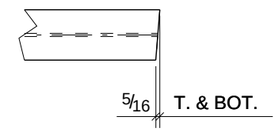

B - B

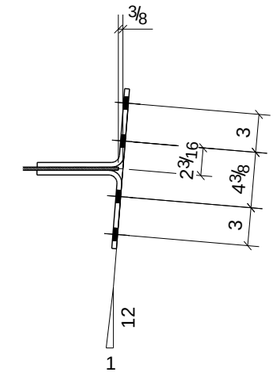

A - A

PROCESS CONTROL
PROCESS BY
FAB: _____
FIT AND WELD: _____
INSPECTION: _____
OTHER (IF NEEDED)
_____ : _____
_____ : _____
_____ : _____
_____ : _____
_____ : _____
REFERENCE LATEST ERECTION DRAWINGS FOR MATERIAL & FABRICATION INFORMATION

ONE - BEAM - B96

W	11 7/8" x 3/16"
F	4" x 1/4"

BILL OF MATERIAL

Qty Ea.	Qty Tot	Piece Mark	Description	Length	Weight Total	Remarks	Adv Mill #	Steel Grade
	1	B96	BEAM					
	1		W12X14	14'-1 15/16"	200	SQ-1/BEV-1		A992
	1	p51	BAR3/8"X6"	1'-0 1/8"	8			A36
	1	p52	BAR3/8"X6"	1'-0 5/16"	8			A36

STEEL ASTM	A992	UNO	
ELECTRODES	E70XX L.H.	UNO	
WELDS	1/4" FILLET	UNO	
OPEN HOLES	13/16"	UNO	FINISH PER SPECS
BOLTS	3/4" A325N	UNO	
PAINT	1 S/C STD PRIMER U.N.O.	UNO	

PROJECT NAME
OLDE ORCHARD ELEMENTARY SCHOOL

LOCATION
800 McNAUGHTEN RD. COLUMBUS, OHIO 43213

CONTRACTOR
THOMAS AND MARKER CONSTRUCTION

ARCHITECT
BRAUN & STEIDL

DATE	NO.	DESCRIPTION	BY
5/28/11	B	For Checking	TMc
5/16/11	A	For Approval	TMc

North Central Fabrication, Ltd.

NORTH CENTRAL FABRICATION
Mansfield, OH 44906
419-529-2744 FAX 419-529-5387 http://www.northcentralfab

AISC CERTIFIED FABRICATOR

DESCRIPTION	DATE	DATE	JOB No.
BEAM	05/14/2011		70234
	DRAWN BY TMc	CHECKED BY TAN	DRG No. B96

PHASE				
1	2	3	4	5
1	0	0	0	0

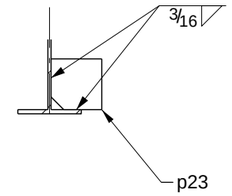

A - A

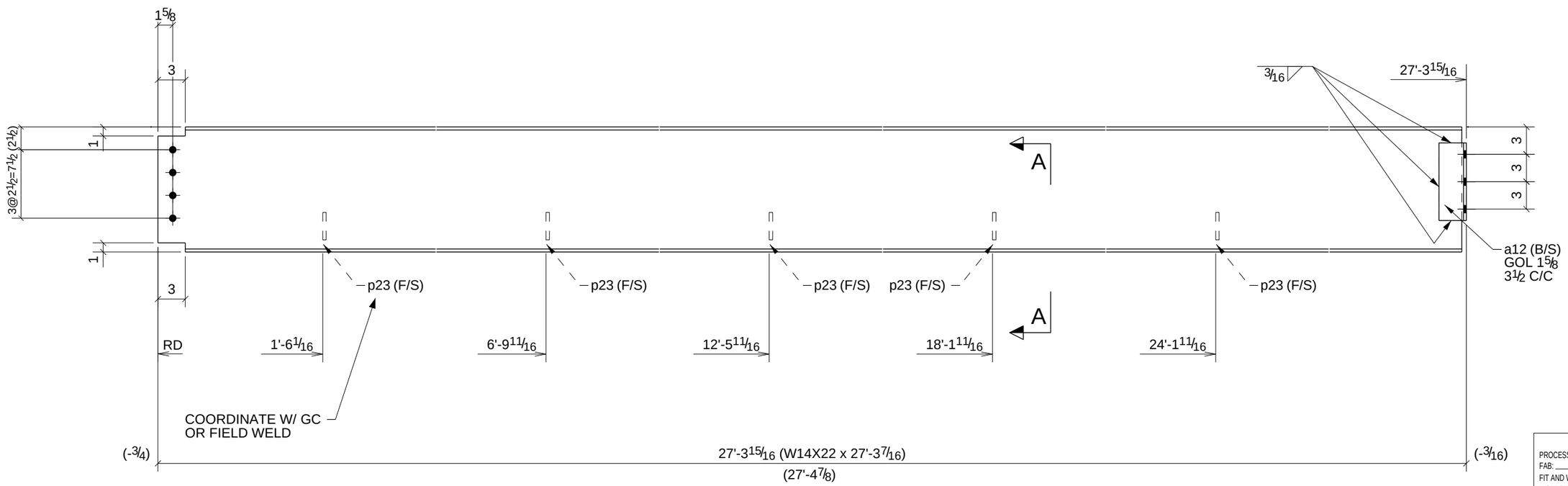

PROCESS CONTROL
PROCESS BY
FAB: _____
FIT AND WELD: _____
INSPECTION: _____
OTHER (IF NEEDED) _____
_____ : _____
_____ : _____
_____ : _____
_____ : _____
REFERENCE LATEST ERECTION DRAWINGS FOR MATERIAL & FABRICATION INFORMATION

ONE - BEAM - B97

W	13 11/16" x 1/4"
F	5" x 5/16"

BILL OF MATERIAL

Qty Ea.	Qty Tot	Piece Mark	Description	Length	Weight Total	Remarks	Adv Mill #	Steel Grade
	1	B97	BEAM					
	1		W14X22	27'-3 7/16"	603	SQ-2		A992
	2	a12	L3X3X5/16	0'-8 1/2"	9			A36
	5	p23	BAR3/8"X4"	0'-4"	8			A36

STEEL ASTM	A992	UNO
ELECTRODES	E70XX L.H.	UNO
WELDS	1/4" FILLET	UNO
OPEN HOLES	13/16" UNO	FINISH PER SPECS
BOLTS	3/4" A325N	UNO
PAINT	1 S/C STD PRIMER U.N.O.	UNO

PROJECT NAME
OLDE ORCHARD ELEMENTARY SCHOOL

LOCATION
800 McNAUGHTEN RD. COLUMBUS, OHIO 43213

CONTRACTOR
THOMAS AND MARKER CONSTRUCTION

ARCHITECT
BRAUN & STEIDL

DATE	NO.	DESCRIPTION	BY
5/28/11	B	For Checking	TMc
5/16/11	A	For Approval	TMc

North Central Fabrication, Ltd.

NORTH CENTRAL FABRICATION
Mansfield, OH 44906
419-529-2744 FAX 419-529-5387 http://www.northcentralfab

AISC CERTIFIED FABRICATOR

DESCRIPTION	DATE	DATE	JOB No.
BEAM	05/14/2011		70234
	DRAWN BY TMc	CHECKED BY TAN	DRG No. B97

PHASE				
1	2	3	4	5
1	0	0	0	0

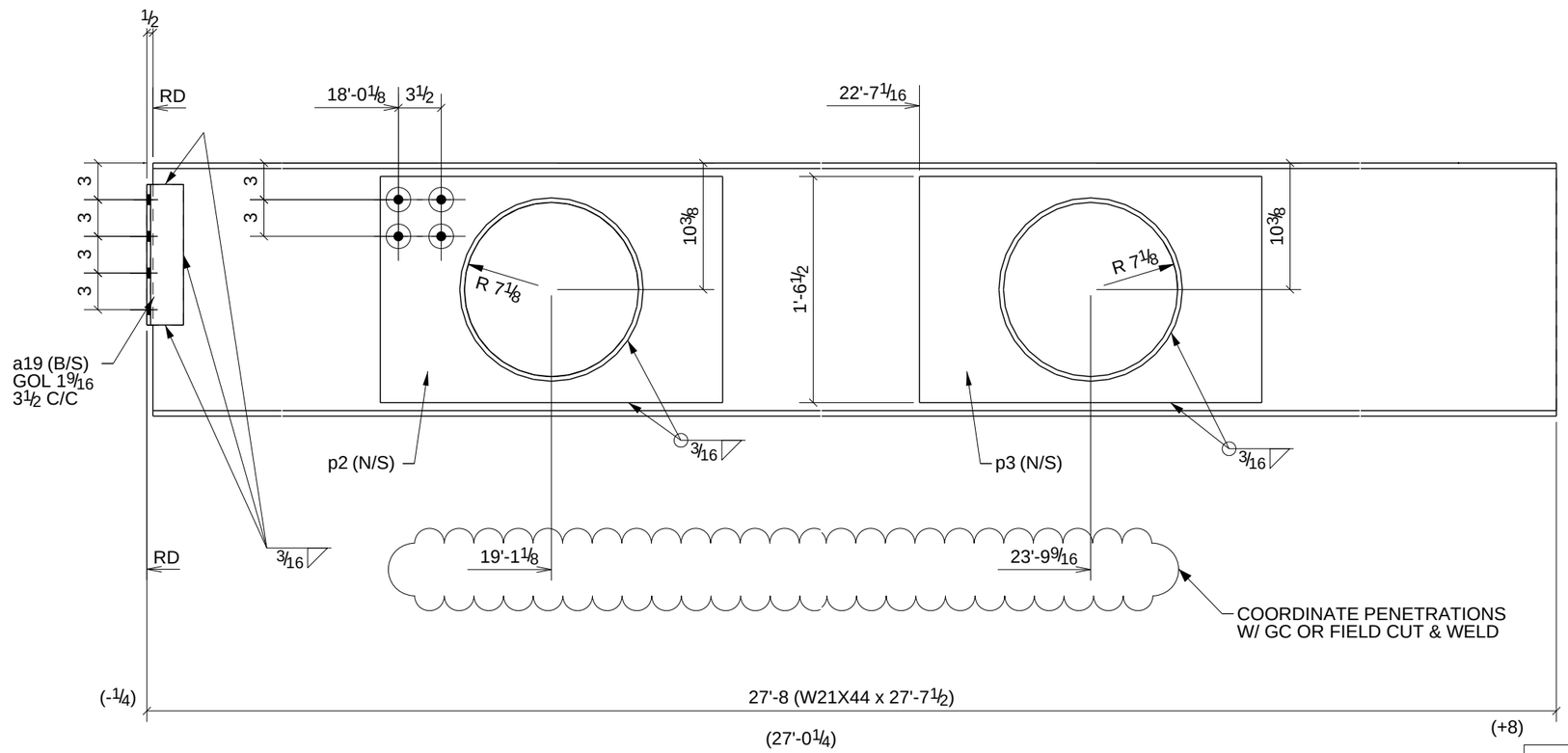

PROCESS CONTROL
PROCESS BY
FAB: _____
FIT AND WELD: _____
INSPECTION: _____
OTHER (IF NEEDED)
_____ : _____
_____ : _____
_____ : _____
_____ : _____
REFERENCE LATEST ERECTION DRAWINGS FOR MATERIAL & FABRICATION INFORMATION

ONE - BEAM - B98

W	20 11/16" x 3/8"
F	6 1/2" x 7/16"

BILL OF MATERIAL

Qty Ea.	Qty Tot	Piece Mark	Description	Length	Weight Total	Remarks	Adv Mill #	Steel Grade
	1	B98	BEAM					
	1		W21X44	27'-7 1/2"	1222	SQ-2		A992
	2	a19	L3X3X5/16	0'-11 1/2"	12			A36
	1	p2	PL1/2"X18 1/2"	2'-4"	49			A36
	1	p3	PL1/2"X18 1/2"	2'-4"	49			A36

STEEL ASTM	A992	UNO	
ELECTRODES	E70XX L.H.	UNO	
WELDS	1/4" FILLET	UNO	
OPEN HOLES	13/16"	UNO	FINISH PER SPECS
BOLTS	3/4" A325N	UNO	
PAINT	1 S/C STD PRIMER U.N.O.	UNO	

PROJECT NAME
OLDE ORCHARD ELEMENTARY SCHOOL

LOCATION
800 McNAUGHTEN RD. COLUMBUS, OHIO 43213

CONTRACTOR
THOMAS AND MARKER CONSTRUCTION

ARCHITECT
BRAUN & STEIDL

DATE	NO.	DESCRIPTION	BY
5/28/11	B	For Checking	TMc
5/16/11	A	For Approval	TMc

North Central Fabrication, Ltd.

NORTH CENTRAL FABRICATION
Mansfield, OH 44906
419-529-2744 FAX 419-529-5387 http://www.northcentralfab

AISC CERTIFIED FABRICATOR

DESCRIPTION: BEAM	DATE: 05/14/2011	DATE:	JOB No. 70234
	DRAWN BY: TMc	CHECKED BY: TAN	DRG No. B98

PHASE				
1	2	3	4	5
1	0	0	0	0

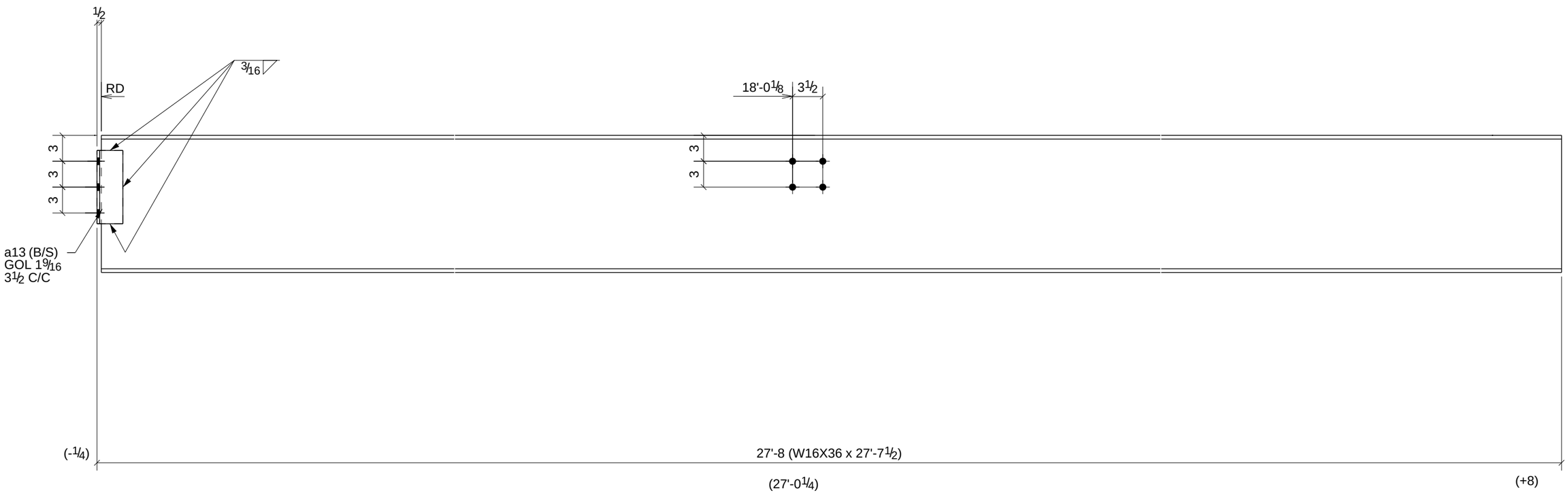

PROCESS CONTROL
PROCESS BY
FAB: _____
FIT AND WELD: _____
INSPECTION: _____
OTHER (IF NEEDED) _____
_____ : _____
_____ : _____
_____ : _____
_____ : _____
REFERENCE LATEST ERECTION DRAWINGS FOR MATERIAL & FABRICATION INFORMATION

ONE - BEAM - B99

W	15 7/8" x 1/4"
F	7" x 7/16"

DATE	NO.	DESCRIPTION	BY
5/28/11	B	For Checking	TMc
5/16/11	A	For Approval	TMc

BILL OF MATERIAL

Qty Ea.	Qty Tot	Piece Mark	Description	Length	Weight Total	Remarks	Adv Mill #	Steel Grade
	1	B99	BEAM					
	1		W16X36	27'-7 1/2"	997	SQ-2		A992
	2	a13	L3X3X5/16	0'-8 1/2"	9			A36

STEEL ASTM	A992	UNO
ELECTRODES	E70XX L.H.	UNO
WELDS	1/4" FILLET	UNO
OPEN HOLES	13/16" UNO	FINISH PER SPECS
BOLTS	3/4" A325N	UNO
PAINT	1 S/C STD PRIMER U.N.O.	UNO

PROJECT NAME
OLDE ORCHARD ELEMENTARY SCHOOL

LOCATION
800 McNAUGHTEN RD. COLUMBUS, OHIO 43213

CONTRACTOR
THOMAS AND MARKER CONSTRUCTION

ARCHITECT
BRAUN & STEIDL

North Central Fabrication, Ltd.
NORTH CENTRAL FABRICATION
Mansfield, OH 44906
419-529-2744 FAX 419-529-5387 http://www.northcentralfab
AISC CERTIFIED FABRICATOR

DESCRIPTION	DATE	DATE	JOB No.
BEAM	05/14/2011		70234
	DRAWN BY TMc	CHECKED BY TAN	DRG No. B99

PHASE				
1	2	3	4	5
1	0	0	0	0

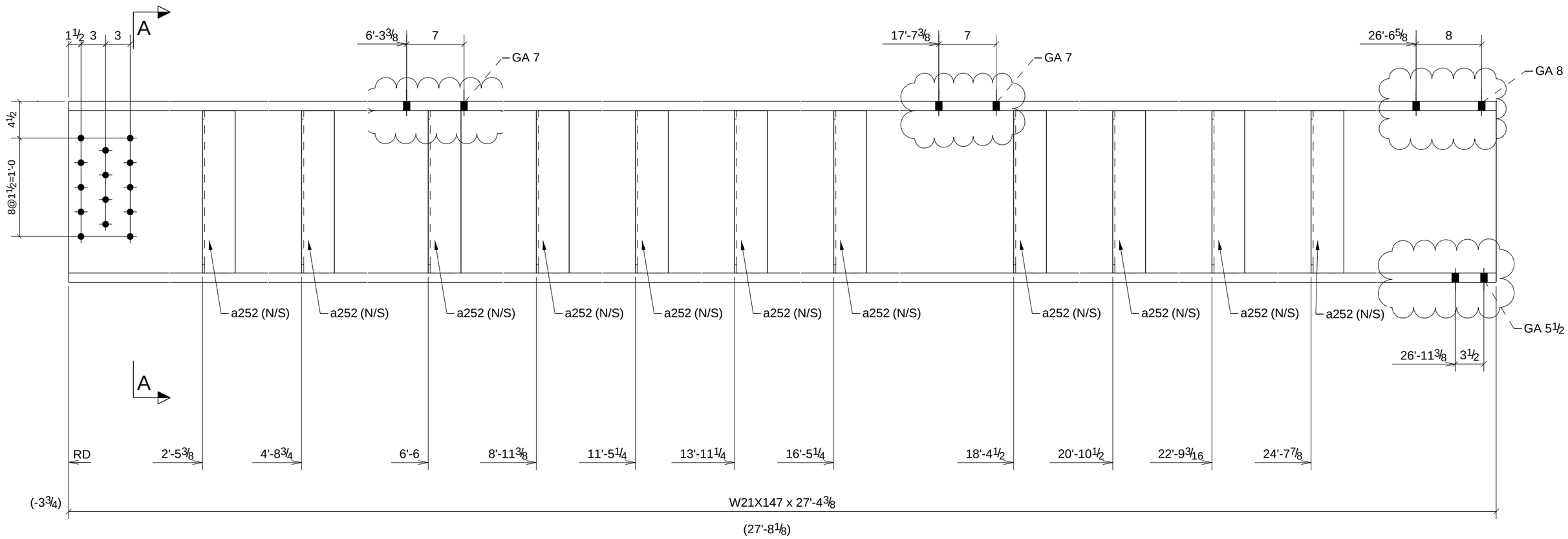

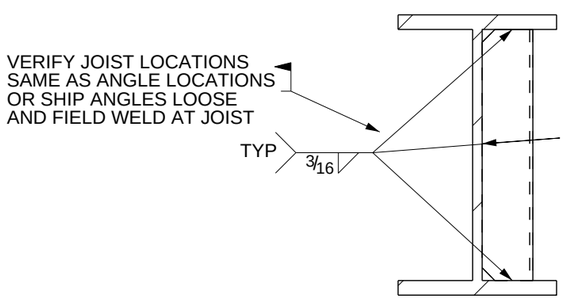

A - A

PROCESS CONTROL
PROCESS BY
FAB: _____
FIT AND WELD: _____
INSPECTION: _____
OTHER (IF NEEDED) _____
REFERENCE LATEST ERECTION DRAWINGS FOR MATERIAL & FABRICATION INFORMATION

ONE - BEAM - B100

W	22 1/8" x 3/4"
F	12 1/2" x 1 1/8"

DATE	NO.	DESCRIPTION	BY
5/28/11	B	For Checking	TMc
5/16/11	A	For Approval	TMc

BILL OF MATERIAL

Qty Ea.	Qty Tot	Piece Mark	Description	Length	Weight Total	Remarks	Adv Mill #	Steel Grade
	1	B100	BEAM					
	1		W21X147	27'-4 3/8"	4023	SQ-2		A992
	11	a252	L4X4X1/4	1'-7 13/16"	120			A36

STEEL ASTM	A992	UNO
ELECTRODES	E70XX L.H.	UNO
WELDS	1/4" FILLET	UNO
OPEN HOLES	13/16" UNO	FINISH PER SPECS
BOLTS	3/4" A325N	UNO
PAINT	1 S/C STD PRIMER U.N.O.	UNO

PROJECT NAME
OLDE ORCHARD ELEMENTARY SCHOOL

LOCATION
800 McNAUGHTEN RD. COLUMBUS, OHIO 43213

CONTRACTOR
THOMAS AND MARKER CONSTRUCTION

ARCHITECT
BRAUN & STEIDL

North Central Fabrication, Ltd.
NORTH CENTRAL FABRICATION
Mansfield, OH 44906
419-529-2744 FAX 419-529-5387 http://www.northcentralfab
AISC CERTIFIED FABRICATOR

DESCRIPTION	DATE	DATE	JOB No.
BEAM	05/14/2011		70234
	DRAWN BY TMc	CHECKED BY TAN	DRG No. B100

PHASE				
1	2	3	4	5
1	0	0	0	0

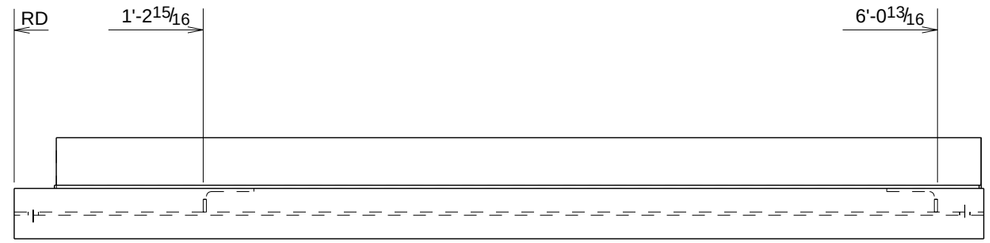

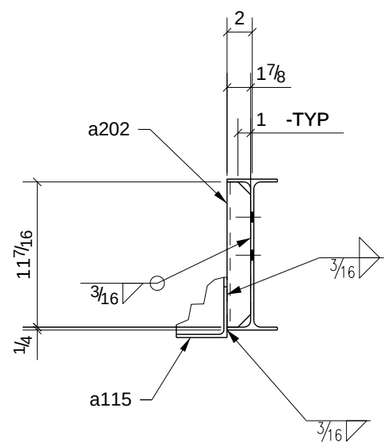

A - A

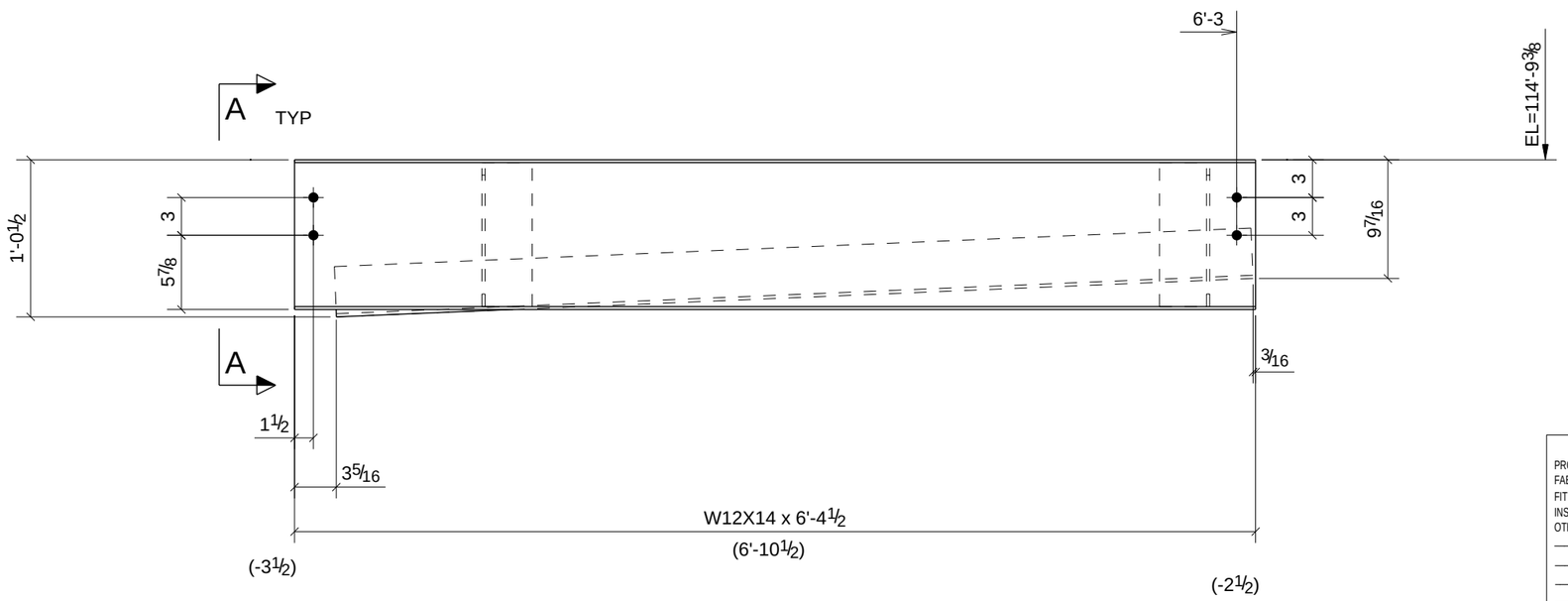

PROCESS CONTROL
PROCESS BY
FAB: _____
FIT AND WELD: _____
INSPECTION: _____
OTHER (IF NEEDED)
_____ : _____
_____ : _____
_____ : _____
_____ : _____
_____ : _____
REFERENCE LATEST ERECTION DRAWINGS FOR MATERIAL & FABRICATION INFORMATION

ONE - BEAM - B101

W	11 7/8" x 3/16"
F	4" x 1/4"

BILL OF MATERIAL

Qty Ea.	Qty Tot	Piece Mark	Description	Length	Weight Total	Remarks	Adv Mill #	Steel Grade
	1	B101	BEAM					
	1		W12X14	6'-4 1/2"	90	SQ-2		A992
	1	a115	L4X4X1/4	6'-1"	40			A36
	2	a202	L4X4X1/4	0'-11 7/16"	13			A36

STEEL ASTM	A992	UNO
ELECTRODES	E70XX L.H.	UNO
WELDS	1/4" FILLET	UNO
OPEN HOLES	13/16" UNO	FINISH PER SPECS
BOLTS	3/4" A325N	UNO
PAINT	1 S/C STD PRIMER U.N.O.	UNO

PROJECT NAME
OLDE ORCHARD ELEMENTARY SCHOOL

LOCATION
800 McNAUGHTEN RD. COLUMBUS, OHIO 43213

CONTRACTOR
THOMAS AND MARKER CONSTRUCTION

ARCHITECT
BRAUN & STEIDL

DATE	NO.	DESCRIPTION	BY
5/28/11	B	For Checking	TMc
5/16/11	A	For Approval	TMc

North Central Fabrication, Ltd.

NORTH CENTRAL FABRICATION
Mansfield, OH 44906
419-529-2744 FAX 419-529-5387 http://www.northcentralfab

AISC CERTIFIED FABRICATOR

DESCRIPTION: BEAM	DATE: 05/14/2011	DATE:	JOB No. 70234
	DRAWN BY: TMc	CHECKED BY: TAN	DRG No. B101

PHASE				
1	2	3	4	5
1	0	0	0	0

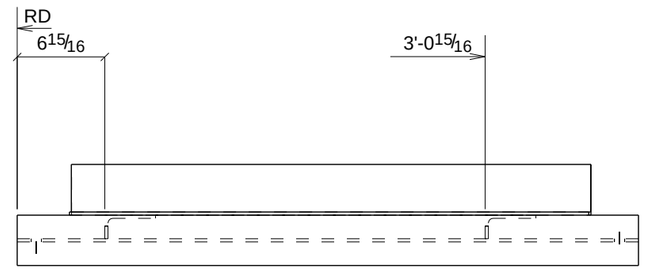

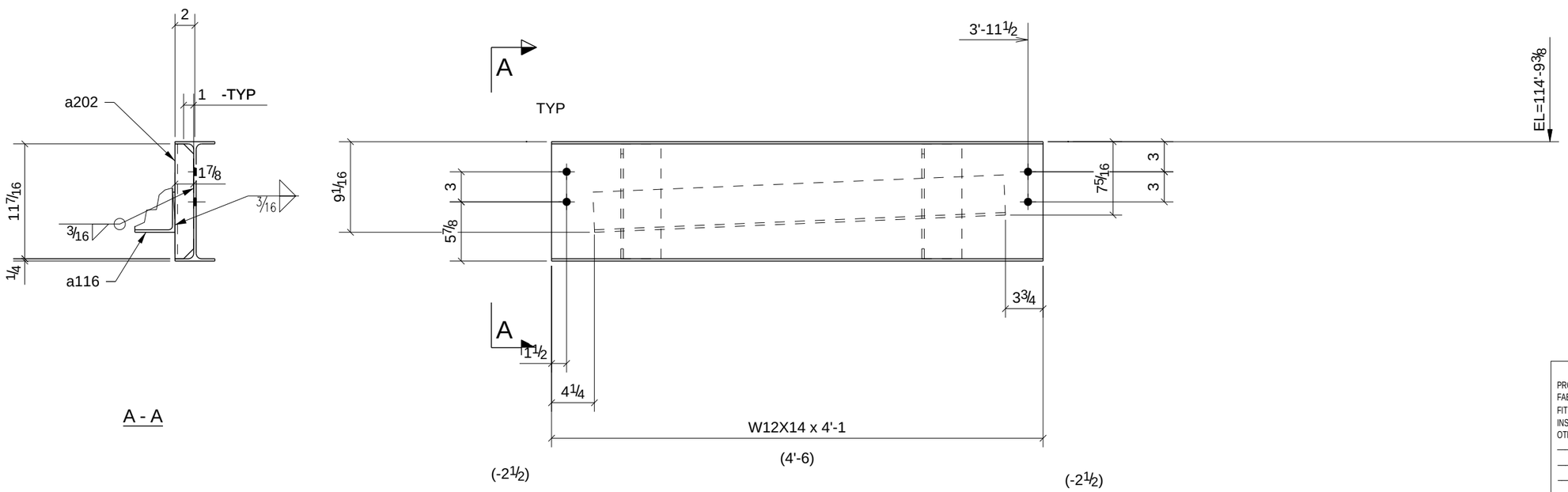

A - A

ONE - BEAM - B102

W	11 7/8" x 3/16"
F	4" x 1/4"

PROCESS CONTROL
PROCESS BY
FAB: _____
FIT AND WELD: _____
INSPECTION: _____
OTHER (IF NEEDED)
_____ : _____
_____ : _____
_____ : _____
_____ : _____
REFERENCE LATEST ERECTION DRAWINGS FOR MATERIAL & FABRICATION INFORMATION

DATE	NO.	DESCRIPTION	BY
5/28/11	B	For Checking	TMc
5/16/11	A	For Approval	TMc

BILL OF MATERIAL

Qty Ea.	Qty Tot	Piece Mark	Description	Length	Weight Total	Remarks	Adv Mill #	Steel Grade
	1	B102	BEAM					
	1		W12X14	4'-1"	58	SQ-2		A992
	1	a116	L4X4X1/4	3'-5"	23			A36
	2	a202	L4X4X1/4	0'-11 7/16"	13			A36

STEEL ASTM	A992	UNO
ELECTRODES	E70XX L.H.	UNO
WELDS	1/4" FILLET	UNO
OPEN HOLES	13/16" UNO	FINISH PER SPECS
BOLTS	3/4" A325N	UNO
PAINT	1 S/C STD PRIMER U.N.O.	UNO

PROJECT NAME
OLDE ORCHARD ELEMENTARY SCHOOL

LOCATION
800 McNAUGHTEN RD. COLUMBUS, OHIO 43213

CONTRACTOR
THOMAS AND MARKER CONSTRUCTION

ARCHITECT
BRAUN & STEIDL

North Central Fabrication, Ltd.

NORTH CENTRAL FABRICATION
Mansfield, OH 44906
419-529-2744 FAX 419-529-5387 http://www.northcentralfab

AISC CERTIFIED FABRICATOR

DESCRIPTION	DATE	DATE	JOB No.
BEAM	05/14/2011		70234
	DRAWN BY TMc	CHECKED BY TAN	DRG No. B102

PHASE				
1	2	3	4	5
1	0	0	0	0

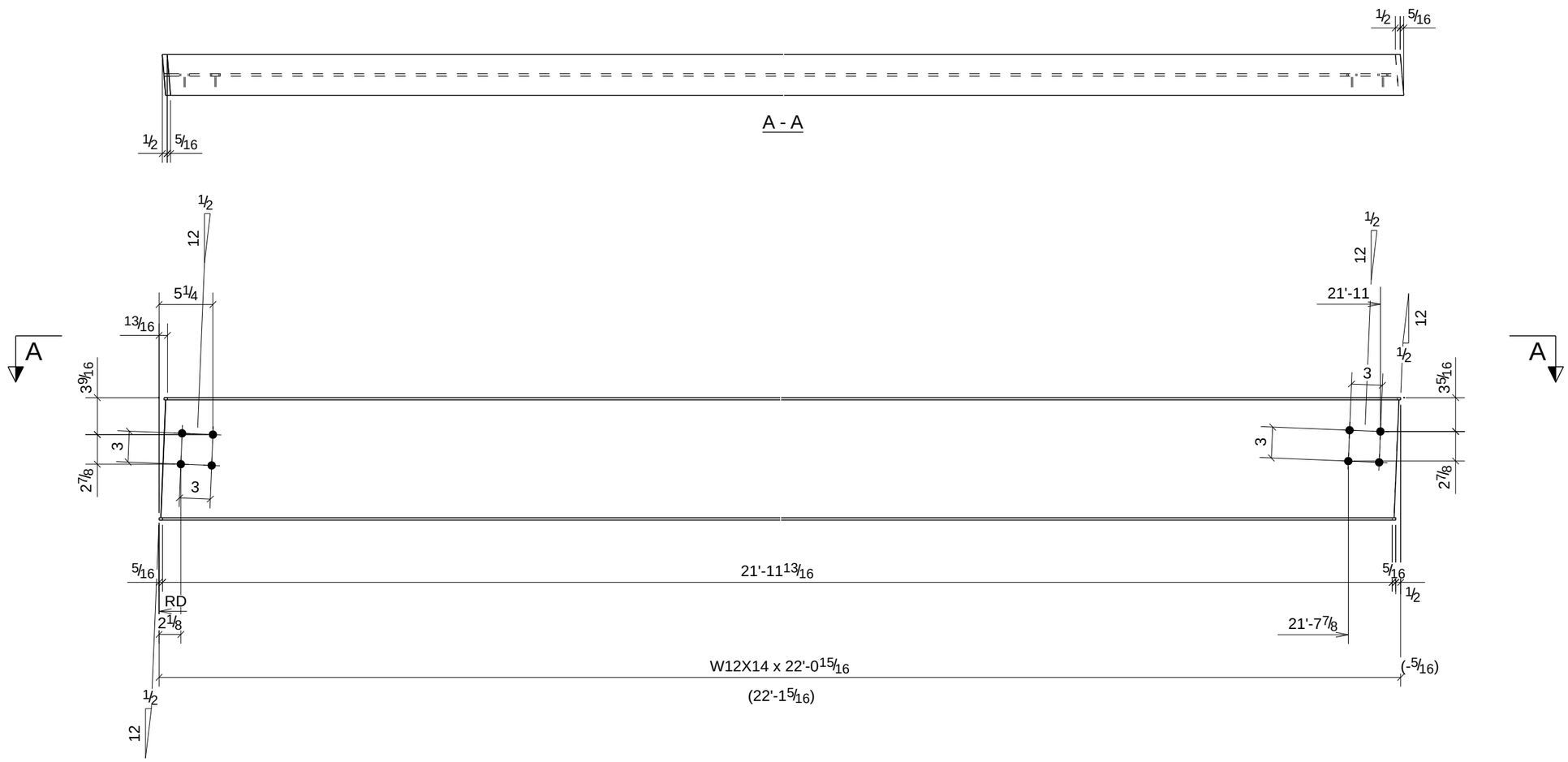

PROCESS CONTROL
PROCESS BY
FAB: _____
FIT AND WELD: _____
INSPECTION: _____
OTHER (IF NEEDED) _____
_____ : _____
_____ : _____
_____ : _____
_____ : _____
REFERENCE LATEST ERECTION DRAWINGS FOR MATERIAL & FABRICATION INFORMATION

ONE - BEAM - B103

W	11 7/8" x 3/16"
F	4" x 1/4"

DATE	NO.	DESCRIPTION	BY
5/28/11	B	For Checking	TMc
5/16/11	A	For Approval	TMc

BILL OF MATERIAL

Qty Ea.	Qty Tot	Piece Mark	Description	Length	Weight Total	Remarks	Adv Mill #	Steel Grade
	1	B103	BEAM					
	1		W12X14	22'-0 15/16"	313	BEV-2		A992

STEEL ASTM	A992	UNO
ELECTRODES	E70XX L.H.	UNO
WELDS	1/4" FILLET	UNO
OPEN HOLES	13/16" UNO	FINISH PER SPECS
BOLTS	3/4" A325N	UNO
PAINT	1 S/C STD PRIMER U.N.O.	UNO

PROJECT NAME
OLDE ORCHARD ELEMENTARY SCHOOL

LOCATION
800 McNAUGHTEN RD. COLUMBUS, OHIO 43213

CONTRACTOR
THOMAS AND MARKER CONSTRUCTION

ARCHITECT
BRAUN & STEIDL

North Central Fabrication, Ltd.
NORTH CENTRAL FABRICATION
Mansfield, OH 44906
419-529-2744 FAX 419-529-5387 http://www.northcentralfab
AISC CERTIFIED FABRICATOR

DESCRIPTION	DATE	DATE	JOB No.
BEAM	05/14/2011		70234
	DRAWN BY TMc	CHECKED BY TAN	DRG No. B103

PHASE				
1	2	3	4	5
2	0	0	0	0

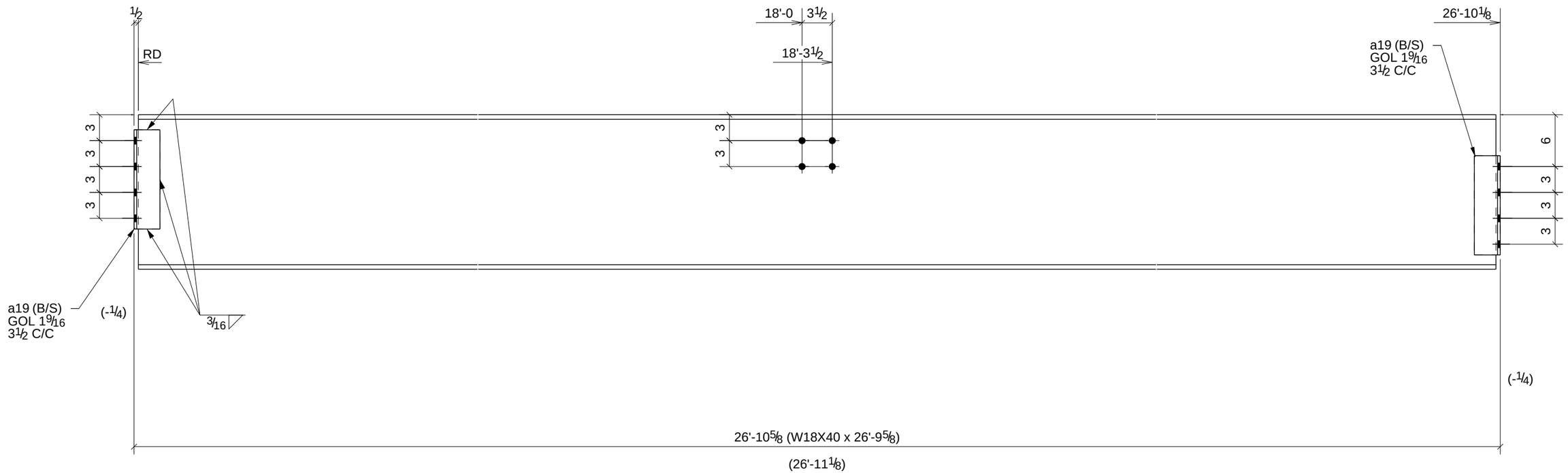

PROCESS CONTROL
PROCESS BY
FAB: _____
FIT AND WELD: _____
INSPECTION: _____
OTHER (IF NEEDED) _____
_____ : _____
_____ : _____
_____ : _____
_____ : _____
REFERENCE LATEST ERECTION DRAWINGS FOR MATERIAL & FABRICATION INFORMATION

2 - BEAMS - B104

W	17 7/8" x 1/4"
F	6" x 1/2"

DATE	NO.	DESCRIPTION	BY
5/28/11	B	For Checking	TMc
5/16/11	A	For Approval	TMc

BILL OF MATERIAL

Qty Ea.	Qty Tot	Piece Mark	Description	Length	Weight Total	Remarks	Adv Mill #	Steel Grade
	2	B104	BEAMS					
	2		W18X40	26'-9 5/8"	2153	SQ-2		A992
	8	a19	L3X3X5/16	0'-11 1/2"	46			A36

STEEL ASTM	A992	UNO
ELECTRODES	E70XX L.H.	UNO
WELDS	1/4" FILLET	UNO
OPEN HOLES	13/16" UNO	FINISH PER SPECS
BOLTS	3/4" A325N	UNO
PAINT	1 S/C STD PRIMER U.N.O.	UNO

PROJECT NAME
OLDE ORCHARD ELEMENTARY SCHOOL

LOCATION
800 McNAUGHTEN RD. COLUMBUS, OHIO 43213

CONTRACTOR
THOMAS AND MARKER CONSTRUCTION

ARCHITECT
BRAUN & STEIDL

North Central Fabrication, Ltd.
NORTH CENTRAL FABRICATION
Mansfield, OH 44906
419-529-2744 FAX 419-529-5387 http://www.northcentralfab
AISC CERTIFIED FABRICATOR

DESCRIPTION	DATE	DATE	JOB No.
BEAM	05/14/2011		70234
	DRAWN BY TMc	CHECKED BY TAN	DRG No. B104

PHASE				
1	2	3	4	5
1	0	0	0	0

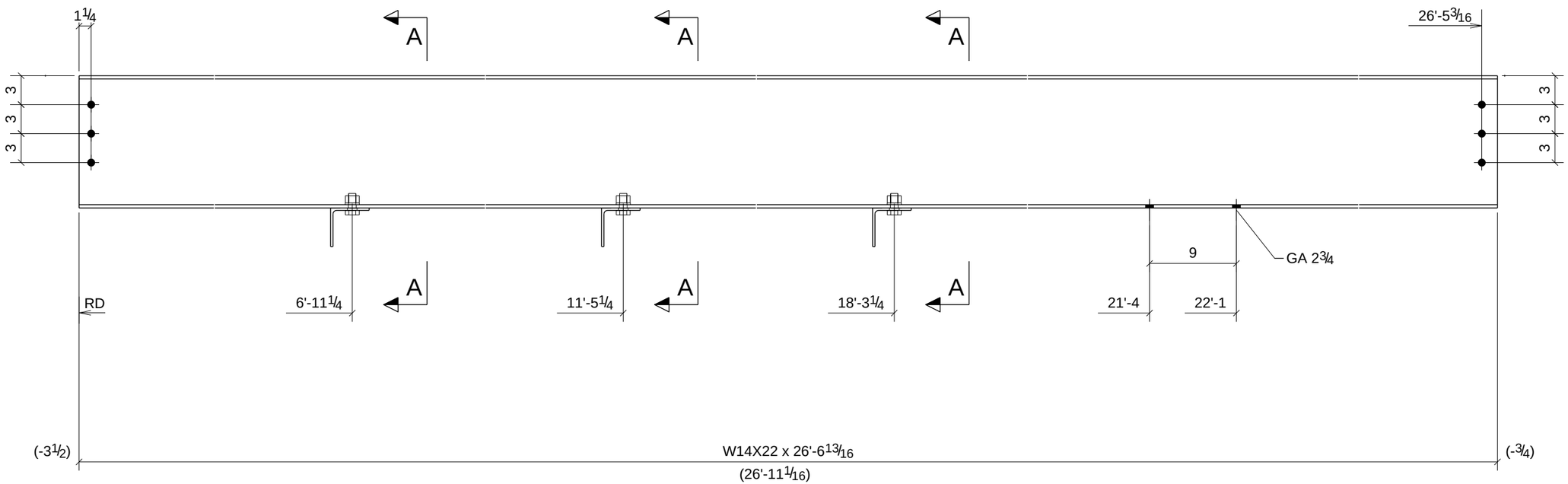

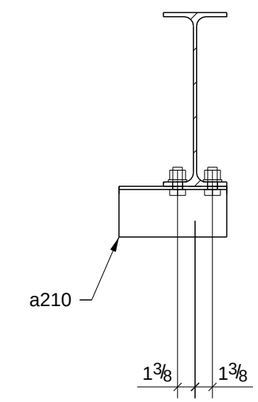

A - A

PROCESS CONTROL
PROCESS BY
FAB: _____
FIT AND WELD: _____
INSPECTION: _____
OTHER (IF NEEDED) _____
_____ : _____
_____ : _____
_____ : _____
_____ : _____
REFERENCE LATEST ERECTION DRAWINGS FOR MATERIAL & FABRICATION INFORMATION

ONE - BEAM - B105

W	13 11/16" x 1/4"
F	5" x 5/16"

BILL OF MATERIAL

Qty Ea.	Qty Tot	Piece Mark	Description	Length	Weight Total	Remarks	Adv Mill #	Steel Grade
	1	B105	BEAM					
	1		W14X22	26'-6 13/16"	587	SQ-2		A992
	3	a210	L4X4X1/4	0'-8 1/2"	14			A36
	6		3/4"Ø A325N BOLT	0'-1 3/4"	3			

STEEL ASTM	A992	UNO
ELECTRODES	E70XX L.H.	UNO
WELDS	1/4" FILLET	UNO
OPEN HOLES	13/16" UNO	FINISH PER SPECS
BOLTS	3/4" A325N	UNO
PAINT	1 S/C STD PRIMER U.N.O.	UNO

PROJECT NAME
OLDE ORCHARD ELEMENTARY SCHOOL

LOCATION
800 McNAUGHTEN RD. COLUMBUS, OHIO 43213

CONTRACTOR
THOMAS AND MARKER CONSTRUCTION

ARCHITECT
BRAUN & STEIDL

DATE	NO.	DESCRIPTION	BY
5/28/11	B	For Checking	TMc
5/16/11	A	For Approval	TMc

North Central Fabrication, Ltd.

NORTH CENTRAL FABRICATION
Mansfield, OH 44906
419-529-2744 FAX 419-529-5387 http://www.northcentralfab

AISC CERTIFIED FABRICATOR

DESCRIPTION: BEAM	DATE: 05/14/2011	DATE	JOB No. 70234
	DRAWN BY: TMc	CHECKED BY: TAN	DRG No. B105

PHASE				
1	2	3	4	5
1	0	0	0	0

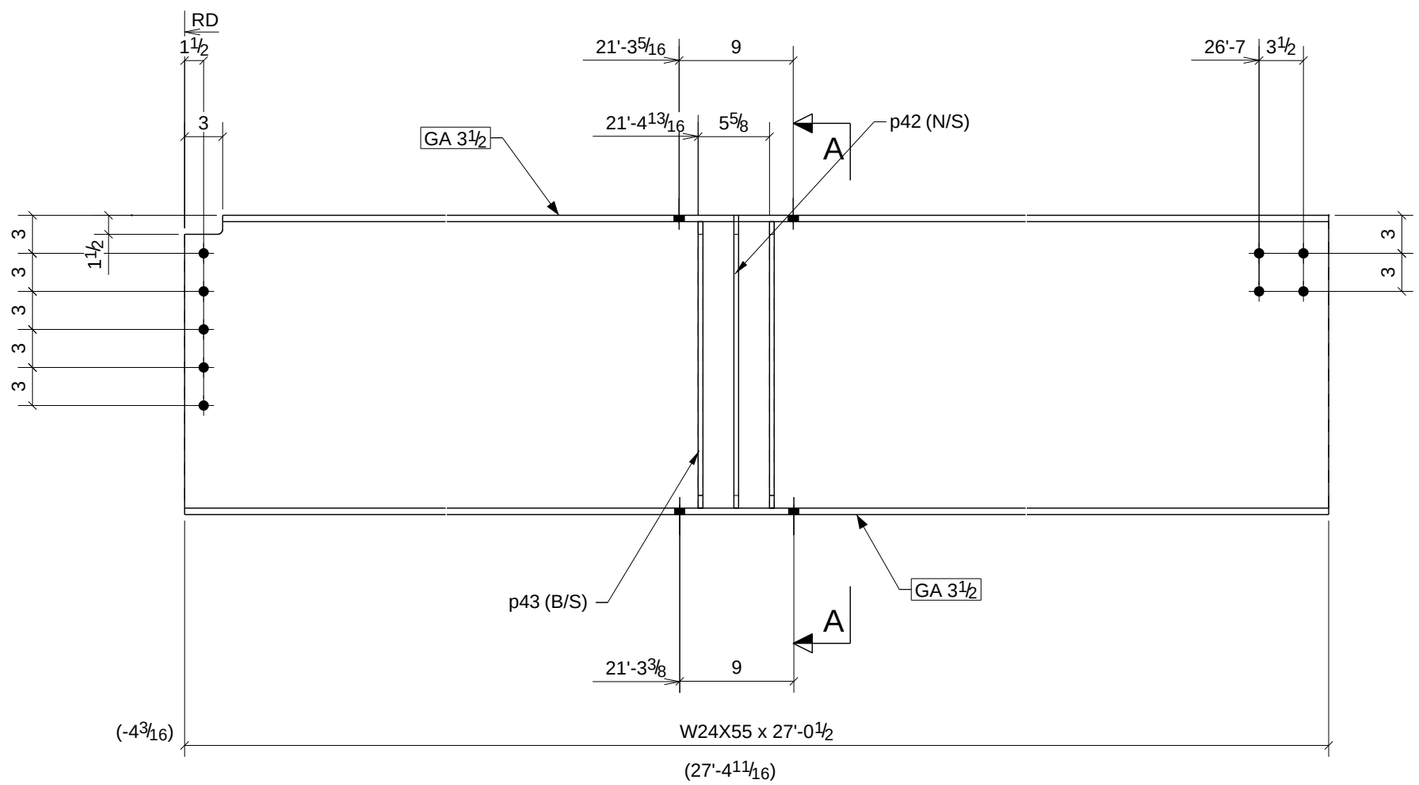

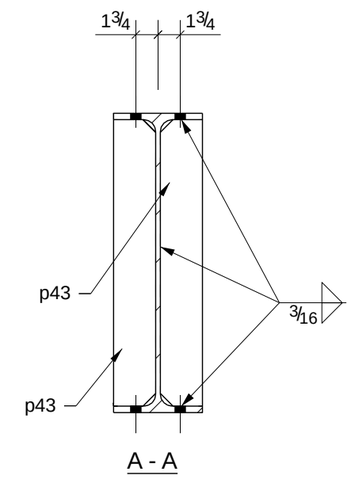

PROCESS CONTROL
PROCESS BY
FAB: _____
FIT AND WELD: _____
INSPECTION: _____
OTHER (IF NEEDED) _____
_____ : _____
_____ : _____
_____ : _____
_____ : _____
REFERENCE LATEST ERECTION DRAWINGS FOR MATERIAL & FABRICATION INFORMATION

ONE - BEAM - B106

W	23 5/8" x 3/8"
F	7" x 1/2"

BILL OF MATERIAL

Qty Ea.	Qty Tot	Piece Mark	Description	Length	Weight Total	Remarks	Adv Mill #	Steel Grade
	1	B106	BEAM					
	1		W24X55	27'-0 1/2"	1491	SQ-2		A992
	1	p42	PL3/8"X5 9/16"	1'-11 1/8"	11			A36
	4	p43	PL3/8"X3 5/16"	1'-10 9/16"	31			A36

STEEL ASTM	A992	UNO
ELECTRODES	E70XX L.H.	UNO
WELDS	1/4" FILLET	UNO
OPEN HOLES	13/16" UNO	FINISH PER SPECS
BOLTS	3/4" A325N	UNO
PAINT	1 S/C STD PRIMER U.N.O.	UNO

PROJECT NAME
OLDE ORCHARD ELEMENTARY SCHOOL

LOCATION
800 McNAUGHTEN RD. COLUMBUS, OHIO 43213

CONTRACTOR
THOMAS AND MARKER CONSTRUCTION

ARCHITECT
BRAUN & STEIDL

DATE	NO.	DESCRIPTION	BY
5/28/11	B	For Checking	TMc
5/16/11	A	For Approval	TMc

North Central Fabrication, Ltd.

NORTH CENTRAL FABRICATION
Mansfield, OH 44906
419-529-2744 FAX 419-529-5387 http://www.northcentralfab

AISC CERTIFIED FABRICATOR

DESCRIPTION	DATE	DATE	JOB No.
BEAM	05/14/2011		70234
	DRAWN BY TMc	CHECKED BY TAN	DRG No. B106

PHASE				
1	2	3	4	5
1	0	0	0	0

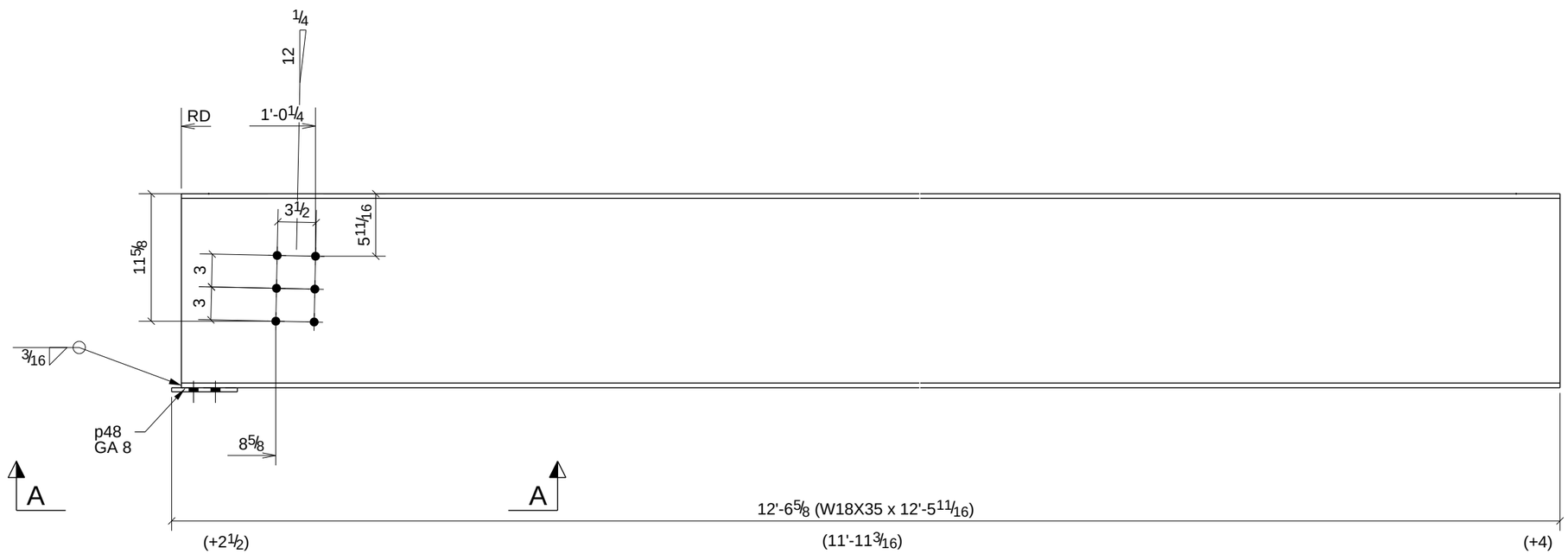

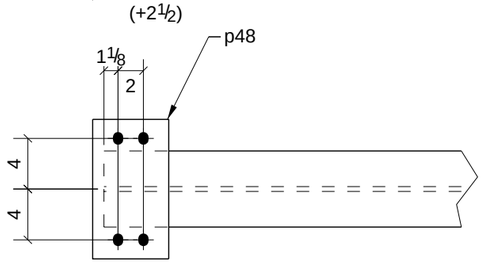

A - A

PROCESS CONTROL
PROCESS BY
FAB: _____
FIT AND WELD: _____
INSPECTION: _____
OTHER (IF NEEDED) _____
_____ : _____
_____ : _____
_____ : _____
_____ : _____
REFERENCE LATEST ERECTION DRAWINGS FOR MATERIAL & FABRICATION INFORMATION

ONE - BEAM - B107

W	17 11/16" x 1/4"
F	6" x 7/16"

DATE	NO.	DESCRIPTION	BY
5/28/11	B	For Checking	TMc
5/16/11	A	For Approval	TMc

BILL OF MATERIAL

Qty Ea.	Qty Tot	Piece Mark	Description	Length	Weight Total	Remarks	Adv Mill #	Steel Grade
	1	B107	BEAM					
	1		W18X35	12'-5 11/16"	437	SQ-2		A992
	1	p48	BAR3/8"X6"	0'-11"	7			A992

STEEL ASTM	A992	UNO
ELECTRODES	E70XX L.H.	UNO
WELDS	1/4" FILLET	UNO
OPEN HOLES	13/16" UNO	FINISH PER SPECS
BOLTS	3/4" A325N	UNO
PAINT	1 S/C STD PRIMER U.N.O.	UNO

PROJECT NAME
OLDE ORCHARD ELEMENTARY SCHOOL

LOCATION
800 McNAUGHTEN RD. COLUMBUS, OHIO 43213

CONTRACTOR
THOMAS AND MARKER CONSTRUCTION

ARCHITECT
BRAUN & STEIDL

North Central Fabrication, Ltd.
NORTH CENTRAL FABRICATION
Mansfield, OH 44906
419-529-2744 FAX 419-529-5387 http://www.northcentralfab
AISC CERTIFIED FABRICATOR

DESCRIPTION	DATE	DATE	JOB No.
BEAM	05/14/2011		70234
	DRAWN BY TMc	CHECKED BY TAN	DRG No. B107

PHASE				
1	2	3	4	5
1	0	0	0	0

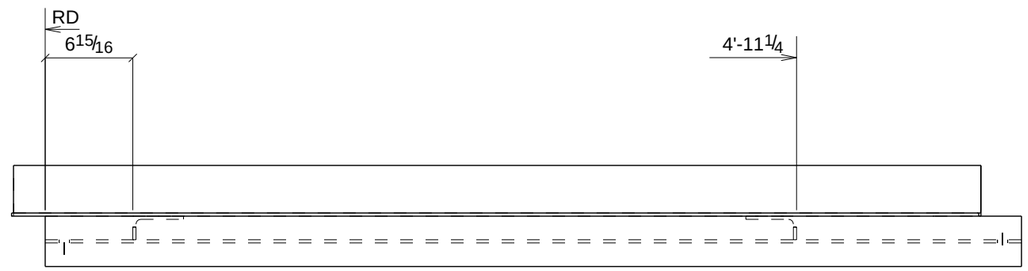

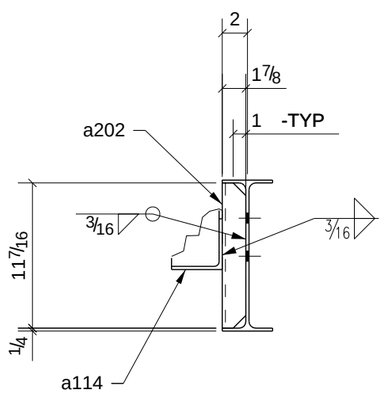

A - A

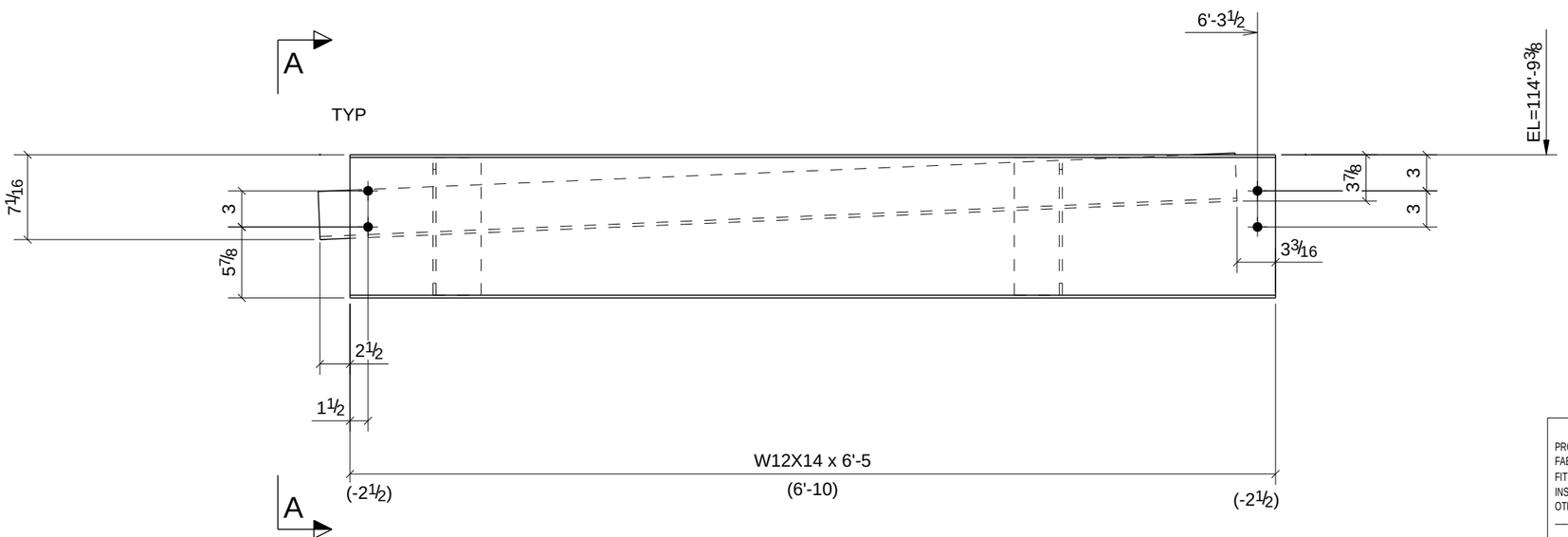

PROCESS CONTROL
PROCESS BY
FAB: _____
FIT AND WELD: _____
INSPECTION: _____
OTHER (IF NEEDED)
_____ : _____
_____ : _____
_____ : _____
_____ : _____
REFERENCE LATEST ERECTION DRAWINGS FOR MATERIAL & FABRICATION INFORMATION

ONE - BEAM - B108

W	11 7/8" x 3/16"
F	4" x 1/4"

BILL OF MATERIAL

Qty Ea.	Qty Tot	Piece Mark	Description	Length	Weight Total	Remarks	Adv Mill #	Steel Grade
	1	B108	BEAM					
	1		W12X14	6'-5"	91	SQ-2		A992
	1	a114	L4X4X1/4	6'-4 3/8"	42			A36
	2	a202	L4X4X1/4	0'-11 7/16"	13			A36

STEEL ASTM	A992	UNO
ELECTRODES	E70XX L.H.	UNO
WELDS	1/4" FILLET	UNO
OPEN HOLES	13/16" UNO	FINISH PER SPECS
BOLTS	3/4" A325N	UNO
PAINT	1 S/C STD PRIMER U.N.O.	UNO

PROJECT NAME
OLDE ORCHARD ELEMENTARY SCHOOL

LOCATION
800 McNAUGHTEN RD. COLUMBUS, OHIO 43213

CONTRACTOR
THOMAS AND MARKER CONSTRUCTION

ARCHITECT
BRAUN & STEIDL

DATE	NO.	DESCRIPTION	BY
5/28/11	B	For Checking	TMc
5/16/11	A	For Approval	TMc

North Central Fabrication, Ltd.
NORTH CENTRAL FABRICATION
Mansfield, OH 44906
419-529-2744 FAX 419-529-5387 http://www.northcentralfab
AISC CERTIFIED FABRICATOR

DESCRIPTION	DATE	DATE	JOB No.
BEAM	05/14/2011		70234
	DRAWN BY TMc	CHECKED BY TAN	DRG No. B108

PHASE				
1	2	3	4	5
1	0	0	0	0

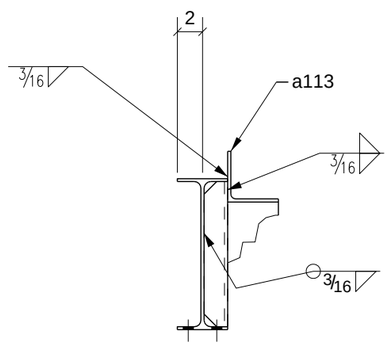

A - A

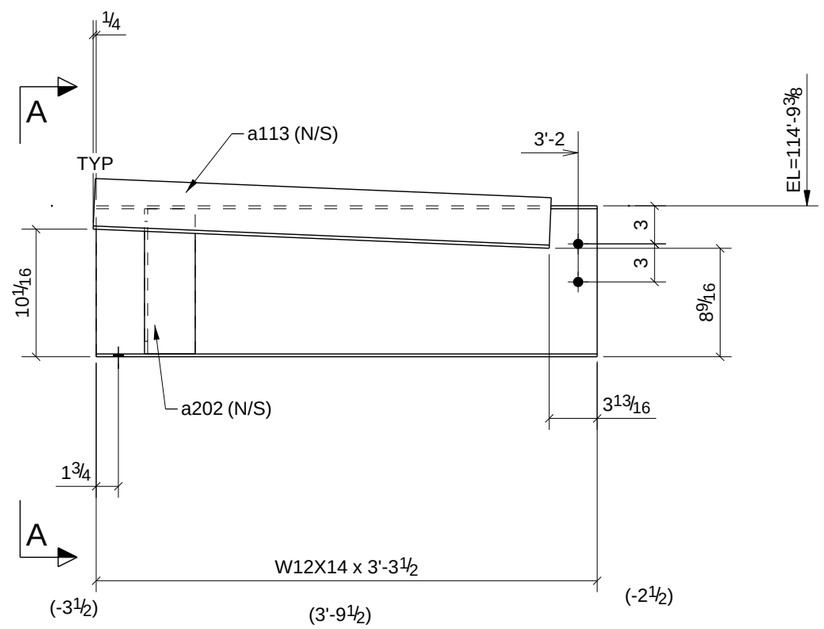

ONE - BEAM - B109

W	11 7/8" x 3/16"
F	4" x 1/4"

PROCESS CONTROL
PROCESS BY
FAB: _____
FIT AND WELD: _____
INSPECTION: _____
OTHER (IF NEEDED) _____
_____ : _____
_____ : _____
_____ : _____
_____ : _____
REFERENCE LATEST ERECTION DRAWINGS FOR MATERIAL & FABRICATION INFORMATION

BILL OF MATERIAL

Qty Ea.	Qty Tot	Piece Mark	Description	Length	Weight Total	Remarks	Adv Mill #	Steel Grade
	1	B109	BEAM					
	1		W12X14	3'-3 1/2"	47	SQ-2		A992
	1	a113	L4X4X1/4	3'-0"	20			A36
	1	a202	L4X4X1/4	0'-11 7/16"	6			A36

STEEL ASTM	A992		UNO
ELECTRODES	E70XX L.H.		UNO
WELDS	1/4" FILLET		UNO
OPEN HOLES	13/16"	UNO	FINISH PER SPECS
BOLTS	3/4" A325N		UNO
PAINT	1 S/C STD PRIMER U.N.O.		UNO

PROJECT NAME
OLDE ORCHARD ELEMENTARY SCHOOL

LOCATION
800 McNAUGHTEN RD. COLUMBUS, OHIO 43213

CONTRACTOR
THOMAS AND MARKER CONSTRUCTION

ARCHITECT
BRAUN & STEIDL

DATE	NO.	DESCRIPTION	BY
5/28/11	B	For Checking	TMc
5/16/11	A	For Approval	TMc

North Central Fabrication, Ltd.

NORTH CENTRAL FABRICATION
Mansfield, OH 44906
419-529-2744 FAX 419-529-5387 http://www.northcentralfab

AISC CERTIFIED FABRICATOR

DESCRIPTION	DATE	DATE	JOB No.
BEAM	05/14/2011		70234
	DRAWN BY TMc	CHECKED BY TAN	DRG No. B109

PHASE				
1	2	3	4	5
1	0	0	0	0

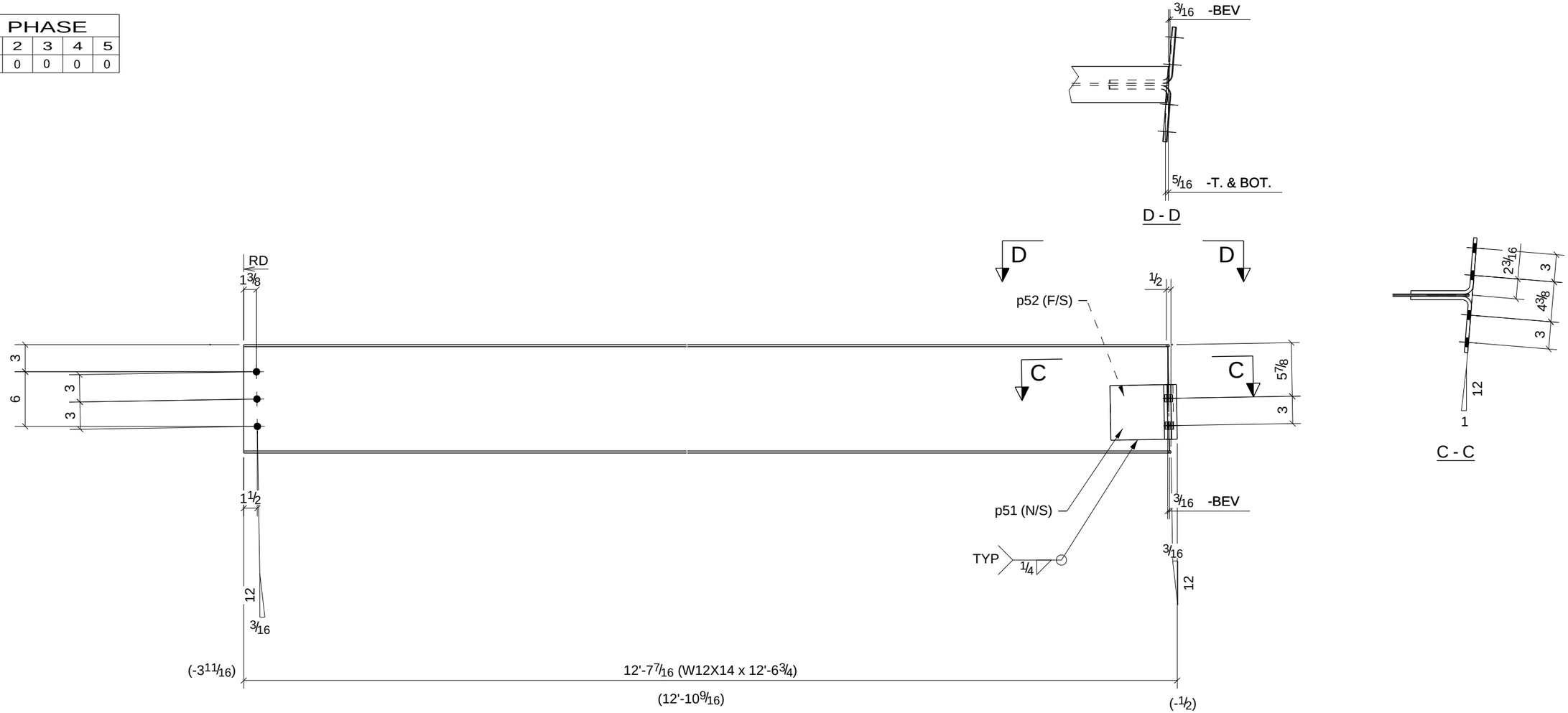

PROCESS CONTROL
PROCESS BY
FAB: _____
FIT AND WELD: _____
INSPECTION: _____
OTHER (IF NEEDED)
_____ : _____
_____ : _____
_____ : _____
_____ : _____
REFERENCE LATEST ERECTION DRAWINGS FOR MATERIAL & FABRICATION INFORMATION

ONE - BEAM - B110

W	11 7/8" x 3/16"
F	4" x 1/4"

BILL OF MATERIAL

Qty Ea.	Qty Tot	Piece Mark	Description	Length	Weight Total	Remarks	Adv Mill #	Steel Grade
	1	B110	BEAM					
	1		W12X14	12'-6 3/4"	178	SQ-1/BEV-1		A992
	1	p51	BAR3/8"X6"	1'-0 1/8"	8			A36
	1	p52	BAR3/8"X6"	1'-0 5/16"	8			A36

STEEL ASTM	A992	UNO
ELECTRODES	E70XX L.H.	UNO
WELDS	1/4" FILLET	UNO
OPEN HOLES	13/16" UNO	FINISH PER SPECS
BOLTS	3/4" A325N	UNO
PAINT	1 S/C STD PRIMER U.N.O.	UNO

PROJECT NAME
OLDE ORCHARD ELEMENTARY SCHOOL
LOCATION
800 McNAUGHTEN RD. COLUMBUS, OHIO 43213
CONTRACTOR
THOMAS AND MARKER CONSTRUCTION
ARCHITECT
BRAUN & STEIDL

DATE	NO.	DESCRIPTION	BY
5/28/11	B	For Checking	TMc
5/16/11	A	For Approval	TMc

North Central Fabrication, Ltd.

NORTH CENTRAL FABRICATION
Mansfield, OH 44906
419-529-2744 FAX 419-529-5387 http://www.northcentralfab

AISC CERTIFIED FABRICATOR

DESCRIPTION	DATE	DATE	JOB No.
BEAM	05/14/2011		70234
	DRAWN BY TMc	CHECKED BY TAN	DRG No. B110

PHASE				
1	2	3	4	5
2	0	0	0	0

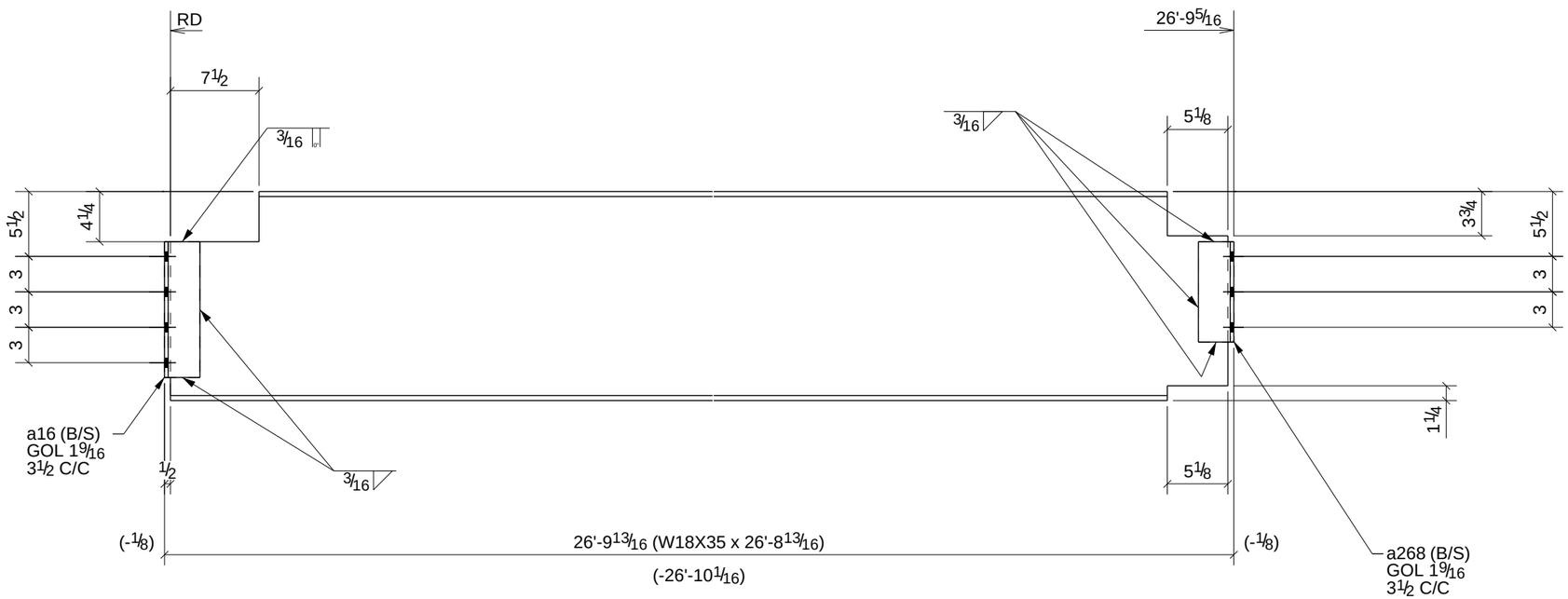

PROCESS CONTROL
PROCESS BY
FAB: _____
FIT AND WELD: _____
INSPECTION: _____
OTHER (IF NEEDED) _____
_____ : _____
_____ : _____
_____ : _____
_____ : _____
REFERENCE LATEST ERECTION DRAWINGS FOR MATERIAL & FABRICATION INFORMATION

2 - BEAMS - B111

W	17 11/16" x 1/4"
F	6" x 7/16"

BILL OF MATERIAL

Qty Ea.	Qty Tot	Piece Mark	Description	Length	Weight Total	Remarks	Adv Mill #	Steel Grade
	2	B111	BEAMS					
	2		W18X35	26'-8 13/16"	1874	SQ-2		A992
	4	a16	L3X3X5/16	0'-11 1/2"	23			A36
	4	a268	L3X3X5/16	0'-8 1/2"	17			A36

STEEL ASTM	A992	UNO
ELECTRODES	E70XX L.H.	UNO
WELDS	1/4" FILLET	UNO
OPEN HOLES	13/16" UNO	FINISH PER SPECS
BOLTS	3/4" A325N	UNO
PAINT	1 S/C STD PRIMER U.N.O.	UNO

PROJECT NAME
OLDE ORCHARD ELEMENTARY SCHOOL

LOCATION
800 McNAUGHTEN RD. COLUMBUS, OHIO 43213

CONTRACTOR
THOMAS AND MARKER CONSTRUCTION

ARCHITECT
BRAUN & STEIDL

DATE	NO.	DESCRIPTION	BY
5/28/11	B	For Checking	TMc
5/16/11	A	For Approval	TMc

North Central Fabrication, Ltd.

NORTH CENTRAL FABRICATION
Mansfield, OH 44906
419-529-2744 FAX 419-529-5387 http://www.northcentralfab

AISC CERTIFIED FABRICATOR

DESCRIPTION: BEAM	DATE: 05/18/2011	DATE	JOB No. 70234
	DRAWN BY: TMc	CHECKED BY: TAN	DRG No. B111

PHASE				
1	2	3	4	5
1	0	0	0	0

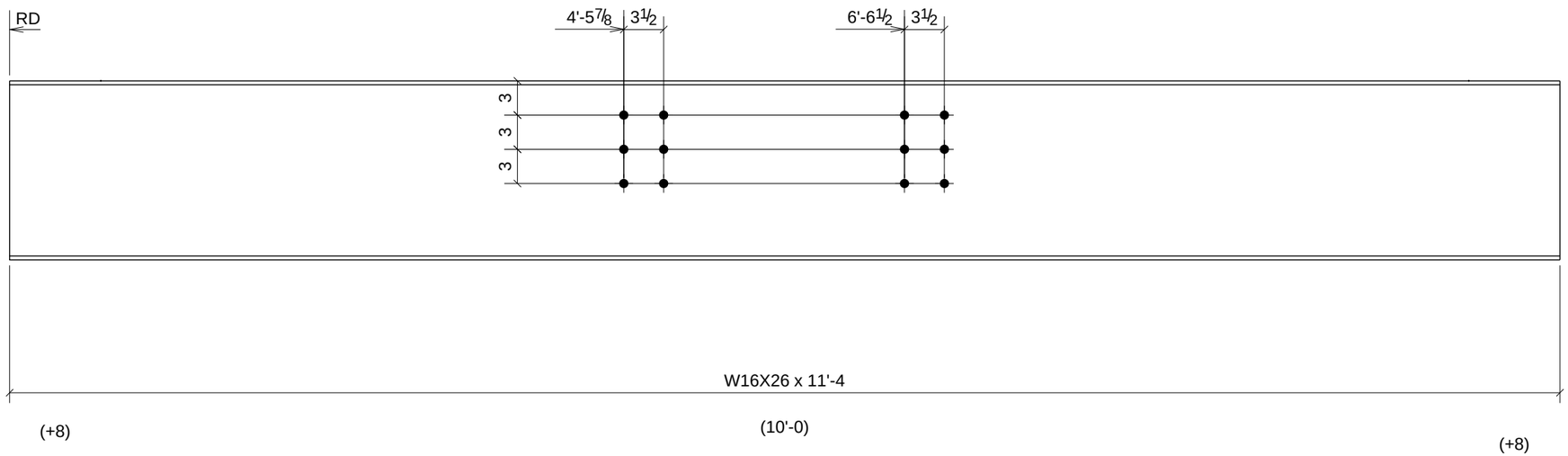

PROCESS CONTROL
PROCESS BY
FAB: _____
FIT AND WELD: _____
INSPECTION: _____
OTHER (IF NEEDED)
_____ : _____
_____ : _____
_____ : _____
_____ : _____
REFERENCE LATEST ERECTION DRAWINGS FOR MATERIAL & FABRICATION INFORMATION

ONE - BEAM - B112

W	15 11/16" x 1/4"
F	5 1/2" x 3/8"

DATE	NO.	DESCRIPTION	BY
5/28/11	B	For Checking	TMc
5/16/11	A	For Approval	TMc

BILL OF MATERIAL

Qty Ea.	Qty Tot	Piece Mark	Description	Length	Weight Total	Remarks	Adv Mill #	Steel Grade
	1	B112	BEAM					
	1		W16X26	11'-4"	296	SQ-2		A992

STEEL ASTM	A992		UNO
ELECTRODES	E70XX L.H.		UNO
WELDS	1/4" FILLET		UNO
OPEN HOLES	13/16"	UNO	FINISH PER SPECS
BOLTS	3/4" A325N		UNO
PAINT	1 S/C STD PRIMER U.N.O.		UNO

PROJECT NAME
OLDE ORCHARD ELEMENTARY SCHOOL

LOCATION
800 McNAUGHTEN RD. COLUMBUS, OHIO 43213

CONTRACTOR
THOMAS AND MARKER CONSTRUCTION

ARCHITECT
BRAUN & STEIDL

North Central Fabrication, Ltd.
NORTH CENTRAL FABRICATION
Mansfield, OH 44906
419-529-2744 FAX 419-529-5387 http://www.northcentralfab
AISC CERTIFIED FABRICATOR

DESCRIPTION	DATE	DATE	JOB No.
BEAM	05/19/2011		70234
	DRAWN BY TMc	CHECKED BY TAN	DRG No. B112

PHASE				
1	2	3	4	5
1	0	0	0	0

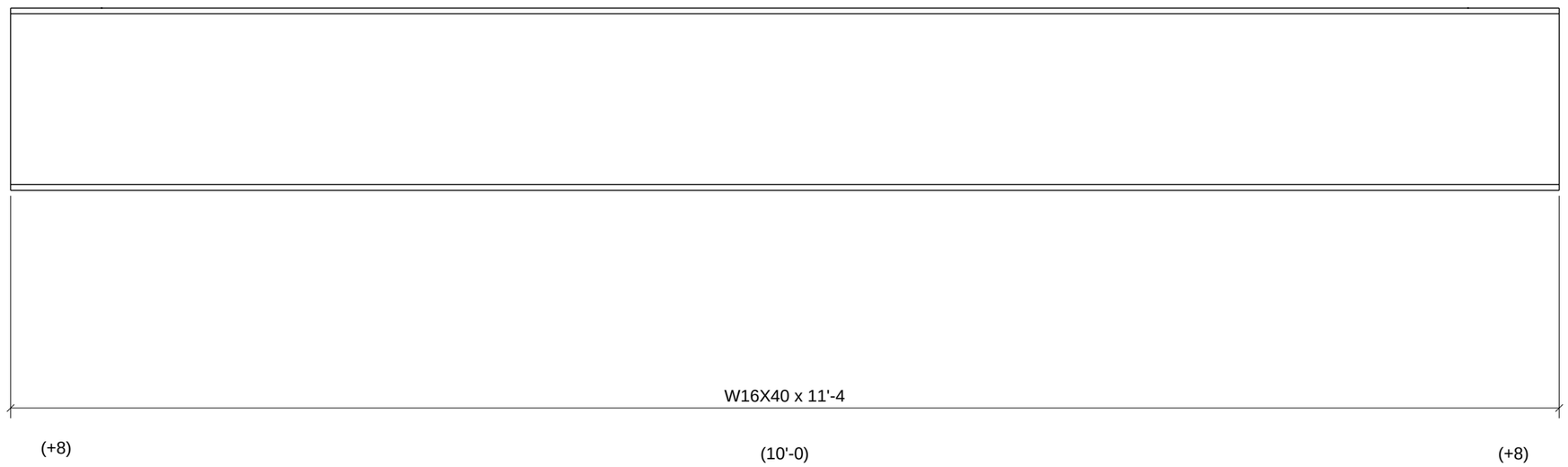

PROCESS CONTROL
PROCESS BY
FAB: _____
FIT AND WELD: _____
INSPECTION: _____
OTHER (IF NEEDED)
_____ : _____
_____ : _____
_____ : _____
_____ : _____
REFERENCE LATEST ERECTION DRAWINGS FOR MATERIAL & FABRICATION INFORMATION

ONE - BEAM - B113

W	16"x1/4"
F	7"x1/2"

DATE	NO.	DESCRIPTION	BY
5/28/11	B	For Checking	TMc
5/16/11	A	For Approval	TMc

BILL OF MATERIAL

Qty Ea.	Qty Tot	Piece Mark	Description	Length	Weight Total	Remarks	Adv Mill #	Steel Grade
	1	B113	BEAM					
	1		W16X40	11'-4"	455	SQ-2		A992

STEEL ASTM	A992	UNO
ELECTRODES	E70XX L.H.	UNO
WELDS	1/4" FILLET	UNO
OPEN HOLES	13/16" UNO	FINISH PER SPECS
BOLTS	3/4" A325N	UNO
PAINT	1 S/C STD PRIMER U.N.O.	UNO

PROJECT NAME
OLDE ORCHARD ELEMENTARY SCHOOL

LOCATION
800 McNAUGHTEN RD. COLUMBUS, OHIO 43213

CONTRACTOR
THOMAS AND MARKER CONSTRUCTION

ARCHITECT
BRAUN & STEIDL

North Central Fabrication, Ltd.
NORTH CENTRAL FABRICATION
Mansfield, OH 44906
419-529-2744 FAX 419-529-5387 http://www.northcentralfab
AISC CERTIFIED FABRICATOR

DESCRIPTION	DATE	DATE	JOB No.
BEAM	05/14/2011		70234
	DRAWN BY TMc	CHECKED BY TAN	DRG No. B113

PHASE				
1	2	3	4	5
1	0	0	0	0

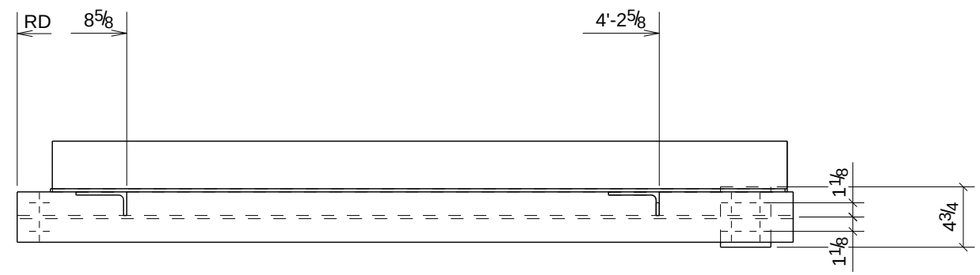

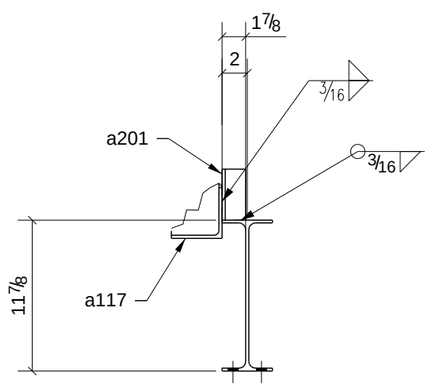

A - A

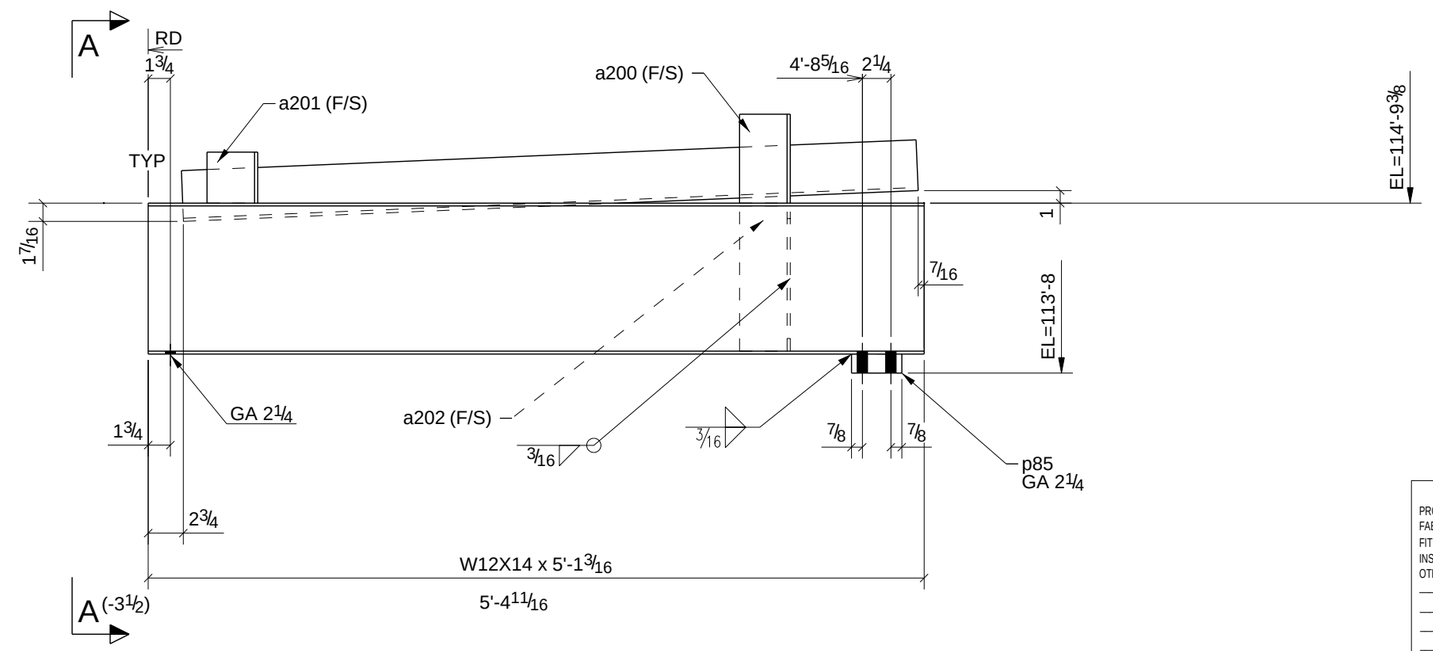

ONE - BEAM - B114

PROCESS CONTROL
PROCESS BY
FAB: _____
FIT AND WELD: _____
INSPECTION: _____
OTHER (IF NEEDED) _____
_____ : _____
_____ : _____
_____ : _____
_____ : _____
_____ : _____
REFERENCE LATEST ERECTION DRAWINGS FOR MATERIAL & FABRICATION INFORMATION

BILL OF MATERIAL

Qty Ea.	Qty Tot	Piece Mark	Description	Length	Weight Total	Remarks	Adv Mill #	Steel Grade
	1	B114	BEAM					
	1		W12X14	5'-1 3/16"	72	SQ-2		A992
	1	a117	L4X4X1/4	4'-10"	32			A36
	1	a200	L4X4X1/4	0'-7"	4			A36
	1	a201	L4X4X1/4	0'-4"	2			A36
	1	a202	L4X4X1/4	0'-11 7/16"	6			A36
	1	p85	PL1 1/2"X4"	0'-4 3/4"	8			A36

W	11 7/8" x 3/16"	
F	4" x 1/4"	

DATE	NO.	DESCRIPTION	BY
5/28/11	B	For Checking	TMc
5/16/11	A	For Approval	TMc

STEEL ASTM	A992	UNO
ELECTRODES	E70XX L.H.	UNO
WELDS	1/4" FILLET	UNO
OPEN HOLES	13/16" UNO	FINISH PER SPECS
BOLTS	3/4" A325N	UNO
PAINT	1 S/C STD PRIMER U.N.O.	UNO

PROJECT NAME
OLDE ORCHARD ELEMENTARY SCHOOL

LOCATION
800 McNAUGHTEN RD. COLUMBUS, OHIO 43213

CONTRACTOR
THOMAS AND MARKER CONSTRUCTION

ARCHITECT
BRAUN & STEIDL

North Central Fabrication, Ltd.
NORTH CENTRAL FABRICATION
Mansfield, OH 44906
419-529-2744 FAX 419-529-5387 http://www.northcentralfab
AISC CERTIFIED FABRICATOR

DESCRIPTION	DATE	DATE	JOB No.
BEAM	05/14/2011		70234
	DRAWN BY TMc	CHECKED BY TAN	DRG No. B114

PHASE				
1	2	3	4	5
1	0	0	0	0

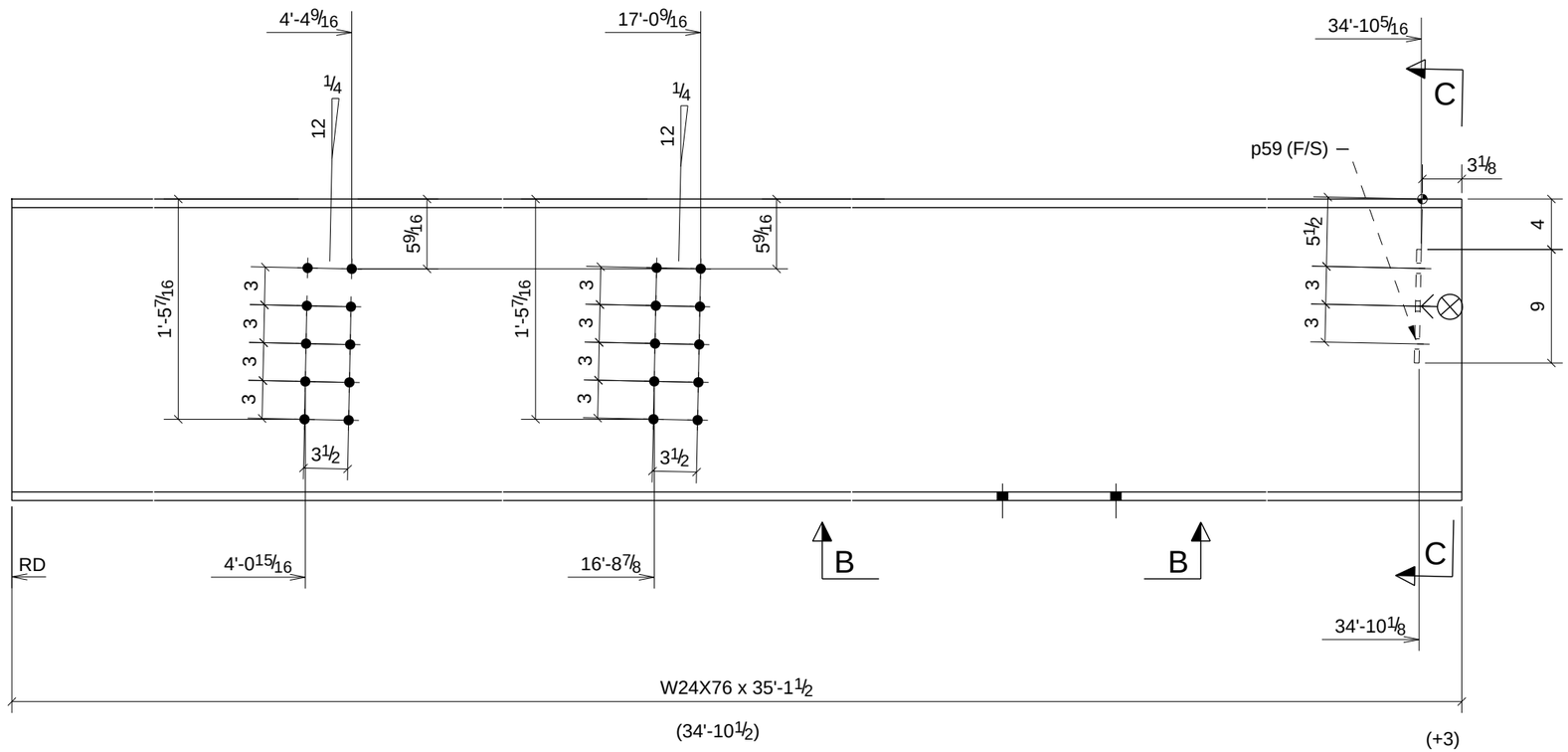

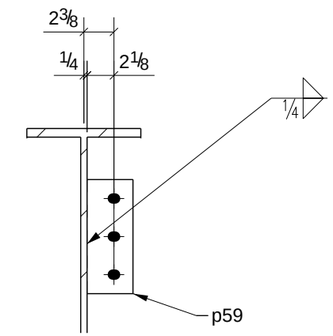

C - C

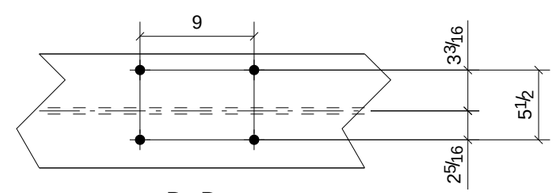

B - B

PROCESS CONTROL
PROCESS BY
FAB: _____
FIT AND WELD: _____
INSPECTION: _____
OTHER (IF NEEDED) _____
_____ : _____
_____ : _____
_____ : _____
_____ : _____
REFERENCE LATEST ERECTION DRAWINGS FOR MATERIAL & FABRICATION INFORMATION

ONE - BEAM - B115

W	23 7/8" x 7/16"
F	9" x 11/16"

DATE	NO.	DESCRIPTION	BY
5/28/11	B	For Checking	TMc
5/16/11	A	For Approval	TMc

BILL OF MATERIAL

Qty Ea.	Qty Tot	Piece Mark	Description	Length	Weight Total	Remarks	Adv Mill #	Steel Grade
	1	B115	BEAM					
	1		W24X76	35'-1 1/2"	2678	SQ-2		A992
	1	p59	PL3/8"X3 5/8"	0'-9"	3			A992

STEEL ASTM	A992	UNO
ELECTRODES	E70XX L.H.	UNO
WELDS	1/4" FILLET	UNO
OPEN HOLES	13/16" UNO	FINISH PER SPECS
BOLTS	3/4" A325N	UNO
PAINT	1 S/C STD PRIMER U.N.O.	UNO

PROJECT NAME
OLDE ORCHARD ELEMENTARY SCHOOL

LOCATION
800 McNAUGHTEN RD. COLUMBUS, OHIO 43213

CONTRACTOR
THOMAS AND MARKER CONSTRUCTION

ARCHITECT
BRAUN & STEIDL

North Central Fabrication, Ltd.
NORTH CENTRAL FABRICATION
Mansfield, OH 44906
419-529-2744 FAX 419-529-5387 http://www.northcentralfab

AISC CERTIFIED FABRICATOR

DESCRIPTION	DATE	DATE	JOB No.
BEAM	05/14/2011		70234
	DRAWN BY TMc	CHECKED BY TAN	DRG No. B115

PHASE				
1	2	3	4	5
1	0	0	0	0

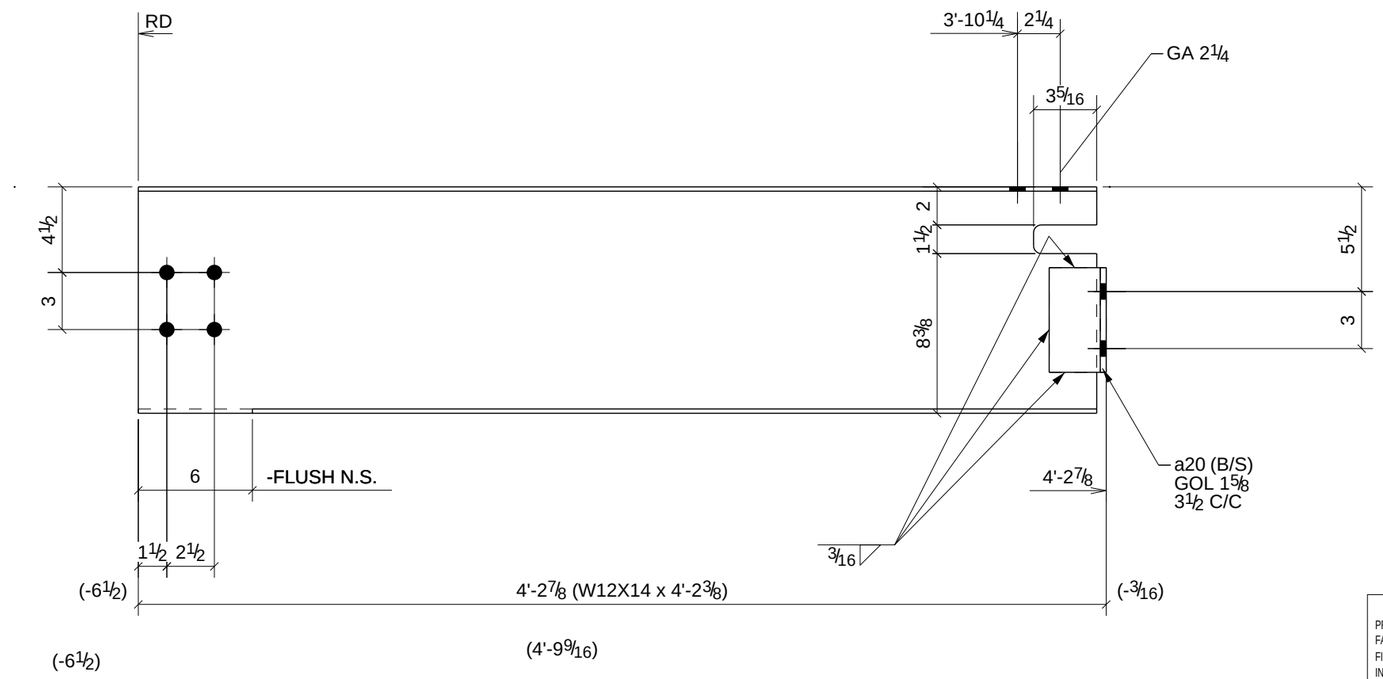

PROCESS CONTROL
PROCESS BY
FAB: _____
FIT AND WELD: _____
INSPECTION: _____
OTHER (IF NEEDED) _____
_____ : _____
_____ : _____
_____ : _____
_____ : _____
_____ : _____
REFERENCE LATEST ERECTION DRAWINGS FOR MATERIAL & FABRICATION INFORMATION

ONE - BEAM - B116

W	11 7/8" x 3/16"
F	4" x 1/4"

DATE	NO.	DESCRIPTION	BY
5/28/11	B	For Checking	TMc
5/16/11	A	For Approval	TMc

BILL OF MATERIAL

Qty Ea.	Qty Tot	Piece Mark	Description	Length	Weight Total	Remarks	Adv Mill #	Steel Grade
	1	B116	BEAM					
	1		W12X14	4'-2 3/8"	59	SQ-2		A992
	2	a20	L3X3X5/16	0'-5 1/2"	6			A36

STEEL ASTM	A992		UNO
ELECTRODES	E70XX L.H.		UNO
WELDS	1/4" FILLET		UNO
OPEN HOLES	13/16" UNO	FINISH	PER SPECS
BOLTS	3/4" A325N		UNO
PAINT	1 S/C STD PRIMER U.N.O.		UNO

PROJECT NAME
OLDE ORCHARD ELEMENTARY SCHOOL

LOCATION
800 McNAUGHTEN RD. COLUMBUS, OHIO 43213

CONTRACTOR
THOMAS AND MARKER CONSTRUCTION

ARCHITECT
BRAUN & STEIDL

North Central Fabrication, Ltd.
NORTH CENTRAL FABRICATION
Mansfield, OH 44906
419-529-2744 FAX 419-529-5387 http://www.northcentralfab
AISC CERTIFIED FABRICATOR

DESCRIPTION	DATE	DATE	JOB No.
BEAM	05/14/2011		70234
	DRAWN BY TMc	CHECKED BY TAN	DRG No. B116

PHASE				
1	2	3	4	5
1	0	0	0	0

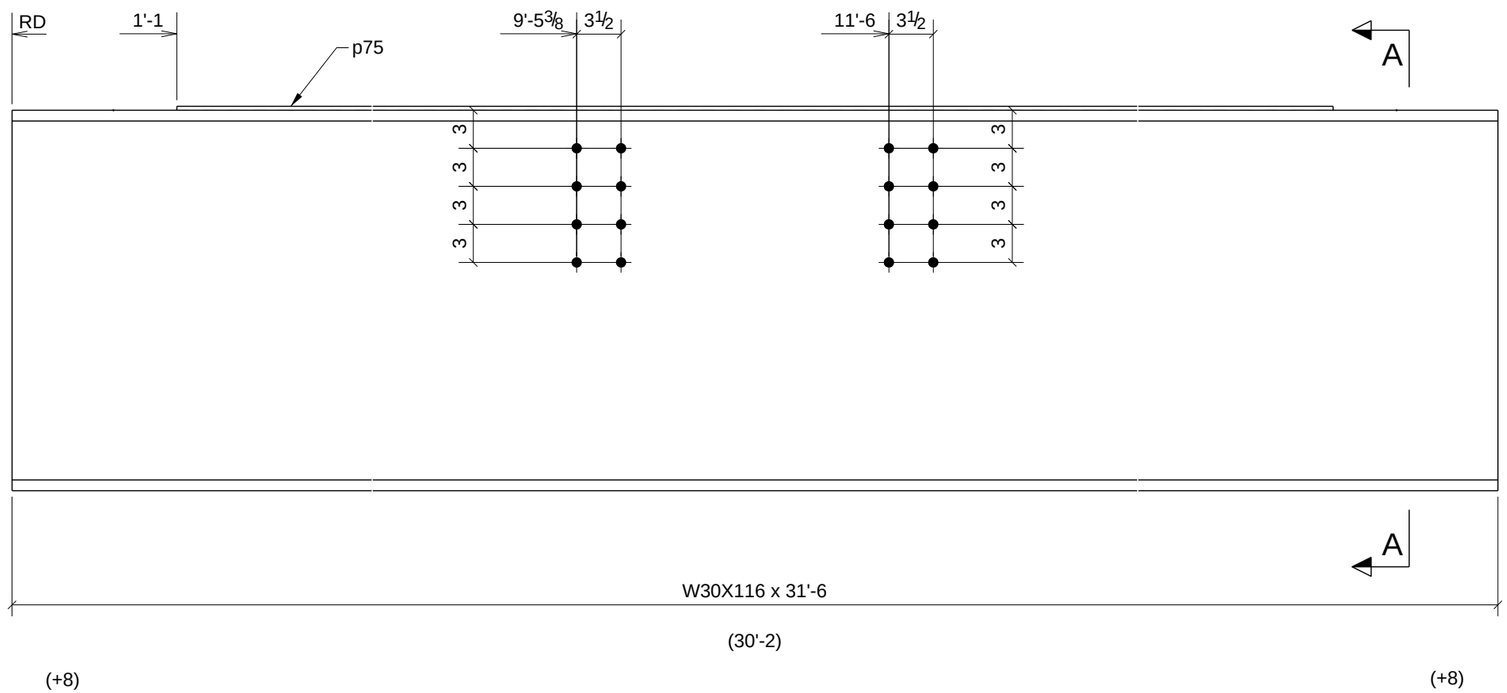

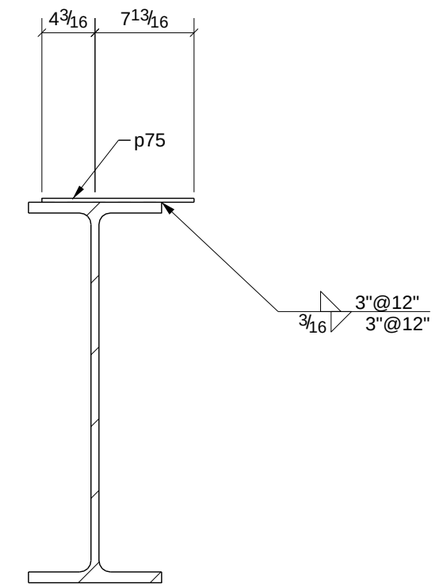

PROCESS CONTROL
PROCESS BY
FAB: _____
FIT AND WELD: _____
INSPECTION: _____
OTHER (IF NEEDED) _____
_____ : _____
_____ : _____
_____ : _____
_____ : _____
REFERENCE LATEST ERECTION DRAWINGS FOR MATERIAL & FABRICATION INFORMATION

ONE - BEAM - B118

W	30" x 9/16"
F	10 1/2" x 7/8"

DATE	NO.	DESCRIPTION	BY
5/28/11	B	For Checking	TMc
5/16/11	A	For Approval	TMc

BILL OF MATERIAL

Qty Ea.	Qty Tot	Piece Mark	Description	Length	Weight Total	Remarks	Adv Mill #	Steel Grade
	1	B118	BEAM					
	1		W30X116	31'-6"	3666	SQ-2		A992
	1	p75	BAR5/16"X12"	29'-4"	374			A36

STEEL ASTM	A992	UNO
ELECTRODES	E70XX L.H.	UNO
WELDS	1/4" FILLET	UNO
OPEN HOLES	13/16" UNO	FINISH PER SPECS
BOLTS	3/4" A325N	UNO
PAINT	1 S/C STD PRIMER U.N.O.	UNO

PROJECT NAME
OLDE ORCHARD ELEMENTARY SCHOOL

LOCATION
800 McNAUGHTEN RD. COLUMBUS, OHIO 43213

CONTRACTOR
THOMAS AND MARKER CONSTRUCTION

ARCHITECT
BRAUN & STEIDL

North Central Fabrication, Ltd.
NORTH CENTRAL FABRICATION
Mansfield, OH 44906
419-529-2744 FAX 419-529-5387 http://www.northcentralfab
AISC CERTIFIED FABRICATOR

DESCRIPTION	DATE	DATE	JOB No.
BEAM	05/14/2011		70234
	DRAWN BY TMc	CHECKED BY TAN	DRG No. B118

PHASE				
1	2	3	4	5
1	0	0	0	0

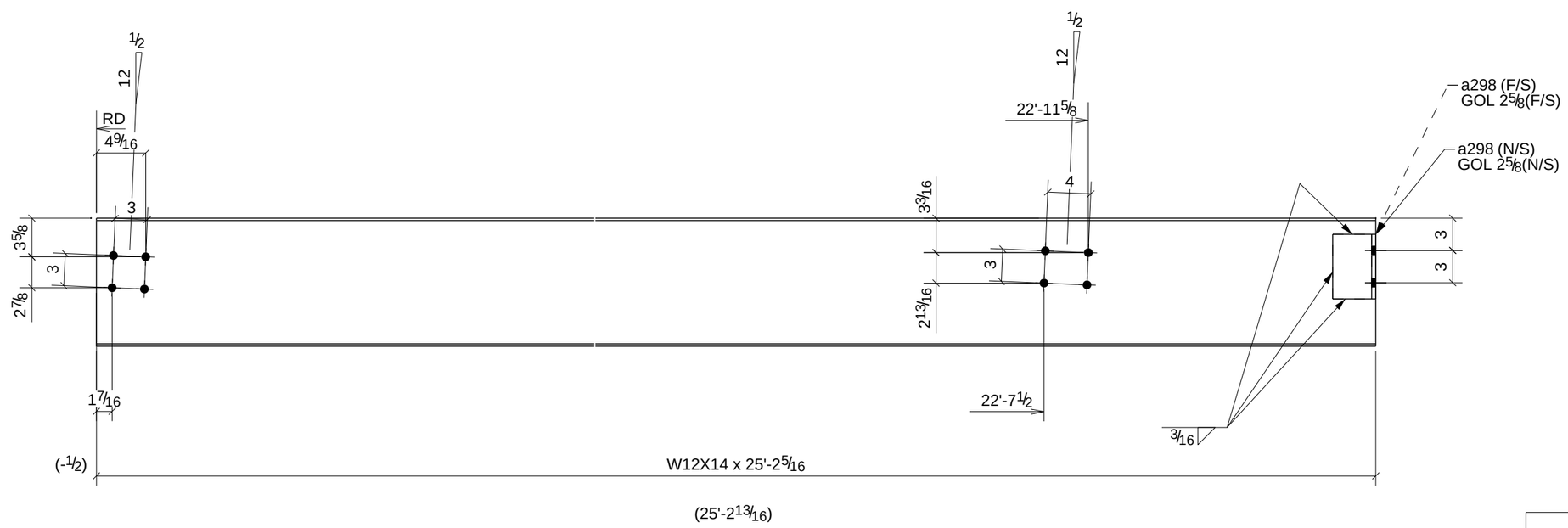

PROCESS CONTROL
PROCESS BY
FAB: _____
FIT AND WELD: _____
INSPECTION: _____
OTHER (IF NEEDED) _____
_____ : _____
_____ : _____
_____ : _____
_____ : _____
REFERENCE LATEST ERECTION DRAWINGS FOR MATERIAL & FABRICATION INFORMATION

ONE - BEAM - B119

W	11 7/8" x 3/16"
F	4" x 1/4"

DATE	NO.	DESCRIPTION	BY
5/28/11	B	For Checking	TMc
5/16/11	A	For Approval	TMc

BILL OF MATERIAL

Qty Ea.	Qty Tot	Piece Mark	Description	Length	Weight Total	Remarks	Adv Mill #	Steel Grade
	1	B119	BEAM					
	1		W12X14	25'-2 5/16"	357	SQ-2		A992
	2	a298	L4X4X3/8	0'-6"	10			A36

STEEL ASTM	A992	UNO
ELECTRODES	E70XX L.H.	UNO
WELDS	1/4" FILLET	UNO
OPEN HOLES	13/16" UNO	FINISH PER SPECS
BOLTS	3/4" A325N	UNO
PAINT	1 S/C STD PRIMER U.N.O.	UNO

PROJECT NAME
OLDE ORCHARD ELEMENTARY SCHOOL

LOCATION
800 McNAUGHTEN RD. COLUMBUS, OHIO 43213

CONTRACTOR
THOMAS AND MARKER CONSTRUCTION

ARCHITECT
BRAUN & STEIDL

North Central Fabrication, Ltd.
NORTH CENTRAL FABRICATION
Mansfield, OH 44906
419-529-2744 FAX 419-529-5387 http://www.northcentralfab
AISC CERTIFIED FABRICATOR

DESCRIPTION	DATE	DATE	JOB No.
BEAM	05/14/2011		70234
	DRAWN BY TMc	CHECKED BY TAN	DRG No. B119

PHASE				
1	2	3	4	5
1	0	0	0	0

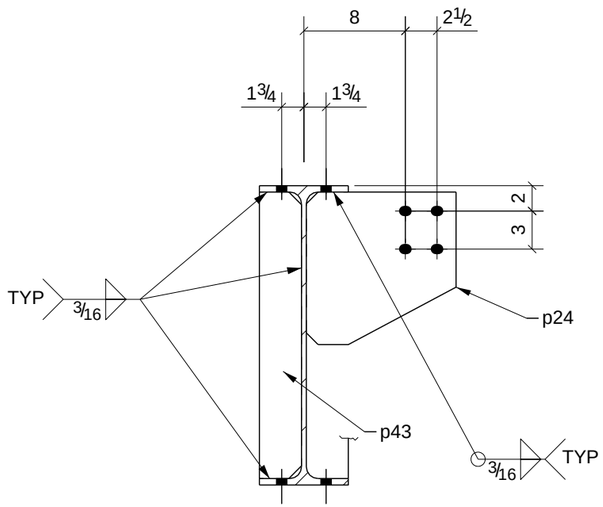

A - A

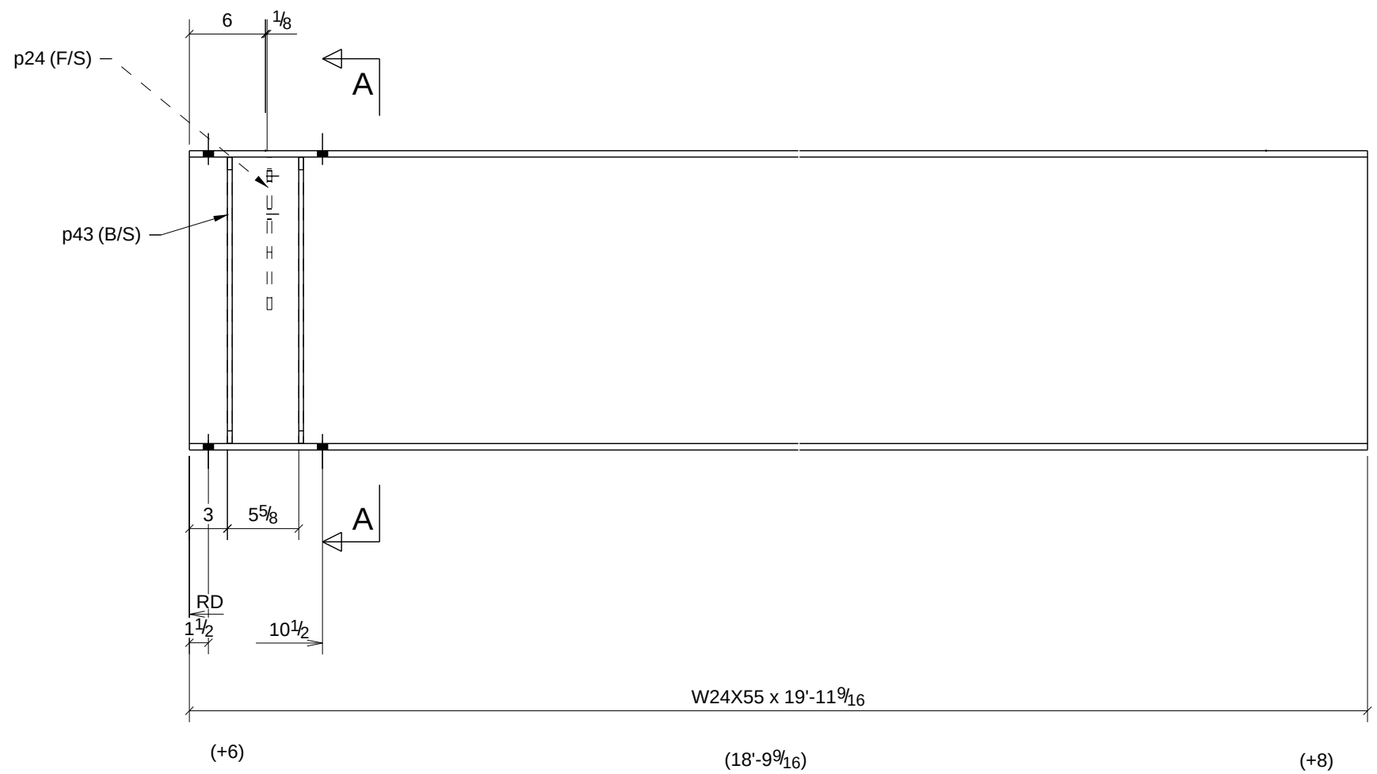

PROCESS CONTROL
PROCESS BY
FAB:
FIT AND WELD:
INSPECTION:
OTHER (IF NEEDED)
:
:
:
:
REFERENCE LATEST ERECTION DRAWINGS FOR MATERIAL & FABRICATION INFORMATION

ONE - BEAM - B122

W	23 5/8" x 3/8"
F	7" x 1/2"

DATE	NO.	DESCRIPTION	BY
5/28/11	B	For Checking	TMc
5/16/11	A	For Approval	TMc

BILL OF MATERIAL

Qty Ea.	Qty Tot	Piece Mark	Description	Length	Weight Total	Remarks	Adv Mill #	Steel Grade
	1	B122	BEAM					
	1		W24X55	19'-11 9/16"	1101	SQ-2		A992
	1	p24	PL3/8"X11 13/16"	1'-0 1/16"	13			A992
	4	p43	PL3/8"X3 5/16"	1'-10 9/16"	31			A36

STEEL ASTM	A992	UNO
ELECTRODES	E70XX L.H.	UNO
WELDS	1/4" FILLET	UNO
OPEN HOLES	13/16" UNO	FINISH PER SPECS
BOLTS	3/4" A325N	UNO
PAINT	1 S/C STD PRIMER U.N.O.	UNO

PROJECT NAME
OLDE ORCHARD ELEMENTARY SCHOOL

LOCATION
800 McNAUGHTEN RD. COLUMBUS, OHIO 43213

CONTRACTOR
THOMAS AND MARKER CONSTRUCTION

ARCHITECT
BRAUN & STEIDL

North Central Fabrication, Ltd.

NORTH CENTRAL FABRICATION
Mansfield, OH 44906
419-529-2744 FAX 419-529-5387 http://www.northcentralfab

AISC CERTIFIED FABRICATOR

DESCRIPTION	DATE	DATE	JOB No.
BEAM	05/14/2011		70234
	DRAWN BY TMc	CHECKED BY TAN	DRG No. B122

PHASE				
1	2	3	4	5
1	0	0	0	0

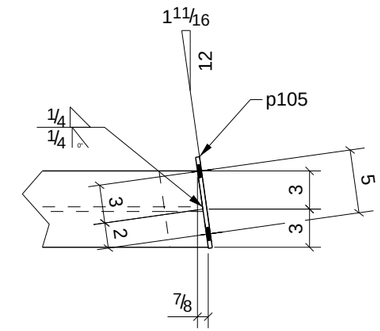

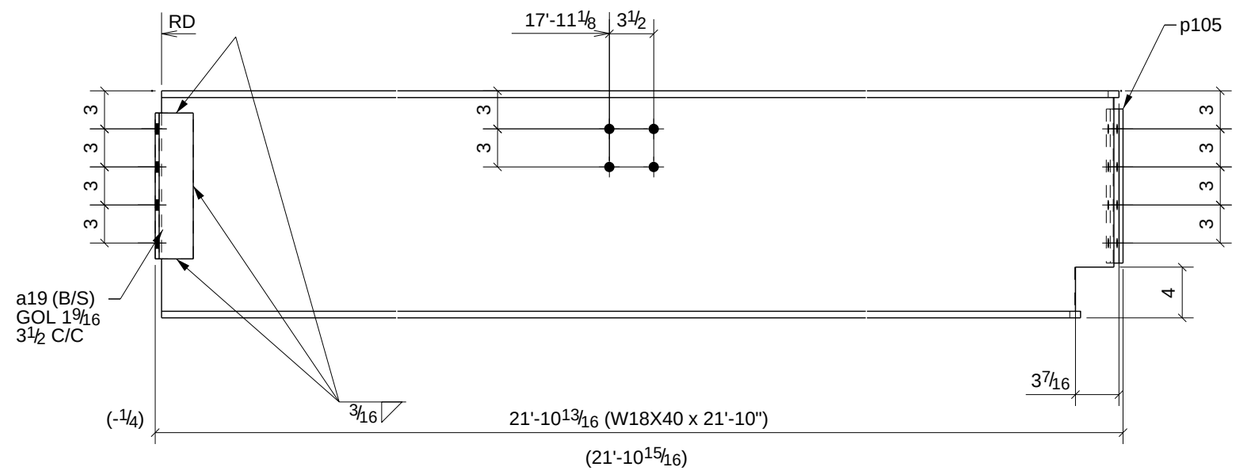

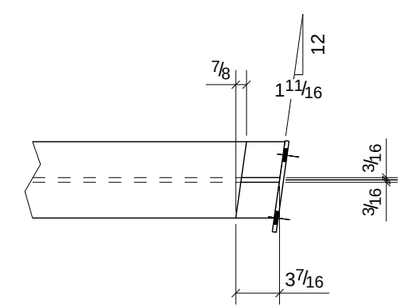

PROCESS CONTROL
PROCESS BY
FAB: _____
FIT AND WELD: _____
INSPECTION: _____
OTHER (IF NEEDED) _____
_____ : _____
_____ : _____
_____ : _____
_____ : _____
REFERENCE LATEST ERECTION DRAWINGS FOR MATERIAL & FABRICATION INFORMATION

ONE - BEAM - B123

W	17 7/8" x 1/4"
F	6" x 1/2"

BILL OF MATERIAL

Qty Ea.	Qty Tot	Piece Mark	Description	Length	Weight Total	Remarks	Adv Mill #	Steel Grade
	1	B123	BEAM					
	1		W18X40	21'-10"	877	SQ-1/BEV-1		A992
	2	a19	L3X3X5/16	0'-11 1/2"	12			A36
	1	p105	BAR5/16"X7 1/4"	1'-0 1/8"	8			A36

STEEL ASTM	A992	UNO
ELECTRODES	E70XX L.H.	UNO
WELDS	1/4" FILLET	UNO
OPEN HOLES	13/16" UNO	FINISH PER SPECS
BOLTS	3/4" A325N	UNO
PAINT	1 S/C STD PRIMER U.N.O.	UNO

PROJECT NAME
OLDE ORCHARD ELEMENTARY SCHOOL
LOCATION
800 McNAUGHTEN RD. COLUMBUS, OHIO 43213
CONTRACTOR
THOMAS AND MARKER CONSTRUCTION
ARCHITECT
BRAUN & STEIDL

DATE	NO.	DESCRIPTION	BY
5/28/11	B	For Checking	TMc
5/16/11	A	For Approval	TMc

North Central Fabrication, Ltd.
NORTH CENTRAL FABRICATION
Mansfield, OH 44906
419-529-2744 FAX 419-529-5387 http://www.northcentralfab
AISC CERTIFIED FABRICATOR

DESCRIPTION	DATE	DATE	JOB No.
BEAM	05/14/2011		70234
	DRAWN BY TMc	CHECKED BY TAN	DRG No. B123

PHASE				
1	2	3	4	5
1	0	0	0	0

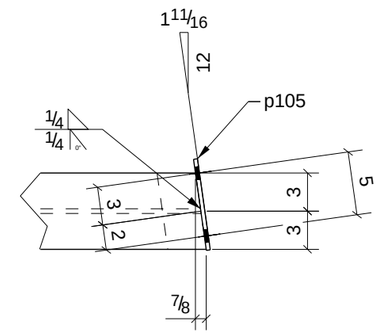

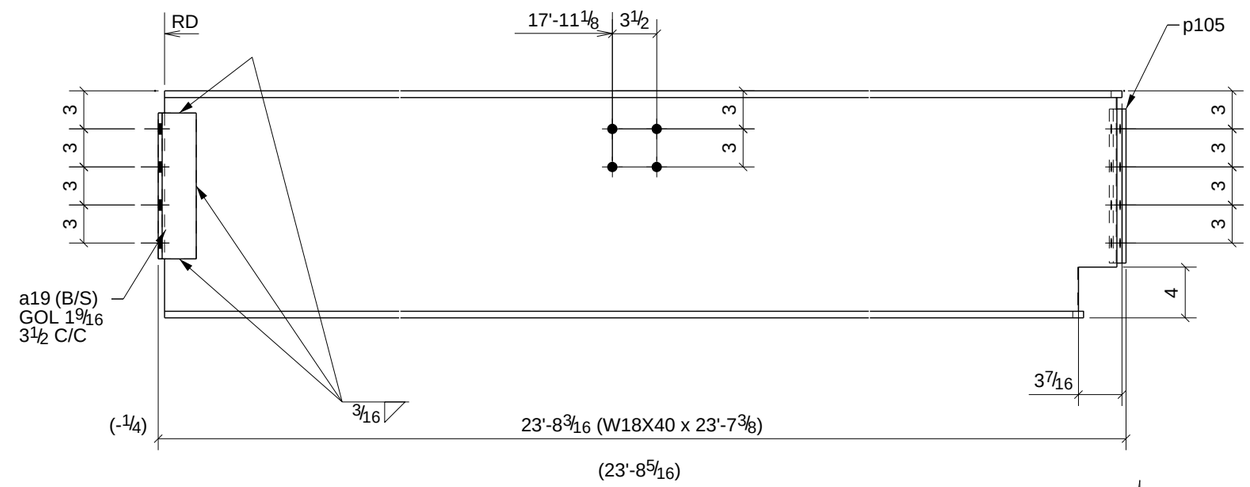

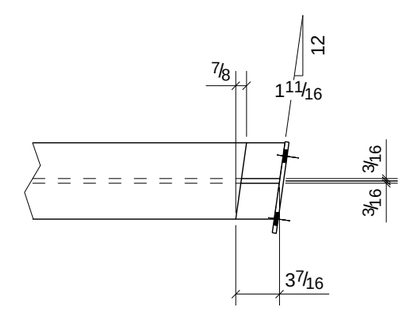

PROCESS CONTROL
PROCESS BY
FAB: _____
FIT AND WELD: _____
INSPECTION: _____
OTHER (IF NEEDED) _____
_____ : _____
_____ : _____
_____ : _____
_____ : _____
REFERENCE LATEST ERECTION DRAWINGS FOR MATERIAL & FABRICATION INFORMATION

ONE - BEAM - B124

W	17 7/8" x 1/4"
F	6" x 1/2"

BILL OF MATERIAL

Qty Ea.	Qty Tot	Piece Mark	Description	Length	Weight Total	Remarks	Adv Mill #	Steel Grade
	1	B124	BEAM					
	1		W18X40	23'-7 3/8"	948	SQ-1/BEV-1		A992
	2	a19	L3X3X5/16	0'-11 1/2"	12			A36
	1	p105	BAR5/16"X7 1/4"	1'-0 1/8"	8			A36

STEEL ASTM	A992	UNO
ELECTRODES	E70XX L.H.	UNO
WELDS	1/4" FILLET	UNO
OPEN HOLES	13/16" UNO	FINISH PER SPECS
BOLTS	3/4" A325N	UNO
PAINT	1 S/C STD PRIMER U.N.O.	UNO

PROJECT NAME
OLDE ORCHARD ELEMENTARY SCHOOL
LOCATION
800 McNAUGHTEN RD. COLUMBUS, OHIO 43213
CONTRACTOR
THOMAS AND MARKER CONSTRUCTION
ARCHITECT
BRAUN & STEIDL

DATE	NO.	DESCRIPTION	BY
5/28/11	B	For Checking	TMc
5/16/11	A	For Approval	TMc

North Central Fabrication, Ltd.
NORTH CENTRAL FABRICATION
Mansfield, OH 44906
419-529-2744 FAX 419-529-5387 http://www.northcentralfab
AISC CERTIFIED FABRICATOR

DESCRIPTION: BEAM	DATE: 05/15/2011	DATE	JOB No. 70234
	DRAWN BY: TMc	CHECKED BY: TAN	DRG No. B124

PHASE				
1	2	3	4	5
1	0	0	0	0

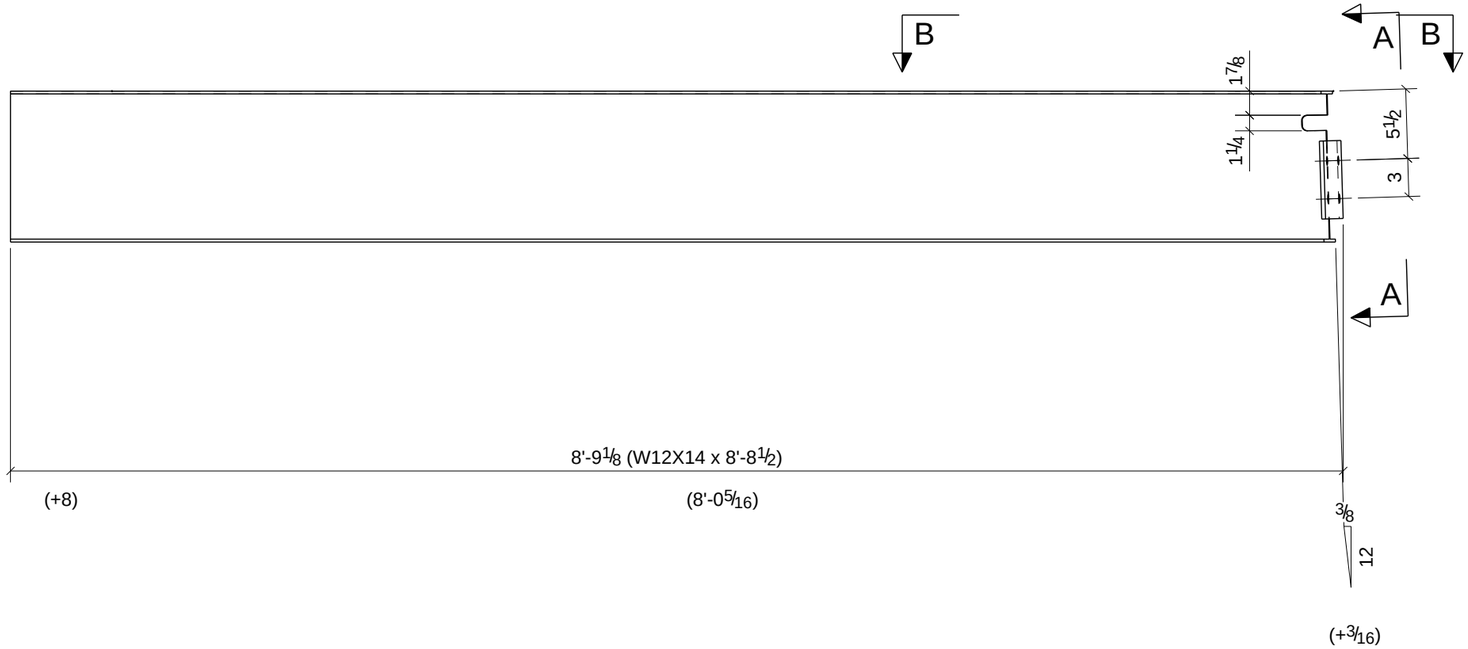

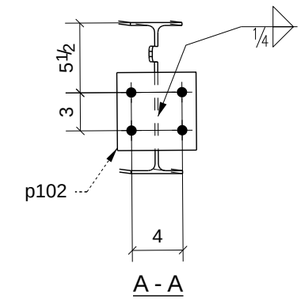

PROCESS CONTROL
PROCESS BY
FAB: _____
FIT AND WELD: _____
INSPECTION: _____
OTHER (IF NEEDED) _____
_____ : _____
_____ : _____
_____ : _____
_____ : _____
_____ : _____
REFERENCE LATEST ERECTION DRAWINGS FOR MATERIAL & FABRICATION INFORMATION

ONE - BEAM - B126

W	11 7/8" x 3/16"
F	4" x 1/4"

DATE	NO.	DESCRIPTION	BY
5/28/11	B	For Checking	TMc
5/16/11	A	For Approval	TMc

BILL OF MATERIAL

Qty Ea.	Qty Tot	Piece Mark	Description	Length	Weight Total	Remarks	Adv Mill #	Steel Grade
	1	B126	BEAM					
	1		W12X14	8'-8 1/2"	123	SQ-1/BEV-1		A992
	1	p102	PL5/16"X6 1/8"	0'-6 1/4"	3			A36

STEEL ASTM	A992	UNO
ELECTRODES	E70XX L.H.	UNO
WELDS	1/4" FILLET	UNO
OPEN HOLES	13/16" UNO	FINISH PER SPECS
BOLTS	3/4" A325N	UNO
PAINT	1 S/C STD PRIMER U.N.O.	UNO

PROJECT NAME
OLDE ORCHARD ELEMENTARY SCHOOL

LOCATION
800 McNAUGHTEN RD. COLUMBUS, OHIO 43213

CONTRACTOR
THOMAS AND MARKER CONSTRUCTION

ARCHITECT
BRAUN & STEIDL

North Central Fabrication, Ltd.
NORTH CENTRAL FABRICATION
Mansfield, OH 44906
419-529-2744 FAX 419-529-5387 http://www.northcentralfab
AISC CERTIFIED FABRICATOR

DESCRIPTION	DATE	DATE	JOB No.
BEAM	05/14/2011		70234
	DRAWN BY TMc	CHECKED BY TAN	DRG No. B126

PHASE				
1	2	3	4	5
1	0	0	0	0

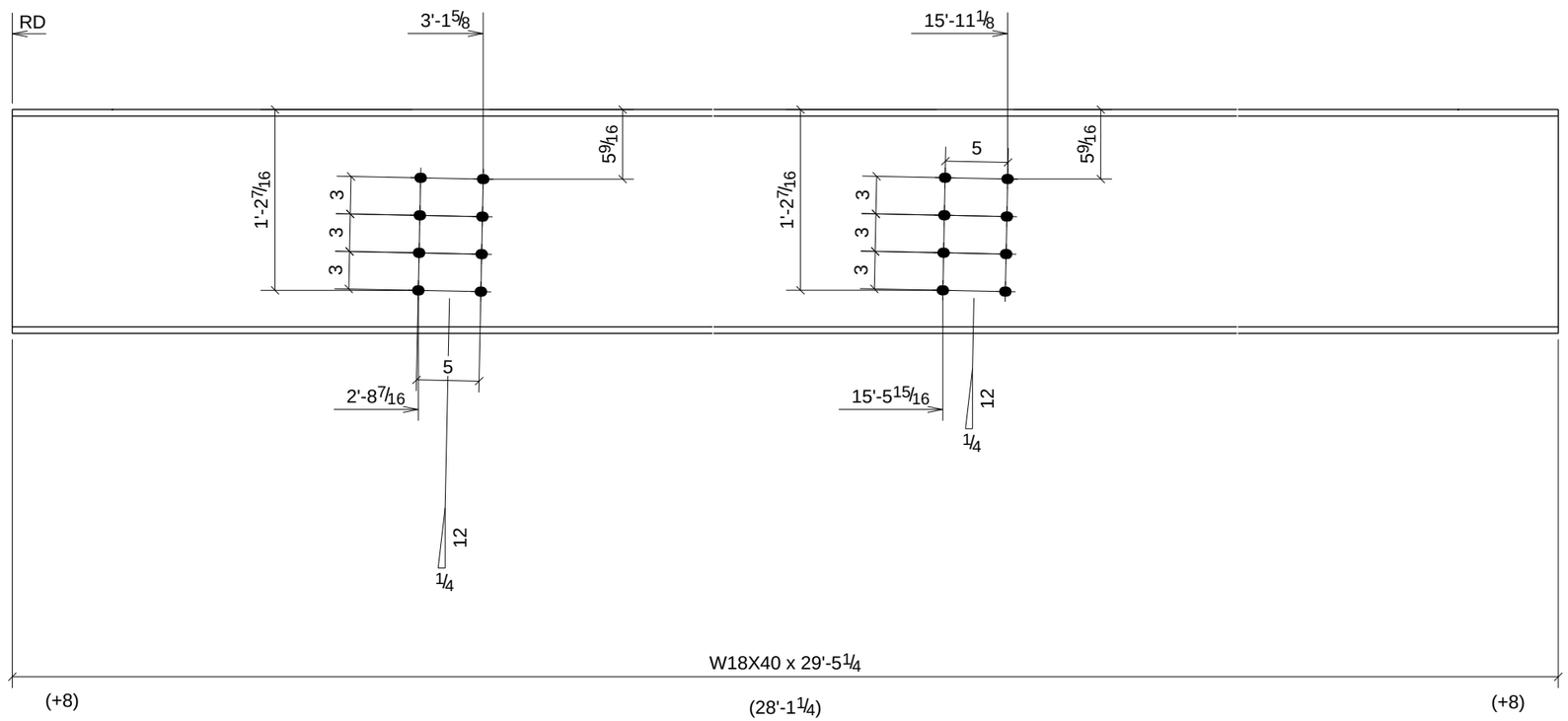

PROCESS CONTROL
PROCESS BY
FAB: _____
FIT AND WELD: _____
INSPECTION: _____
OTHER (IF NEEDED) _____
_____ : _____
_____ : _____
_____ : _____
_____ : _____
REFERENCE LATEST ERECTION DRAWINGS FOR MATERIAL & FABRICATION INFORMATION

ONE - BEAM - B127

W	17 7/8" x 1/4"
F	6" x 1/2"

DATE	NO.	DESCRIPTION	BY
5/28/11	B	For Checking	TMc
5/16/11	A	For Approval	TMc

BILL OF MATERIAL

Qty Ea.	Qty Tot	Piece Mark	Description	Length	Weight Total	Remarks	Adv Mill #	Steel Grade
	1	B127	BEAM					
	1		W18X40	29'-5 1/4"	1182	SQ-2		A992

STEEL ASTM	A992	UNO
ELECTRODES	E70XX L.H.	UNO
WELDS	1/4" FILLET	UNO
OPEN HOLES	13/16" UNO	FINISH PER SPECS
BOLTS	3/4" A325N	UNO
PAINT	1 S/C STD PRIMER U.N.O.	UNO

PROJECT NAME
OLDE ORCHARD ELEMENTARY SCHOOL

LOCATION
800 McNAUGHTEN RD. COLUMBUS, OHIO 43213

CONTRACTOR
THOMAS AND MARKER CONSTRUCTION

ARCHITECT
BRAUN & STEIDL

North Central Fabrication, Ltd.
NORTH CENTRAL FABRICATION
Mansfield, OH 44906
419-529-2744 FAX 419-529-5387 http://www.northcentralfab
AISC CERTIFIED FABRICATOR

DESCRIPTION	DATE	DATE	JOB No.
BEAM	05/14/2011		70234
	DRAWN BY TMc	CHECKED BY TAN	DRG No. B127

PHASE				
1	2	3	4	5
1	0	0	0	0

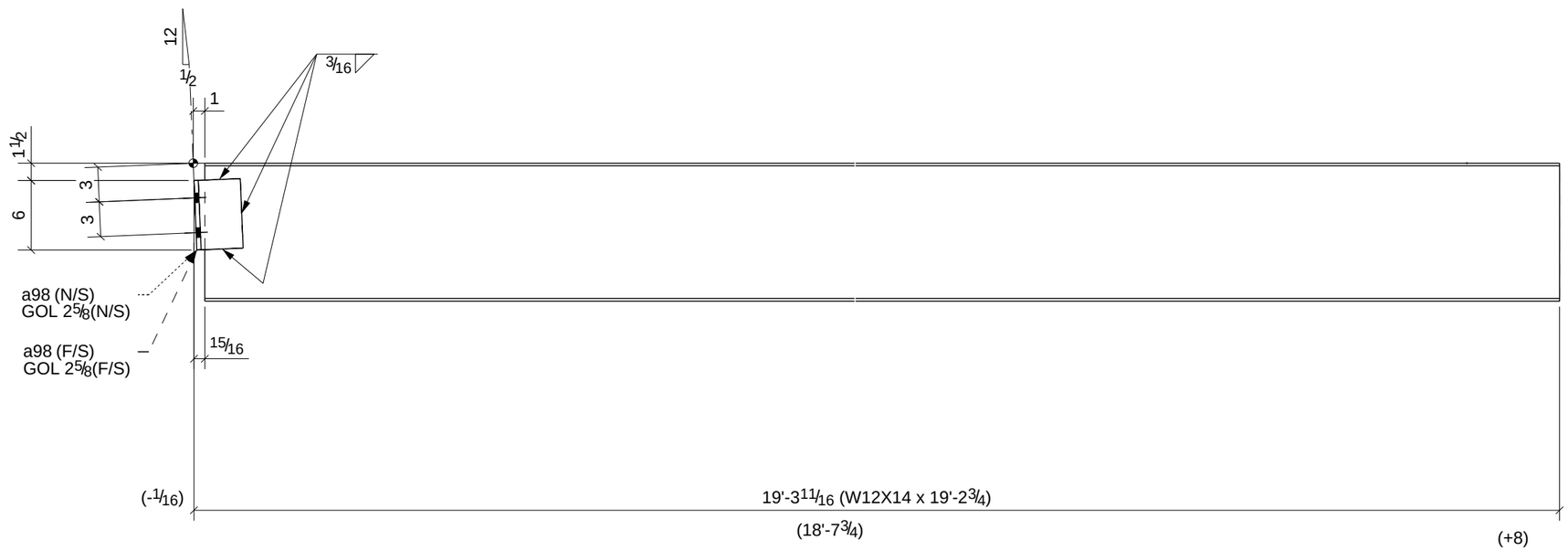

PROCESS CONTROL
PROCESS BY
FAB: _____
FIT AND WELD: _____
INSPECTION: _____
OTHER (IF NEEDED) _____
_____ : _____
_____ : _____
_____ : _____
_____ : _____
_____ : _____
REFERENCE LATEST ERECTION DRAWINGS FOR MATERIAL & FABRICATION INFORMATION

ONE - BEAM - B128

W	11 7/8" x 3/16"
F	4" x 1/4"

DATE	NO.	DESCRIPTION	BY
5/28/11	B	For Checking	TMc
5/16/11	A	For Approval	TMc

BILL OF MATERIAL

Qty Ea.	Qty Tot	Piece Mark	Description	Length	Weight Total	Remarks	Adv Mill #	Steel Grade
	1	B128	BEAM					
	1		W12X14	19'-2 3/4"	272	SQ-2		A992
	2	a98	L4X4X3/8	0'-6"	10			A36

STEEL ASTM	A992	UNO
ELECTRODES	E70XX L.H.	UNO
WELDS	1/4" FILLET	UNO
OPEN HOLES	13/16" UNO	FINISH PER SPECS
BOLTS	3/4" A325N	UNO
PAINT	1 S/C STD PRIMER U.N.O.	UNO

PROJECT NAME
OLDE ORCHARD ELEMENTARY SCHOOL

LOCATION
800 McNAUGHTEN RD. COLUMBUS, OHIO 43213

CONTRACTOR
THOMAS AND MARKER CONSTRUCTION

ARCHITECT
BRAUN & STEIDL

North Central Fabrication, Ltd.
NORTH CENTRAL FABRICATION
Mansfield, OH 44906
419-529-2744 FAX 419-529-5387 http://www.northcentralfab
AISC CERTIFIED FABRICATOR

DESCRIPTION	DATE	DATE	JOB No.
BEAM	05/14/2011		70234
	DRAWN BY TMc	CHECKED BY TAN	DRG No. B128

PHASE				
1	2	3	4	5
1	0	0	0	0

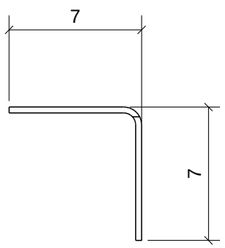

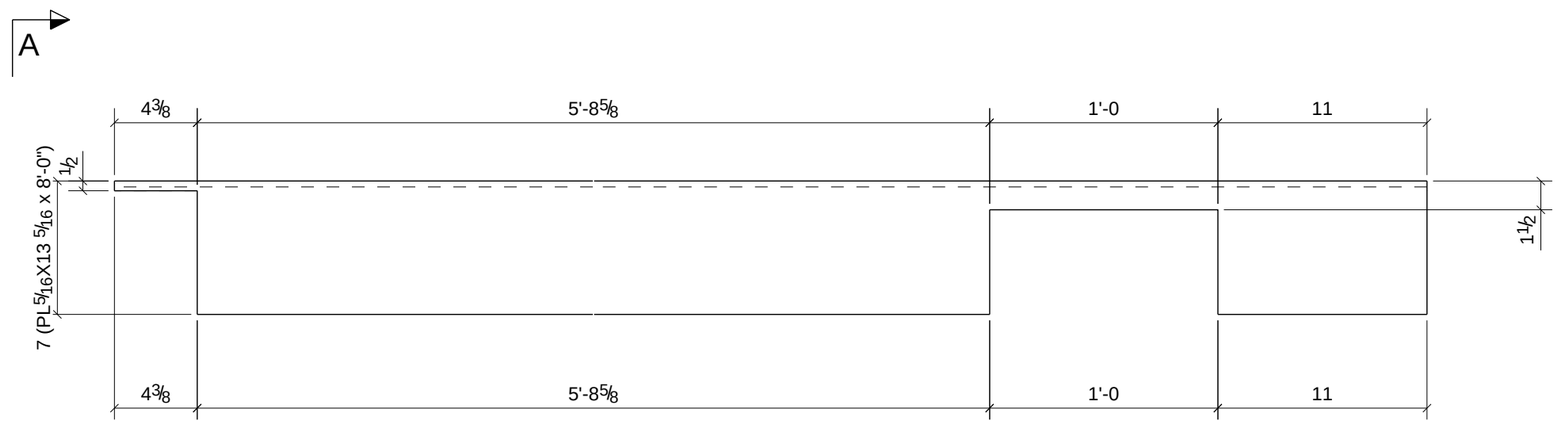

A - A

ONE - BENT PLATE - M1

PROCESS CONTROL
PROCESS BY
FAB: _____
FIT AND WELD: _____
INSPECTION: _____
OTHER (IF NEEDED) _____
_____ : _____
_____ : _____
_____ : _____
_____ : _____
REFERENCE LATEST ERECTION DRAWINGS FOR MATERIAL & FABRICATION INFORMATION

DATE	NO.	DESCRIPTION	BY
5/28/11	B	For Checking	TMc
5/16/11	A	For Approval	TMc

BILL OF MATERIAL

Qty Ea.	Qty Tot	Piece Mark	Description	Length	Weight Total	Remarks	Adv Mill #	Steel Grade
	1	M1	BENT PLATE					
	1		PL5/16"X13 5/16"	8'-0"	105	SQ-2		A36

STEEL ASTM	A992	UNO
ELECTRODES	E70XX L.H.	UNO
WELDS	1/4" FILLET	UNO
OPEN HOLES	13/16" UNO	FINISH PER SPECS
BOLTS	3/4" A325N	UNO
PAINT	1 S/C STD PRIMER U.N.O.	UNO

PROJECT NAME
OLDE ORCHARD ELEMENTARY SCHOOL

LOCATION
800 McNAUGHTEN RD. COLUMBUS, OHIO 43213

CONTRACTOR
THOMAS AND MARKER CONSTRUCTION

ARCHITECT
BRAUN & STEIDL

North Central Fabrication, Ltd.
NORTH CENTRAL FABRICATION
Mansfield, OH 44906
419-529-2744 FAX 419-529-5387 http://www.northcentralfab
AISC CERTIFIED FABRICATOR

DESCRIPTION	DATE	DATE	JOB No.
BENT PLATE	05/18/2011		70234
	DRAWN BY TMc	CHECKED BY TAN	DRG No. M1

PHASE				
1	2	3	4	5
2	0	0	0	0

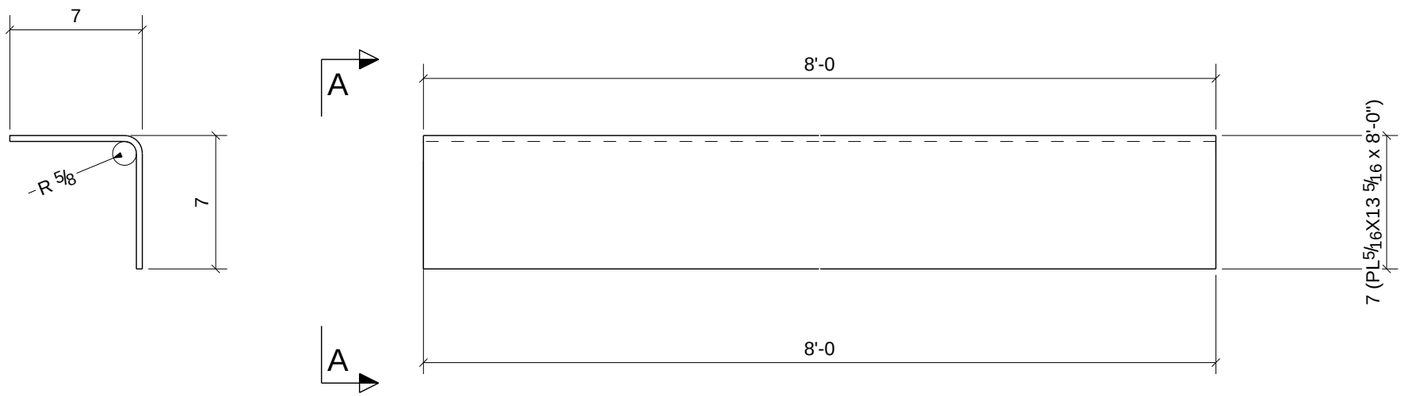

A - A

PROCESS CONTROL
PROCESS BY
FAB: _____
FIT AND WELD: _____
INSPECTION: _____
OTHER (IF NEEDED) _____
_____ : _____
_____ : _____
_____ : _____
_____ : _____
REFERENCE LATEST ERECTION DRAWINGS FOR MATERIAL & FABRICATION INFORMATION

2 - BENT PLATES - M2

DATE	NO.	DESCRIPTION	BY
5/28/11	B	For Checking	TMc
5/16/11	A	For Approval	TMc

BILL OF MATERIAL

Qty Ea.	Qty Tot	Piece Mark	Description	Length	Weight Total	Remarks	Adv Mill #	Steel Grade
	2	M2	BENT PLATES					
	2		PL5/16"X13 5/16"	8'-0"	227	SQ-2		A36

STEEL ASTM	A992	UNO
ELECTRODES	E70XX L.H.	UNO
WELDS	1/4" FILLET	UNO
OPEN HOLES	13/16"	UNO
FINISH	PER SPECS	
BOLTS	3/4" A325N	UNO
PAINT	1 S/C STD PRIMER U.N.O.	UNO

PROJECT NAME
OLDE ORCHARD ELEMENTARY SCHOOL

LOCATION
800 McNAUGHTEN RD. COLUMBUS, OHIO 43213

CONTRACTOR
THOMAS AND MARKER CONSTRUCTION

ARCHITECT
BRAUN & STEIDL

North Central Fabrication, Ltd.

NORTH CENTRAL FABRICATION
Mansfield, OH 44906
419-529-2744 FAX 419-529-5387 http://www.northcentralfab

AISC CERTIFIED FABRICATOR

DESCRIPTION	DATE	DATE	JOB No.
BENT PLATE	05/18/2011		70234
	DRAWN BY TMc	CHECKED BY TAN	DRG No. M2

PHASE				
1	2	3	4	5
1	0	0	0	0

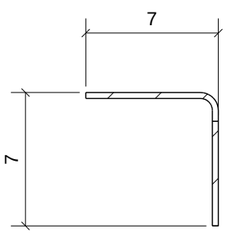

A - A

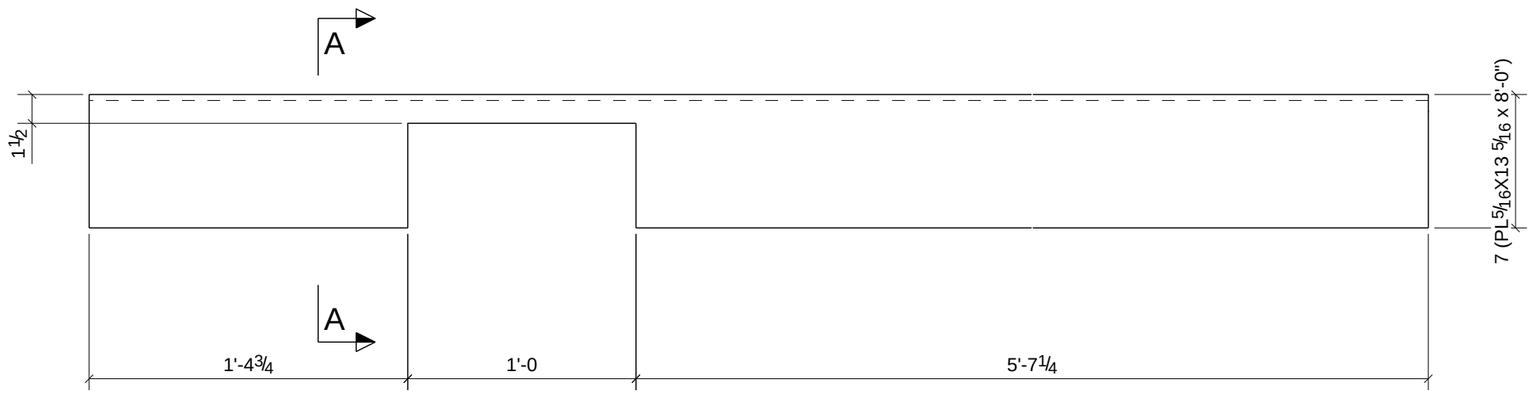

PROCESS CONTROL
PROCESS BY
FAB: _____
FIT AND WELD: _____
INSPECTION: _____
OTHER (IF NEEDED)
_____ : _____
_____ : _____
_____ : _____
_____ : _____
_____ : _____
REFERENCE LATEST ERECTION DRAWINGS FOR MATERIAL & FABRICATION INFORMATION

ONE - BENT PLATE - M3

DATE	NO.	DESCRIPTION	BY
5/28/11	B	For Checking	TMc
5/16/11	A	For Approval	TMc

BILL OF MATERIAL

Qty Ea.	Qty Tot	Piece Mark	Description	Length	Weight Total	Remarks	Adv Mill #	Steel Grade
	1	M3	BENT PLATE					
	1		PL5/16"X13 5/16"	8'-0"	108	SQ-2		A36

STEEL ASTM	A992	UNO
ELECTRODES	E70XX L.H.	UNO
WELDS	1/4" FILLET	UNO
OPEN HOLES	13/16" UNO	FINISH PER SPECS
BOLTS	3/4" A325N	UNO
PAINT	1 S/C STD PRIMER U.N.O.	UNO

PROJECT NAME
OLDE ORCHARD ELEMENTARY SCHOOL

LOCATION
800 McNAUGHTEN RD. COLUMBUS, OHIO 43213

CONTRACTOR
THOMAS AND MARKER CONSTRUCTION

ARCHITECT
BRAUN & STEIDL

North Central Fabrication, Ltd.

NORTH CENTRAL FABRICATION
Mansfield, OH 44906
419-529-2744 FAX 419-529-5387 http://www.northcentralfab

AISC CERTIFIED FABRICATOR

DESCRIPTION	DATE		JOB No.
BENT PLATE	05/18/2011		70234
	DRAWN BY TMc	CHECKED BY TAN	DRG No. M3

PHASE				
1	2	3	4	5
1	0	0	0	0

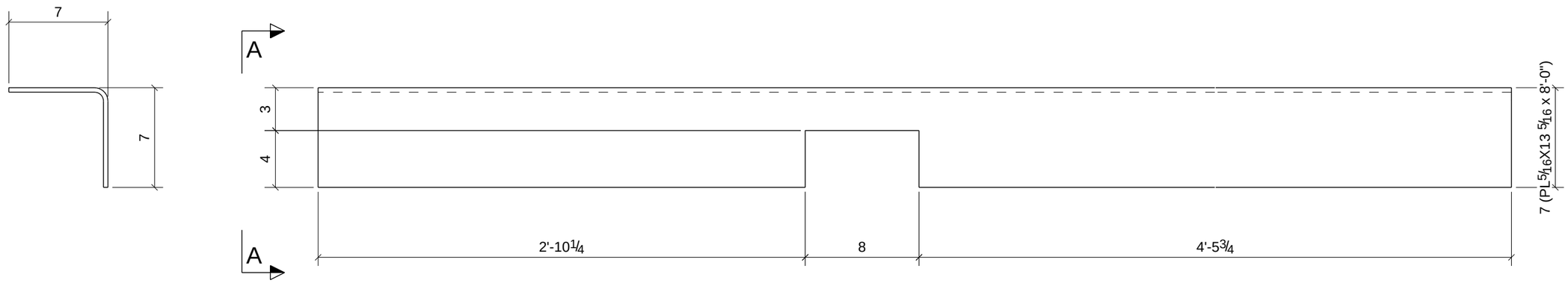

A - A

PROCESS CONTROL
PROCESS BY
FAB: _____
FIT AND WELD: _____
INSPECTION: _____
OTHER (IF NEEDED) _____
_____ : _____
_____ : _____
_____ : _____
_____ : _____
REFERENCE LATEST ERECTION DRAWINGS FOR MATERIAL & FABRICATION INFORMATION

ONE - BENT PLATE - M8

DATE	NO.	DESCRIPTION	BY
5/28/11	B	For Checking	TMc
5/16/11	A	For Approval	TMc

BILL OF MATERIAL

Qty Ea.	Qty Tot	Piece Mark	Description	Length	Weight Total	Remarks	Adv Mill #	Steel Grade
	1	M8	BENT PLATE					
	1		PL5/16"X13 5/16"	8'-0"	111	SQ-2		A36

STEEL ASTM	A992	UNO
ELECTRODES	E70XX L.H.	UNO
WELDS	1/4" FILLET	UNO
OPEN HOLES	13/16" UNO	FINISH PER SPECS
BOLTS	3/4" A325N	UNO
PAINT	1 S/C STD PRIMER U.N.O.	UNO

PROJECT NAME
OLDE ORCHARD ELEMENTARY SCHOOL

LOCATION
800 McNAUGHTEN RD. COLUMBUS, OHIO 43213

CONTRACTOR
THOMAS AND MARKER CONSTRUCTION

ARCHITECT
BRAUN & STEIDL

North Central Fabrication, Ltd.
NORTH CENTRAL FABRICATION
Mansfield, OH 44906
419-529-2744 FAX 419-529-5387 http://www.northcentralfab
AISC CERTIFIED FABRICATOR

DESCRIPTION	DATE	DATE	JOB No.
BENT PLATE	05/18/2011		70234
	DRAWN BY TMc	CHECKED BY TAN	DRG No. M8

PHASE				
1	2	3	4	5
1	0	0	0	0

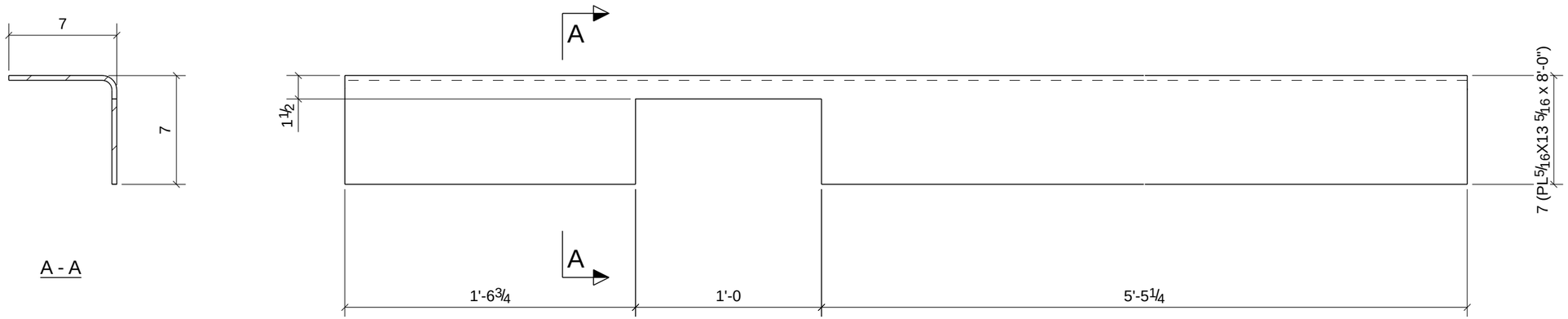

PROCESS CONTROL
PROCESS BY
FAB: _____
FIT AND WELD: _____
INSPECTION: _____
OTHER (IF NEEDED)
_____ : _____
_____ : _____
_____ : _____
_____ : _____
_____ : _____
REFERENCE LATEST ERECTION DRAWINGS FOR MATERIAL & FABRICATION INFORMATION

ONE - BENT PLATE - M9

DATE	NO.	DESCRIPTION	BY
5/28/11	B	For Checking	TMc
5/16/11	A	For Approval	TMc

BILL OF MATERIAL

Qty Ea.	Qty Tot	Piece Mark	Description	Length	Weight Total	Remarks	Adv Mill #	Steel Grade
	1	M9	BENT PLATE					
	1		PL5/16"X13 5/16"	8'-0"	108	SQ-2		A36

STEEL ASTM	A992	UNO
ELECTRODES	E70XX L.H.	UNO
WELDS	1/4" FILLET	UNO
OPEN HOLES	13/16" UNO	FINISH PER SPECS
BOLTS	3/4" A325N	UNO
PAINT	1 S/C STD PRIMER U.N.O.	UNO

PROJECT NAME
OLDE ORCHARD ELEMENTARY SCHOOL

LOCATION
800 McNAUGHTEN RD. COLUMBUS, OHIO 43213

CONTRACTOR
THOMAS AND MARKER CONSTRUCTION

ARCHITECT
BRAUN & STEIDL

North Central Fabrication, Ltd.
NORTH CENTRAL FABRICATION
Mansfield, OH 44906
419-529-2744 FAX 419-529-5387 http://www.northcentralfab

AISC CERTIFIED FABRICATOR

DESCRIPTION	DATE	DATE	JOB No.
BENT PLATE	05/18/2011		70234
	DRAWN BY TMc	CHECKED BY TAN	DRG No. M9

PHASE				
1	2	3	4	5
1	0	0	0	0

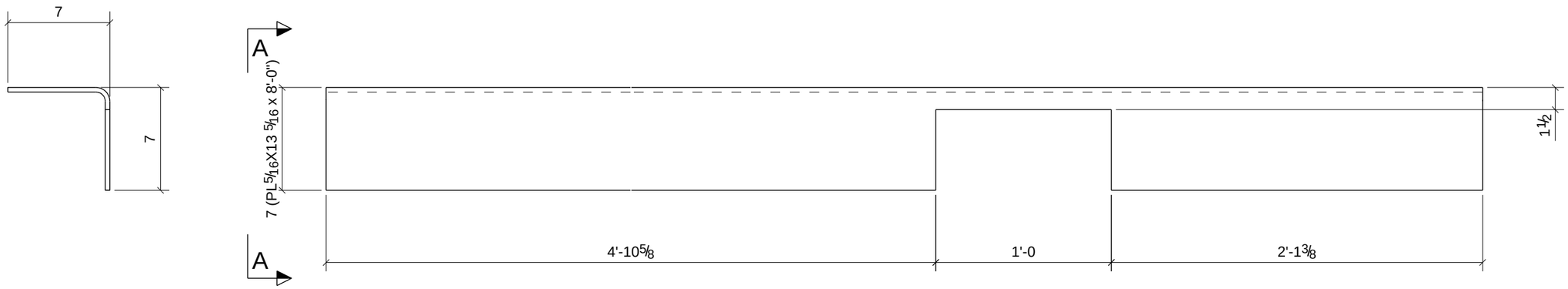

A - A

PROCESS CONTROL
PROCESS BY
FAB: _____
FIT AND WELD: _____
INSPECTION: _____
OTHER (IF NEEDED)
_____ : _____
_____ : _____
_____ : _____
_____ : _____
_____ : _____
REFERENCE LATEST ERECTION DRAWINGS FOR MATERIAL & FABRICATION INFORMATION

ONE - BENT PLATE - M25

DATE	NO.	DESCRIPTION	BY
5/28/11	B	For Checking	TMc
5/16/11	A	For Approval	TMc

BILL OF MATERIAL

Qty Ea.	Qty Tot	Piece Mark	Description	Length	Weight Total	Remarks	Adv Mill #	Steel Grade
	1	M25	BENT PLATE					
	1		PL5/16"X13 5/16"	8'-0"	108	SQ-2		A36

STEEL ASTM	A992	UNO
ELECTRODES	E70XX L.H.	UNO
WELDS	1/4" FILLET	UNO
OPEN HOLES	13/16" UNO	FINISH PER SPECS
BOLTS	3/4" A325N	UNO
PAINT	1 S/C STD PRIMER U.N.O.	UNO

PROJECT NAME
OLDE ORCHARD ELEMENTARY SCHOOL

LOCATION
800 McNAUGHTEN RD. COLUMBUS, OHIO 43213

CONTRACTOR
THOMAS AND MARKER CONSTRUCTION

ARCHITECT
BRAUN & STEIDL

North Central Fabrication, Ltd.

NORTH CENTRAL FABRICATION
Mansfield, OH 44906
419-529-2744 FAX 419-529-5387 http://www.northcentralfab

AISC CERTIFIED FABRICATOR

DESCRIPTION	DATE		JOB No.
BENT PLATE	05/18/2011		70234
	DRAWN BY TMc	CHECKED BY TAN	DRG No. M25

PHASE				
1	2	3	4	5
1	0	0	0	0

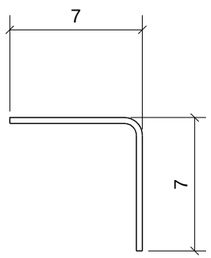

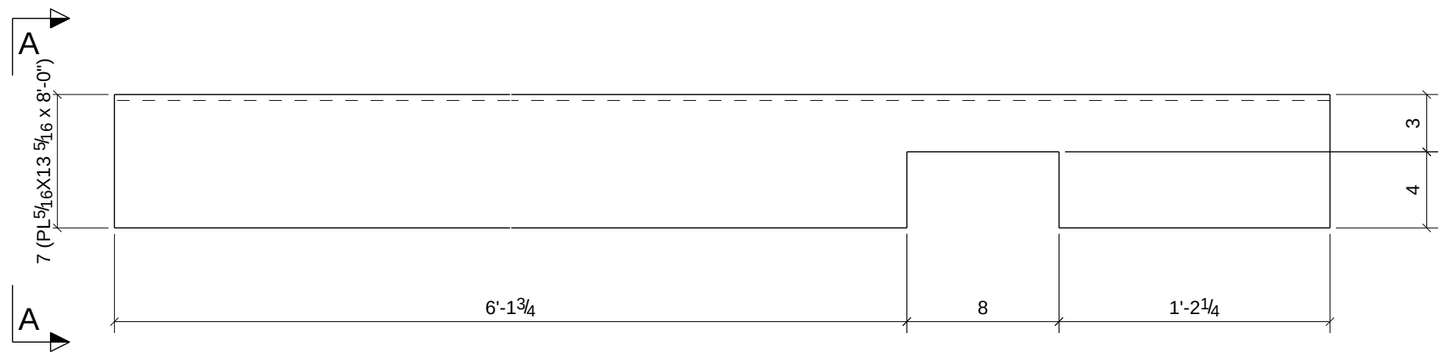

A - A

ONE - BENT PLATE - M26

PROCESS CONTROL
PROCESS BY
FAB: _____
FIT AND WELD: _____
INSPECTION: _____
OTHER (IF NEEDED)
_____ : _____
_____ : _____
_____ : _____
_____ : _____
_____ : _____
REFERENCE LATEST ERECTION DRAWINGS FOR MATERIAL & FABRICATION INFORMATION

DATE	NO.	DESCRIPTION	BY
5/28/11	B	For Checking	TMc
5/16/11	A	For Approval	TMc

BILL OF MATERIAL

Qty Ea.	Qty Tot	Piece Mark	Description	Length	Weight Total	Remarks	Adv Mill #	Steel Grade
	1	M26	BENT PLATE					
	1		PL5/16"X13 5/16"	8'-0"	111	SQ-2		A36

STEEL ASTM	A992	UNO
ELECTRODES	E70XX L.H.	UNO
WELDS	1/4" FILLET	UNO
OPEN HOLES	13/16" UNO	FINISH PER SPECS
BOLTS	3/4" A325N	UNO
PAINT	1 S/C STD PRIMER U.N.O.	UNO

PROJECT NAME
OLDE ORCHARD ELEMENTARY SCHOOL

LOCATION
800 McNAUGHTEN RD. COLUMBUS, OHIO 43213

CONTRACTOR
THOMAS AND MARKER CONSTRUCTION

ARCHITECT
BRAUN & STEIDL

North Central Fabrication, Ltd.
NORTH CENTRAL FABRICATION
Mansfield, OH 44906
419-529-2744 FAX 419-529-5387 http://www.northcentralfab
AISC CERTIFIED FABRICATOR

DESCRIPTION	DATE	DATE	JOB No.
BENT PLATE	05/18/2011		70234
	DRAWN BY TMc	CHECKED BY TAN	DRG No. M26

PHASE				
1	2	3	4	5
1	0	0	0	0

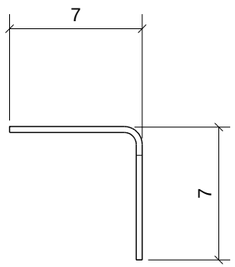

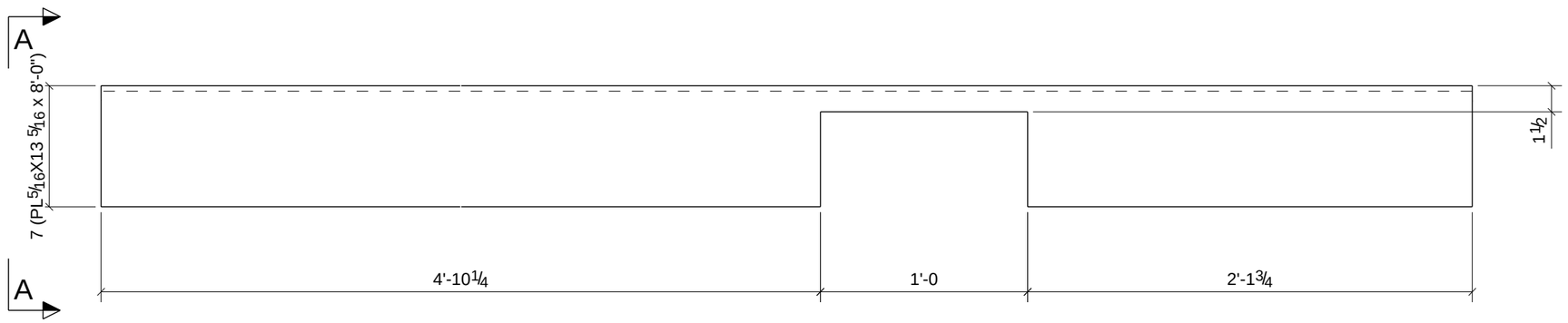

A - A

PROCESS CONTROL
PROCESS BY
FAB: _____
FIT AND WELD: _____
INSPECTION: _____
OTHER (IF NEEDED)
_____ : _____
_____ : _____
_____ : _____
_____ : _____
_____ : _____
REFERENCE LATEST ERECTION DRAWINGS FOR MATERIAL & FABRICATION INFORMATION

ONE - BENT PLATE - M28

DATE	NO.	DESCRIPTION	BY
5/28/11	B	For Checking	TMc
5/16/11	A	For Approval	TMc

BILL OF MATERIAL

Qty Ea.	Qty Tot	Piece Mark	Description	Length	Weight Total	Remarks	Adv Mill #	Steel Grade
	1	M28	BENT PLATE					
	1		PL5/16"X13 5/16"	8'-0"	108	SQ-2		A36

STEEL ASTM	A992	UNO
ELECTRODES	E70XX L.H.	UNO
WELDS	1/4" FILLET	UNO
OPEN HOLES	13/16" UNO	FINISH PER SPECS
BOLTS	3/4" A325N	UNO
PAINT	1 S/C STD PRIMER U.N.O.	UNO

PROJECT NAME
OLDE ORCHARD ELEMENTARY SCHOOL

LOCATION
800 McNAUGHTEN RD. COLUMBUS, OHIO 43213

CONTRACTOR
THOMAS AND MARKER CONSTRUCTION

ARCHITECT
BRAUN & STEIDL

North Central Fabrication, Ltd.
NORTH CENTRAL FABRICATION
Mansfield, OH 44906
419-529-2744 FAX 419-529-5387 http://www.northcentralfab
AISC CERTIFIED FABRICATOR

DESCRIPTION	DATE		JOB No.
BENT PLATE	05/18/2011		70234
	DRAWN BY TMc	CHECKED BY TAN	DRG No. M28

PHASE				
1	2	3	4	5
1	0	0	0	0

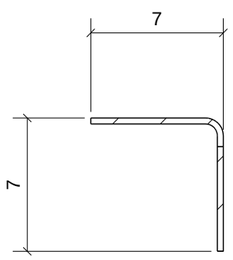

A - A

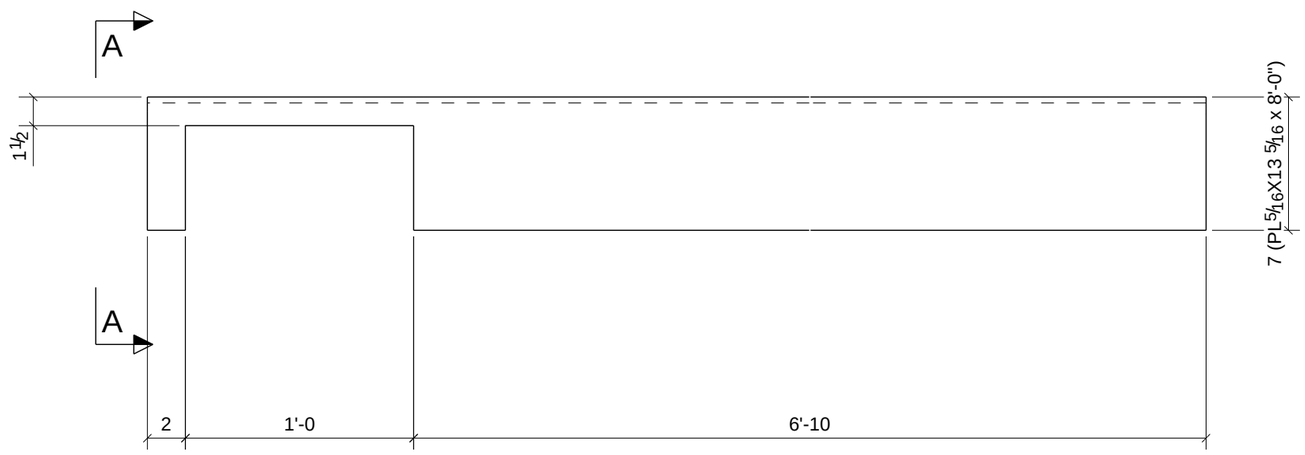

PROCESS CONTROL
PROCESS BY
FAB: _____
FIT AND WELD: _____
INSPECTION: _____
OTHER (IF NEEDED)
_____ : _____
_____ : _____
_____ : _____
_____ : _____
REFERENCE LATEST ERECTION DRAWINGS FOR MATERIAL & FABRICATION INFORMATION

ONE - BENT PLATE - M29

DATE	NO.	DESCRIPTION	BY
5/28/11	B	For Checking	TMc
5/16/11	A	For Approval	TMc

BILL OF MATERIAL

Qty Ea.	Qty Tot	Piece Mark	Description	Length	Weight Total	Remarks	Adv Mill #	Steel Grade
	1	M29	BENT PLATE					
	1		PL5/16"X13 5/16"	8'-0"	108	SQ-2		A36

STEEL ASTM	A992	UNO
ELECTRODES	E70XX L.H.	UNO
WELDS	1/4" FILLET	UNO
OPEN HOLES	13/16" UNO	FINISH PER SPECS
BOLTS	3/4" A325N	UNO
PAINT	1 S/C STD PRIMER U.N.O.	UNO

PROJECT NAME
OLDE ORCHARD ELEMENTARY SCHOOL

LOCATION
800 McNAUGHTEN RD. COLUMBUS, OHIO 43213

CONTRACTOR
THOMAS AND MARKER CONSTRUCTION

ARCHITECT
BRAUN & STEIDL

North Central Fabrication, Ltd.

NORTH CENTRAL FABRICATION
Mansfield, OH 44906
419-529-2744 FAX 419-529-5387 http://www.northcentralfab

AISC CERTIFIED FABRICATOR

DESCRIPTION	DATE		JOB No.
BENT PLATE	05/18/2011		70234
	DRAWN BY TMc	CHECKED BY TAN	DRG No. M29

PHASE				
1	2	3	4	5
1	0	0	0	0

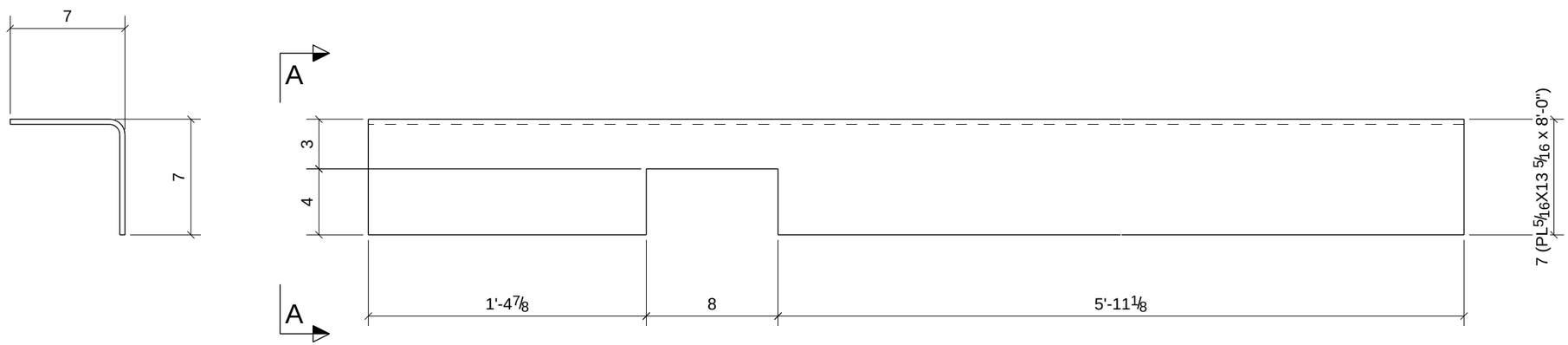

A - A

PROCESS CONTROL
PROCESS BY
FAB: _____
FIT AND WELD: _____
INSPECTION: _____
OTHER (IF NEEDED)
_____ : _____
_____ : _____
_____ : _____
_____ : _____
_____ : _____
REFERENCE LATEST ERECTION DRAWINGS FOR MATERIAL & FABRICATION INFORMATION

ONE - BENT PLATE - M32

DATE	NO.	DESCRIPTION	BY
5/28/11	B	For Checking	TMc
5/16/11	A	For Approval	TMc

BILL OF MATERIAL

Qty Ea.	Qty Tot	Piece Mark	Description	Length	Weight Total	Remarks	Adv Mill #	Steel Grade
	1	M32	BENT PLATE					
	1		PL5/16"X13 5/16"	8'-0"	111	SQ-2		A36

STEEL ASTM	A992	UNO
ELECTRODES	E70XX L.H.	UNO
WELDS	1/4" FILLET	UNO
OPEN HOLES	13/16" UNO	FINISH PER SPECS
BOLTS	3/4" A325N	UNO
PAINT	1 S/C STD PRIMER U.N.O.	UNO

PROJECT NAME
OLDE ORCHARD ELEMENTARY SCHOOL
LOCATION
800 McNAUGHTEN RD. COLUMBUS, OHIO 43213
CONTRACTOR
THOMAS AND MARKER CONSTRUCTION
ARCHITECT
BRAUN & STEIDL

North Central Fabrication, Ltd.
NORTH CENTRAL FABRICATION
Mansfield, OH 44906
419-529-2744 FAX 419-529-5387 http://www.northcentralfab
AISC CERTIFIED FABRICATOR

DESCRIPTION	DATE		JOB No.
BENT PLATE	05/18/2011	DATE	70234
	DRAWN BY TMc	CHECKED BY TAN	DRG No. M32

PHASE				
1	2	3	4	5
1	0	0	0	0

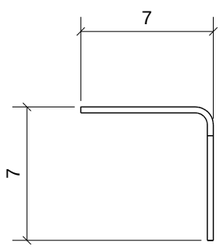

A - A

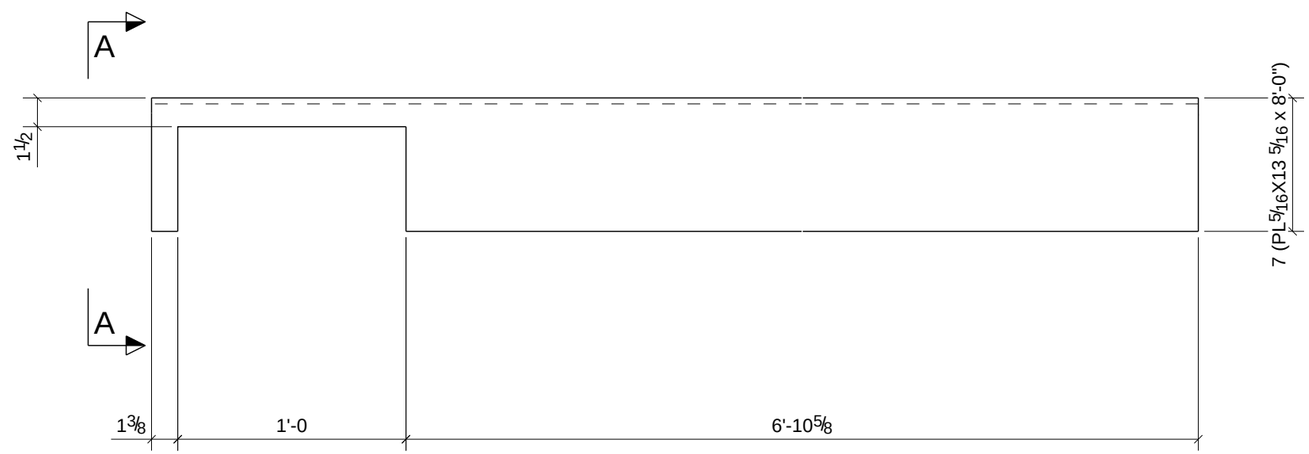

PROCESS CONTROL
PROCESS BY
FAB: _____
FIT AND WELD: _____
INSPECTION: _____
OTHER (IF NEEDED) _____
_____ : _____
_____ : _____
_____ : _____
_____ : _____
REFERENCE LATEST ERECTION DRAWINGS FOR MATERIAL & FABRICATION INFORMATION

ONE - BENT PLATE - M34

DATE	NO.	DESCRIPTION	BY
5/28/11	B	For Checking	TMc
5/16/11	A	For Approval	TMc

BILL OF MATERIAL

Qty Ea.	Qty Tot	Piece Mark	Description	Length	Weight Total	Remarks	Adv Mill #	Steel Grade
	1	M34	BENT PLATE					
	1		PL5/16"X13 5/16"	8'-0"	108	SQ-2		A36

STEEL ASTM	A992	UNO
ELECTRODES	E70XX L.H.	UNO
WELDS	1/4" FILLET	UNO
OPEN HOLES	13/16" UNO	FINISH PER SPECS
BOLTS	3/4" A325N	UNO
PAINT	1 S/C STD PRIMER U.N.O.	UNO

PROJECT NAME
OLDE ORCHARD ELEMENTARY SCHOOL

LOCATION
800 McNAUGHTEN RD. COLUMBUS, OHIO 43213

CONTRACTOR
THOMAS AND MARKER CONSTRUCTION

ARCHITECT
BRAUN & STEIDL

North Central Fabrication, Ltd.
NORTH CENTRAL FABRICATION
Mansfield, OH 44906
419-529-2744 FAX 419-529-5387 http://www.northcentralfab

AISC CERTIFIED FABRICATOR

DESCRIPTION	DATE	DATE	JOB No.
BENT PLATE	05/18/2011		70234
	DRAWN BY TMc	CHECKED BY TAN	DRG No. M34

PHASE				
1	2	3	4	5
1	0	0	0	0

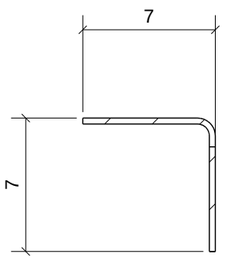

A - A

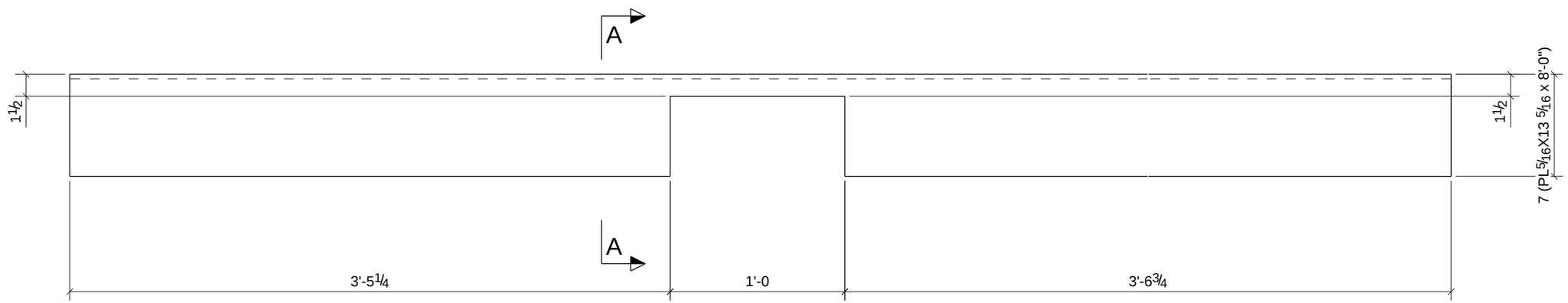

ONE - BENT PLATE - M35

PROCESS CONTROL
PROCESS BY
FAB: _____
FIT AND WELD: _____
INSPECTION: _____
OTHER (IF NEEDED)
_____ : _____
_____ : _____
_____ : _____
_____ : _____
REFERENCE LATEST ERECTION DRAWINGS FOR MATERIAL & FABRICATION INFORMATION

DATE	NO.	DESCRIPTION	BY
5/28/11	B	For Checking	TMc
5/16/11	A	For Approval	TMc

BILL OF MATERIAL

Qty Ea.	Qty Tot	Piece Mark	Description	Length	Weight Total	Remarks	Adv Mill #	Steel Grade
	1	M35	BENT PLATE					
	1		PL5/16"X13 5/16"	8'-0"	108	SQ-2		A36

STEEL ASTM	A992	UNO
ELECTRODES	E70XX L.H.	UNO
WELDS	1/4" FILLET	UNO
OPEN HOLES	13/16" UNO	FINISH PER SPECS
BOLTS	3/4" A325N	UNO
PAINT	1 S/C STD PRIMER U.N.O.	UNO

PROJECT NAME
OLDE ORCHARD ELEMENTARY SCHOOL

LOCATION
800 McNAUGHTEN RD. COLUMBUS, OHIO 43213

CONTRACTOR
THOMAS AND MARKER CONSTRUCTION

ARCHITECT
BRAUN & STEIDL

North Central Fabrication, Ltd.
NORTH CENTRAL FABRICATION
Mansfield, OH 44906
419-529-2744 FAX 419-529-5387 http://www.northcentralfab
AISC CERTIFIED FABRICATOR

DESCRIPTION	DATE	DATE	JOB No.
BENT PLATE	05/18/2011		70234
	DRAWN BY TMc	CHECKED BY TAN	DRG No. M35

PHASE				
1	2	3	4	5
1	0	0	0	0

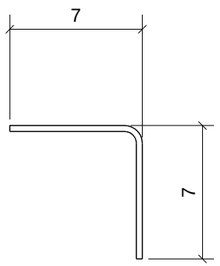

A - A

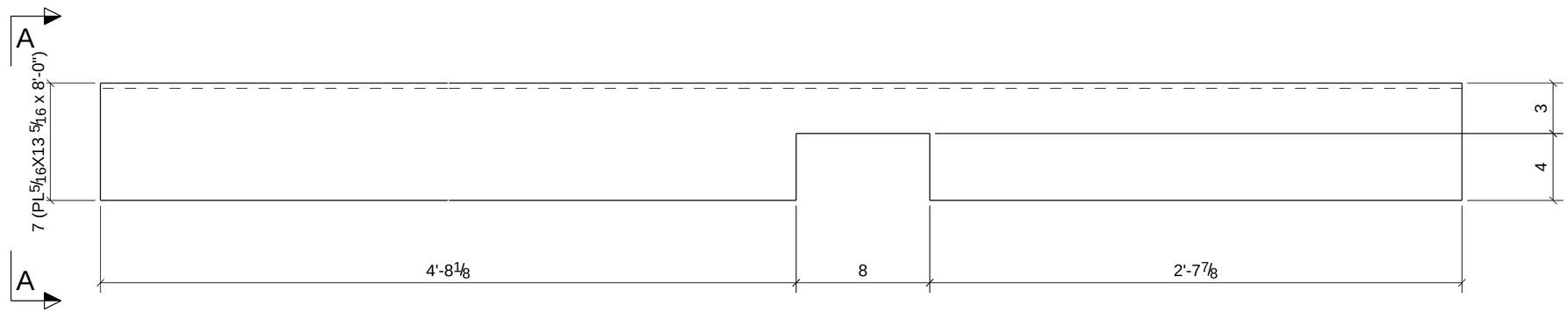

ONE - BENT PLATE - M39

PROCESS CONTROL
PROCESS BY
FAB: _____
FIT AND WELD: _____
INSPECTION: _____
OTHER (IF NEEDED)
_____ : _____
_____ : _____
_____ : _____
_____ : _____
_____ : _____
REFERENCE LATEST ERECTION DRAWINGS FOR MATERIAL & FABRICATION INFORMATION

DATE	NO.	DESCRIPTION	BY
5/28/11	B	For Checking	TMc
5/16/11	A	For Approval	TMc

BILL OF MATERIAL

Qty Ea.	Qty Tot	Piece Mark	Description	Length	Weight Total	Remarks	Adv Mill #	Steel Grade
	1	M39	BENT PLATE					
	1		PL5/16"X13 5/16"	8'-0"	111	SQ-2		A36

STEEL ASTM	A992	UNO
ELECTRODES	E70XX L.H.	UNO
WELDS	1/4" FILLET	UNO
OPEN HOLES	13/16" UNO	FINISH PER SPECS
BOLTS	3/4" A325N	UNO
PAINT	1 S/C STD PRIMER U.N.O.	UNO

PROJECT NAME
OLDE ORCHARD ELEMENTARY SCHOOL
LOCATION
800 McNAUGHTEN RD. COLUMBUS, OHIO 43213
CONTRACTOR
THOMAS AND MARKER CONSTRUCTION
ARCHITECT
BRAUN & STEIDL

North Central Fabrication, Ltd.
NORTH CENTRAL FABRICATION
Mansfield, OH 44906
419-529-2744 FAX 419-529-5387 http://www.northcentralfab
AISC CERTIFIED FABRICATOR

DESCRIPTION	DATE		JOB No.
BENT PLATE	05/18/2011		70234
	DRAWN BY TMc	CHECKED BY TAN	DRG No. M39

PHASE				
1	2	3	4	5
1	0	0	0	0

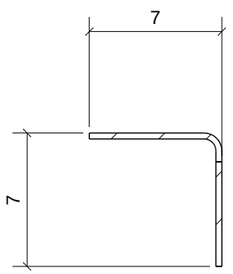

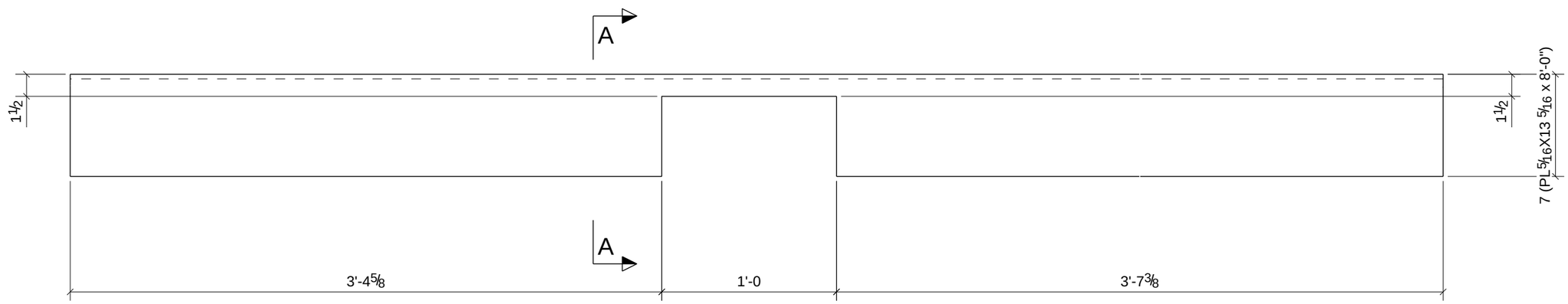

A - A

PROCESS CONTROL
PROCESS BY
FAB: _____
FIT AND WELD: _____
INSPECTION: _____
OTHER (IF NEEDED) _____
_____ : _____
_____ : _____
_____ : _____
_____ : _____
REFERENCE LATEST ERECTION DRAWINGS FOR MATERIAL & FABRICATION INFORMATION

ONE - BENT PLATE - M40

DATE	NO.	DESCRIPTION	BY
5/28/11	B	For Checking	TMc
5/16/11	A	For Approval	TMc

BILL OF MATERIAL

Qty Ea.	Qty Tot	Piece Mark	Description	Length	Weight Total	Remarks	Adv Mill #	Steel Grade
	1	M40	BENT PLATE					
	1		PL5/16"X13 5/16"	8'-0"	108	SQ-2		A36

STEEL ASTM	A992	UNO
ELECTRODES	E70XX L.H.	UNO
WELDS	1/4" FILLET	UNO
OPEN HOLES	13/16" UNO	FINISH PER SPECS
BOLTS	3/4" A325N	UNO
PAINT	1 S/C STD PRIMER U.N.O.	UNO

PROJECT NAME
OLDE ORCHARD ELEMENTARY SCHOOL

LOCATION
800 McNAUGHTEN RD. COLUMBUS, OHIO 43213

CONTRACTOR
THOMAS AND MARKER CONSTRUCTION

ARCHITECT
BRAUN & STEIDL

North Central Fabrication, Ltd.
NORTH CENTRAL FABRICATION
Mansfield, OH 44906
419-529-2744 FAX 419-529-5387 http://www.northcentralfab
AISC CERTIFIED FABRICATOR

DESCRIPTION	DATE	DATE	JOB No.
BENT PLATE	05/18/2011		70234
	DRAWN BY TMc	CHECKED BY TAN	DRG No. M40

PHASE				
1	2	3	4	5
1	0	0	0	0

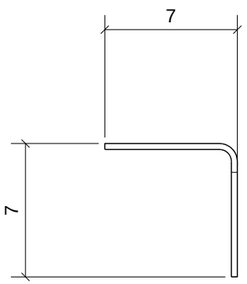

A - A

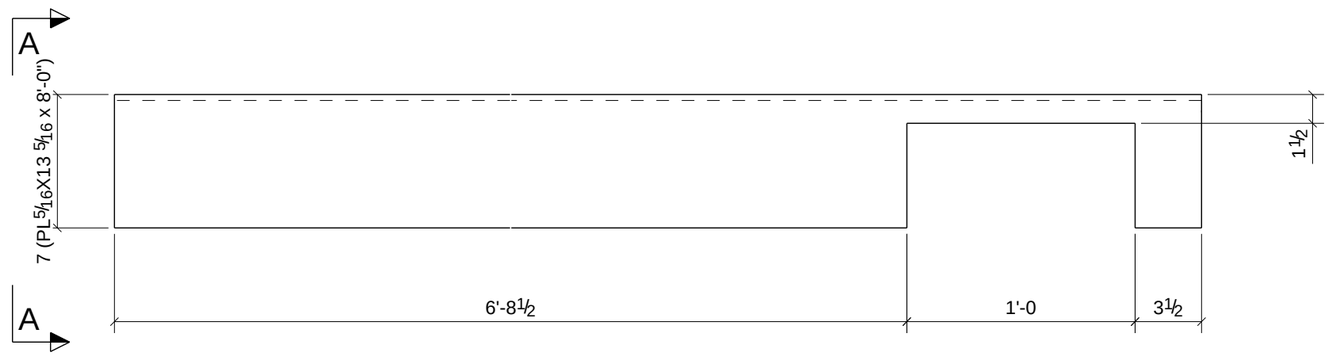

ONE - BENT PLATE - M41

PROCESS CONTROL
PROCESS BY
FAB: _____
FIT AND WELD: _____
INSPECTION: _____
OTHER (IF NEEDED)
_____ : _____
_____ : _____
_____ : _____
_____ : _____
_____ : _____
REFERENCE LATEST ERECTION DRAWINGS FOR MATERIAL & FABRICATION INFORMATION

DATE	NO.	DESCRIPTION	BY
5/28/11	B	For Checking	TMc
5/16/11	A	For Approval	TMc

BILL OF MATERIAL

Qty Ea.	Qty Tot	Piece Mark	Description	Length	Weight Total	Remarks	Adv Mill #	Steel Grade
	1	M41	BENT PLATE					
	1		PL5/16"X13 5/16"	8'-0"	108	SQ-2		A36

STEEL ASTM	A992	UNO
ELECTRODES	E70XX L.H.	UNO
WELDS	1/4" FILLET	UNO
OPEN HOLES	13/16" UNO	FINISH PER SPECS
BOLTS	3/4" A325N	UNO
PAINT	1 S/C STD PRIMER U.N.O.	UNO

PROJECT NAME
OLDE ORCHARD ELEMENTARY SCHOOL

LOCATION
800 McNAUGHTEN RD. COLUMBUS, OHIO 43213

CONTRACTOR
THOMAS AND MARKER CONSTRUCTION

ARCHITECT
BRAUN & STEIDL

North Central Fabrication, Ltd.
NORTH CENTRAL FABRICATION
Mansfield, OH 44906
419-529-2744 FAX 419-529-5387 http://www.northcentralfab
AISC CERTIFIED FABRICATOR

DESCRIPTION	DATE		JOB No.
BENT PLATE	05/18/2011		70234
	DRAWN BY TMc	CHECKED BY TAN	DRG No. M41

PHASE				
1	2	3	4	5
1	0	0	0	0

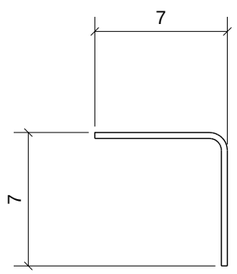

A - A

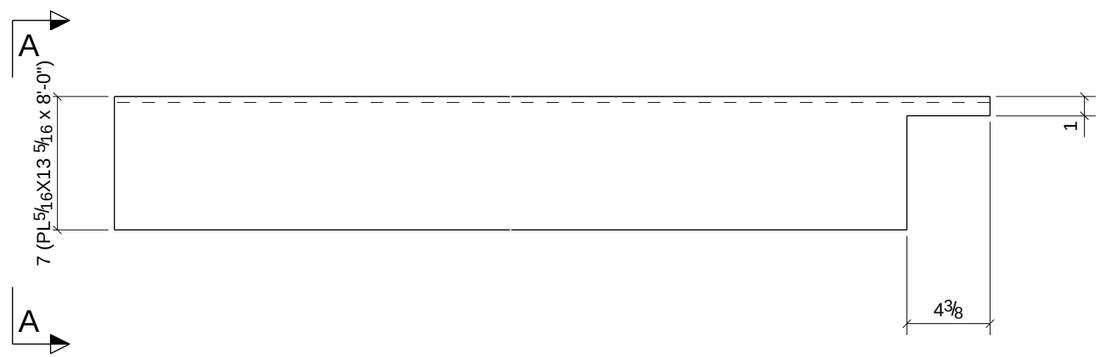

ONE - BENT PLATE - M44

PROCESS CONTROL
PROCESS BY
FAB: _____
FIT AND WELD: _____
INSPECTION: _____
OTHER (IF NEEDED) _____
_____ : _____
_____ : _____
_____ : _____
_____ : _____
REFERENCE LATEST ERECTION DRAWINGS FOR MATERIAL & FABRICATION INFORMATION

DATE	NO.	DESCRIPTION	BY
5/28/11	B	For Checking	TMc
5/16/11	A	For Approval	TMc

BILL OF MATERIAL

Qty Ea.	Qty Tot	Piece Mark	Description	Length	Weight Total	Remarks	Adv Mill #	Steel Grade
	1	M44	BENT PLATE					
	1		PL5/16"X13 5/16"	8'-0"	111	SQ-2		A36

STEEL ASTM	A992	UNO
ELECTRODES	E70XX L.H.	UNO
WELDS	1/4" FILLET	UNO
OPEN HOLES	13/16" UNO	FINISH PER SPECS
BOLTS	3/4" A325N	UNO
PAINT	1 S/C STD PRIMER U.N.O.	UNO

PROJECT NAME
OLDE ORCHARD ELEMENTARY SCHOOL

LOCATION
800 McNAUGHTEN RD. COLUMBUS, OHIO 43213

CONTRACTOR
THOMAS AND MARKER CONSTRUCTION

ARCHITECT
BRAUN & STEIDL

North Central Fabrication, Ltd.
NORTH CENTRAL FABRICATION
Mansfield, OH 44906
419-529-2744 FAX 419-529-5387 http://www.northcentralfab
AISC CERTIFIED FABRICATOR

DESCRIPTION	DATE	DATE	JOB No.
BENT PLATE	05/18/2011		70234
	DRAWN BY TMc	CHECKED BY TAN	DRG No. M44

PHASE				
1	2	3	4	5
1	0	0	0	0

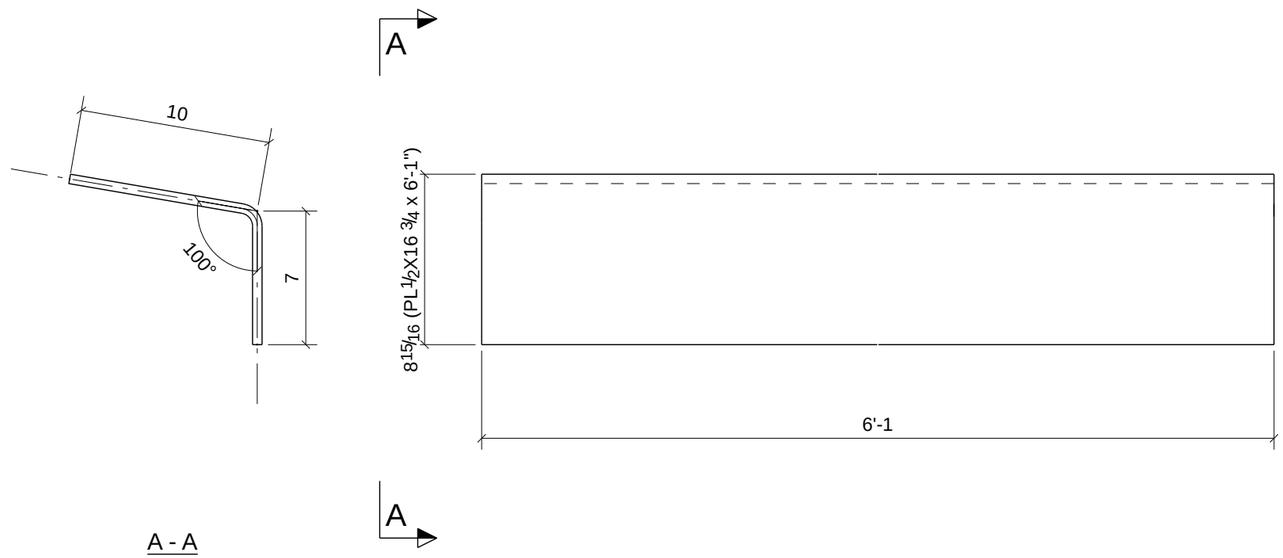

PROCESS CONTROL
PROCESS BY
FAB: _____
FIT AND WELD: _____
INSPECTION: _____
OTHER (IF NEEDED) _____
_____ : _____
_____ : _____
_____ : _____
_____ : _____
REFERENCE LATEST ERECTION DRAWINGS FOR MATERIAL & FABRICATION INFORMATION

ONE - PLATE - M91

DATE	NO.	DESCRIPTION	BY
5/28/11	B	For Checking	TMc
5/16/11	A	For Approval	TMc

BILL OF MATERIAL

Qty Ea.	Qty Tot	Piece Mark	Description	Length	Weight Total	Remarks	Adv Mill #	Steel Grade
	1	M91	PLATE					
	1		PL1/2"X16 3/4"	6'-1"	173	BEV-2		A36

STEEL ASTM	A992	UNO
ELECTRODES	E70XX L.H.	UNO
WELDS	1/4" FILLET	UNO
OPEN HOLES	13/16" UNO	FINISH PER SPECS
BOLTS	3/4" A325N	UNO
PAINT	1 S/C STD PRIMER U.N.O.	UNO

PROJECT NAME
OLDE ORCHARD ELEMENTARY SCHOOL

LOCATION
800 McNAUGHTEN RD. COLUMBUS, OHIO 43213

CONTRACTOR
THOMAS AND MARKER CONSTRUCTION

ARCHITECT
BRAUN & STEIDL

North Central Fabrication, Ltd.
NORTH CENTRAL FABRICATION
Mansfield, OH 44906
419-529-2744 FAX 419-529-5387 http://www.northcentralfab
AISC CERTIFIED FABRICATOR

DESCRIPTION	DATE	DATE	JOB No.
BENT PLATE	05/18/2011		70234
	DRAWN BY TMc	CHECKED BY TAN	DRG No. M91

PHASE				
1	2	3	4	5
3	0	0	0	0

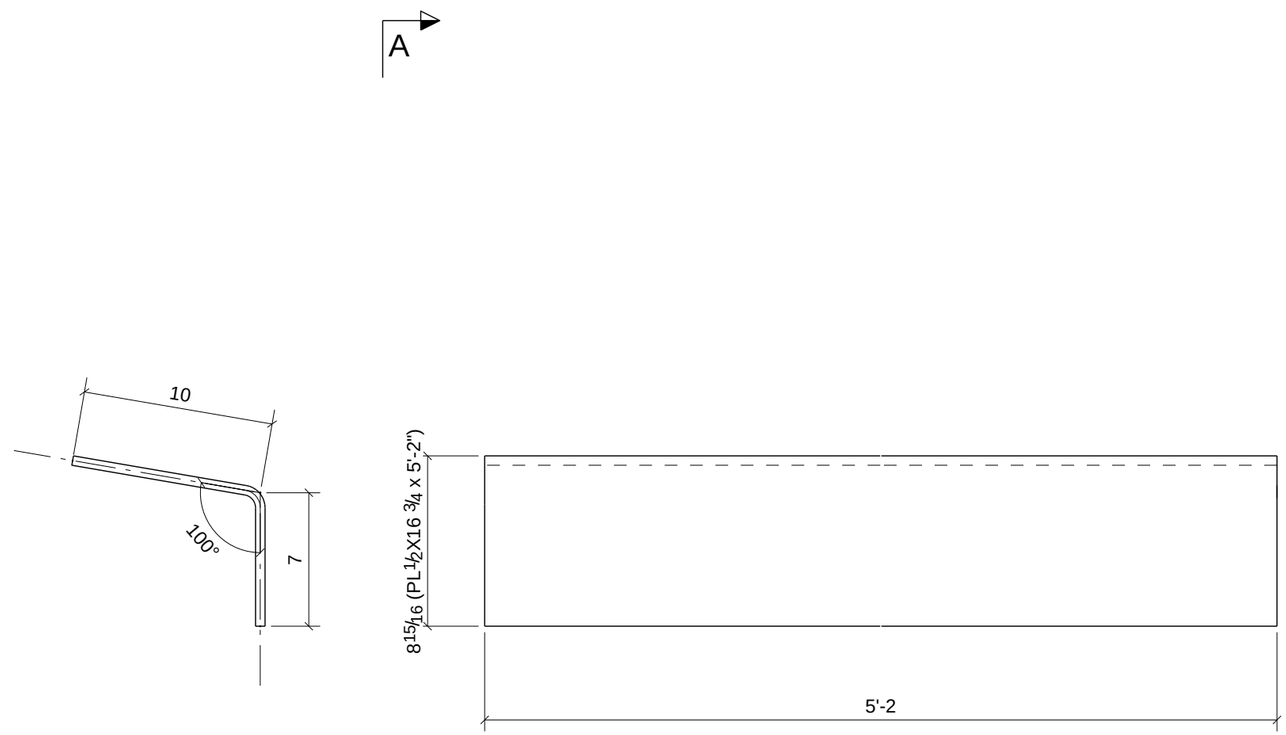

A - A

3 - PLATES - M95

PROCESS CONTROL
PROCESS BY
FAB: _____
FIT AND WELD: _____
INSPECTION: _____
OTHER (IF NEEDED) _____
_____ : _____
_____ : _____
_____ : _____
_____ : _____
REFERENCE LATEST ERECTION DRAWINGS FOR MATERIAL & FABRICATION INFORMATION

BILL OF MATERIAL

Qty Ea.	Qty Tot	Piece Mark	Description	Length	Weight Total	Remarks	Adv Mill #	Steel Grade
	3	M95	PLATES					
	3		PL1/2"X16 3/4"	5'-2"	442	BEV-2		A36

STEEL ASTM	A992	UNO
ELECTRODES	E70XX L.H.	UNO
WELDS	1/4" FILLET	UNO
OPEN HOLES	13/16" UNO	FINISH PER SPECS
BOLTS	3/4" A325N	UNO
PAINT	1 S/C STD PRIMER U.N.O.	UNO

PROJECT NAME
OLDE ORCHARD ELEMENTARY SCHOOL

LOCATION
800 McNAUGHTEN RD. COLUMBUS, OHIO 43213

CONTRACTOR
THOMAS AND MARKER CONSTRUCTION

ARCHITECT
BRAUN & STEIDL

DATE	NO.	DESCRIPTION	BY
5/28/11	B	For Checking	TMc
5/16/11	A	For Approval	TMc

North Central Fabrication, Ltd.

NORTH CENTRAL FABRICATION
Mansfield, OH 44906
419-529-2744 FAX 419-529-5387 http://www.northcentralfab

AISC CERTIFIED FABRICATOR

DESCRIPTION	DATE	DATE	JOB No.
BENT PLATE	05/18/2011		70234
	DRAWN BY TMc	CHECKED BY TAN	DRG No. M95

PHASE				
1	2	3	4	5
1	0	0	0	0

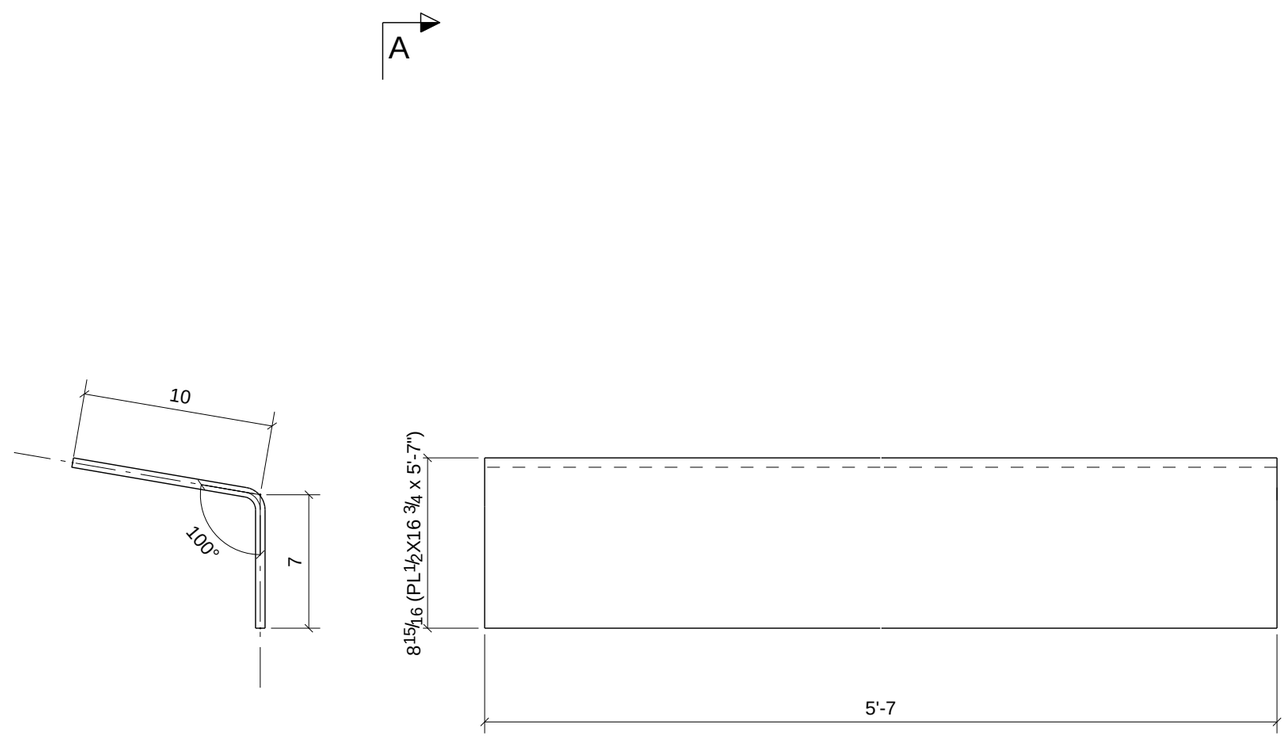

A - A

ONE - PLATE - M111

PROCESS CONTROL
PROCESS BY
FAB: _____
FIT AND WELD: _____
INSPECTION: _____
OTHER (IF NEEDED) _____
_____ : _____
_____ : _____
_____ : _____
_____ : _____
REFERENCE LATEST ERECTION DRAWINGS FOR MATERIAL & FABRICATION INFORMATION

DATE	NO.	DESCRIPTION	BY
5/28/11	B	For Checking	TMc
5/16/11	A	For Approval	TMc

BILL OF MATERIAL

Qty Ea.	Qty Tot	Piece Mark	Description	Length	Weight Total	Remarks	Adv Mill #	Steel Grade
	1	M111	PLATE					
	1		PL1/2"X16 3/4"	5'-7"	159	BEV-2		A36

STEEL ASTM	A992	UNO
ELECTRODES	E70XX L.H.	UNO
WELDS	1/4" FILLET	UNO
OPEN HOLES	13/16" UNO	FINISH PER SPECS
BOLTS	3/4" A325N	UNO
PAINT	1 S/C STD PRIMER U.N.O.	UNO

PROJECT NAME
OLDE ORCHARD ELEMENTARY SCHOOL

LOCATION
800 McNAUGHTEN RD. COLUMBUS, OHIO 43213

CONTRACTOR
THOMAS AND MARKER CONSTRUCTION

ARCHITECT
BRAUN & STEIDL

North Central Fabrication, Ltd.
NORTH CENTRAL FABRICATION
Mansfield, OH 44906
419-529-2744 FAX 419-529-5387 http://www.northcentralfab
AISC CERTIFIED FABRICATOR

DESCRIPTION	DATE	DATE	JOB No.
BENT PLATE	05/18/2011		70234
	DRAWN BY TMc	CHECKED BY TAN	DRG No. M111

PHASE				
1	2	3	4	5
12	0	0	0	0

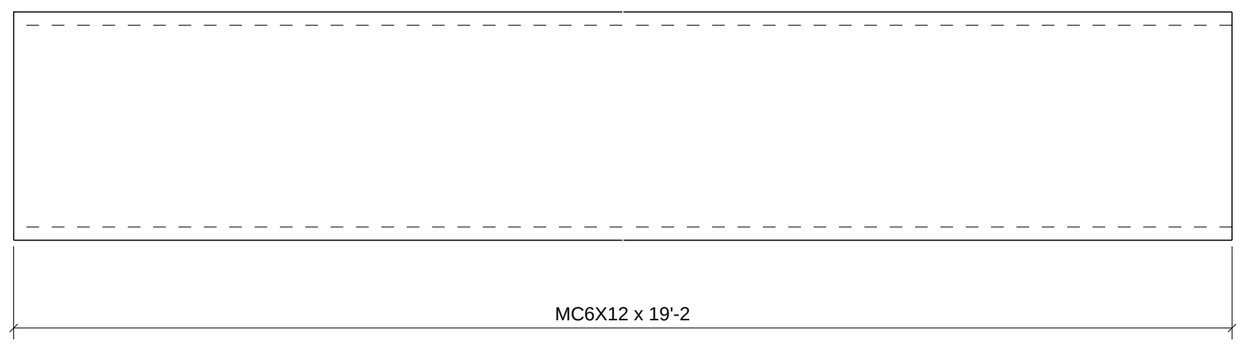

PROCESS CONTROL
PROCESS BY
FAB: _____
FIT AND WELD: _____
INSPECTION: _____
OTHER (IF NEEDED) _____
_____ : _____
_____ : _____
_____ : _____
_____ : _____
REFERENCE LATEST ERECTION DRAWINGS FOR MATERIAL & FABRICATION INFORMATION

12 - CHANNELS - M46

DATE	NO.	DESCRIPTION	BY
5/28/11	B	For Checking	TMc
5/16/11	A	For Approval	TMc

BILL OF MATERIAL

Qty Ea.	Qty Tot	Piece Mark	Description	Length	Weight Total	Remarks	Adv Mill #	Steel Grade
	12	M46	CHANNELS					
	12		MC6X12	19'-2"	2763	SQ-2		A36

STEEL ASTM	A992	UNO
ELECTRODES	E70XX L.H.	UNO
WELDS	1/4" FILLET	UNO
OPEN HOLES	13/16" UNO	FINISH PER SPECS
BOLTS	3/4" A325N	UNO
PAINT	1 S/C STD PRIMER U.N.O.	UNO

PROJECT NAME
OLDE ORCHARD ELEMENTARY SCHOOL

LOCATION
800 McNAUGHTEN RD. COLUMBUS, OHIO 43213

CONTRACTOR
THOMAS AND MARKER CONSTRUCTION

ARCHITECT
BRAUN & STEIDL

North Central Fabrication, Ltd.
NORTH CENTRAL FABRICATION
Mansfield, OH 44906
419-529-2744 FAX 419-529-5387 http://www.northcentralfab
AISC CERTIFIED FABRICATOR

DESCRIPTION	DATE	DATE	JOB No.
CHANNEL	05/18/2011		70234
	DRAWN BY TMc	CHECKED BY TAN	DRG No. M46

PHASE				
1	2	3	4	5
4	0	0	0	0

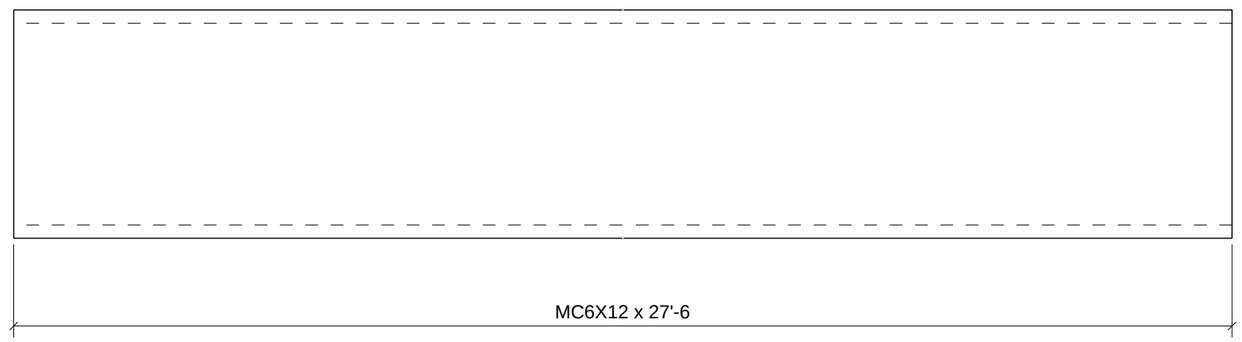

PROCESS CONTROL
PROCESS BY
FAB: _____
FIT AND WELD: _____
INSPECTION: _____
OTHER (IF NEEDED) _____
_____ : _____
_____ : _____
_____ : _____
_____ : _____
REFERENCE LATEST ERECTION DRAWINGS FOR MATERIAL & FABRICATION INFORMATION

4 - CHANNELS - M57

DATE	NO.	DESCRIPTION	BY
5/28/11	B	For Checking	TMc
5/16/11	A	For Approval	TMc

BILL OF MATERIAL

Qty Ea.	Qty Tot	Piece Mark	Description	Length	Weight Total	Remarks	Adv Mill #	Steel Grade
	4	M57	CHANNELS					
	4		MC6X12	27'-6"	1321	SQ-2		A36

STEEL ASTM	A992	UNO
ELECTRODES	E70XX L.H.	UNO
WELDS	1/4" FILLET	UNO
OPEN HOLES	13/16" UNO	FINISH PER SPECS
BOLTS	3/4" A325N	UNO
PAINT	1 S/C STD PRIMER U.N.O.	UNO

PROJECT NAME
OLDE ORCHARD ELEMENTARY SCHOOL

LOCATION
800 McNAUGHTEN RD. COLUMBUS, OHIO 43213

CONTRACTOR
THOMAS AND MARKER CONSTRUCTION

ARCHITECT
BRAUN & STEIDL

North Central Fabrication, Ltd.
NORTH CENTRAL FABRICATION
Mansfield, OH 44906
419-529-2744 FAX 419-529-5387 http://www.northcentralfab
AISC CERTIFIED FABRICATOR

DESCRIPTION	DATE	DATE	JOB No.
CHANNEL	05/19/2011		70234
	DRAWN BY TMc	CHECKED BY TAN	DRG No. M57

PHASE				
1	2	3	4	5
2	0	0	0	0

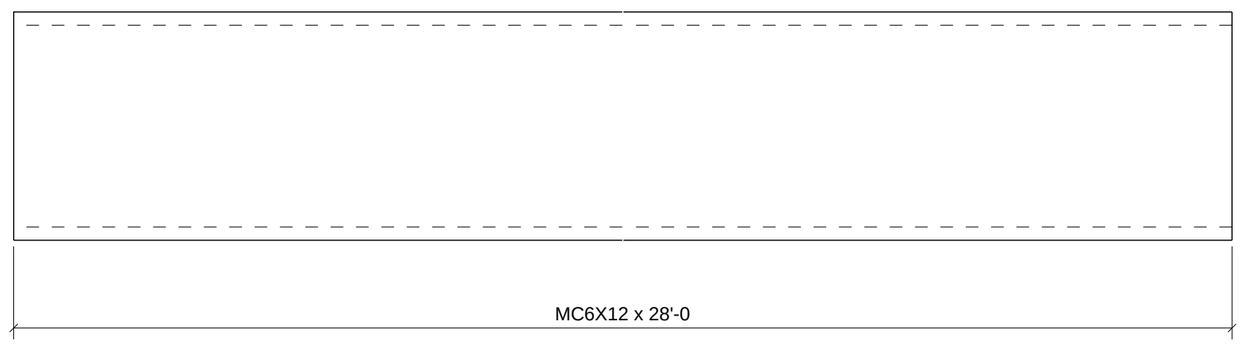

PROCESS CONTROL
PROCESS BY
FAB: _____
FIT AND WELD: _____
INSPECTION: _____
OTHER (IF NEEDED) _____
_____ : _____
_____ : _____
_____ : _____
_____ : _____
REFERENCE LATEST ERECTION DRAWINGS FOR MATERIAL & FABRICATION INFORMATION

2 - CHANNELS - M60

DATE	NO.	DESCRIPTION	BY
5/28/11	B	For Checking	TMc
5/16/11	A	For Approval	TMc

BILL OF MATERIAL

Qty Ea.	Qty Tot	Piece Mark	Description	Length	Weight Total	Remarks	Adv Mill #	Steel Grade
	2	M60	CHANNELS					
	2		MC6X12	28'-0"	673	SQ-2		A36

STEEL ASTM	A992	UNO
ELECTRODES	E70XX L.H.	UNO
WELDS	1/4" FILLET	UNO
OPEN HOLES	13/16" UNO	FINISH PER SPECS
BOLTS	3/4" A325N	UNO
PAINT	1 S/C STD PRIMER U.N.O.	UNO

PROJECT NAME
OLDE ORCHARD ELEMENTARY SCHOOL

LOCATION
800 McNAUGHTEN RD. COLUMBUS, OHIO 43213

CONTRACTOR
THOMAS AND MARKER CONSTRUCTION

ARCHITECT
BRAUN & STEIDL

North Central Fabrication, Ltd.
NORTH CENTRAL FABRICATION
Mansfield, OH 44906
419-529-2744 FAX 419-529-5387 http://www.northcentralfab
AISC CERTIFIED FABRICATOR

DESCRIPTION	DATE	DATE	JOB No.
CHANNEL	05/19/2011		70234
	DRAWN BY TMc	CHECKED BY TAN	DRG No. M60

PHASE				
1	2	3	4	5
2	0	0	0	0

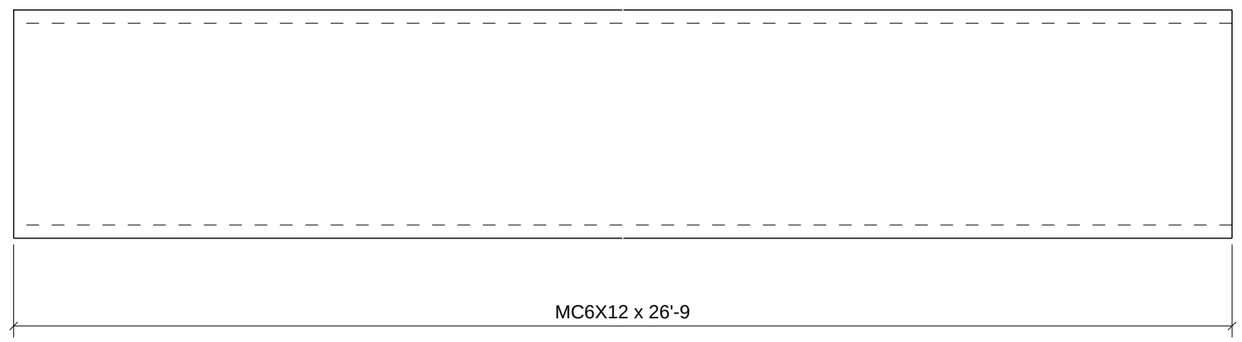

PROCESS CONTROL
PROCESS BY
FAB: _____
FIT AND WELD: _____
INSPECTION: _____
OTHER (IF NEEDED) _____
_____ : _____
_____ : _____
_____ : _____
_____ : _____
REFERENCE LATEST ERECTION DRAWINGS FOR MATERIAL & FABRICATION INFORMATION

2 - CHANNELS - M69

DATE	NO.	DESCRIPTION	BY
5/28/11	B	For Checking	TMc
5/16/11	A	For Approval	TMc

BILL OF MATERIAL

Qty Ea.	Qty Tot	Piece Mark	Description	Length	Weight Total	Remarks	Adv Mill #	Steel Grade
	2	M69	CHANNELS					
	2		MC6X12	26'-9"	643	SQ-2		A36

STEEL ASTM	A992	UNO
ELECTRODES	E70XX L.H.	UNO
WELDS	1/4" FILLET	UNO
OPEN HOLES	13/16" UNO	FINISH PER SPECS
BOLTS	3/4" A325N	UNO
PAINT	1 S/C STD PRIMER U.N.O.	UNO

PROJECT NAME
OLDE ORCHARD ELEMENTARY SCHOOL

LOCATION
800 McNAUGHTEN RD. COLUMBUS, OHIO 43213

CONTRACTOR
THOMAS AND MARKER CONSTRUCTION

ARCHITECT
BRAUN & STEIDL

North Central Fabrication, Ltd.
NORTH CENTRAL FABRICATION
Mansfield, OH 44906
419-529-2744 FAX 419-529-5387 http://www.northcentralfab
AISC CERTIFIED FABRICATOR

DESCRIPTION	DATE	DATE	JOB No.
CHANNEL	05/19/2011		70234
	DRAWN BY TMc	CHECKED BY TAN	DRG No. M69

PHASE				
1	2	3	4	5
2	0	0	0	0

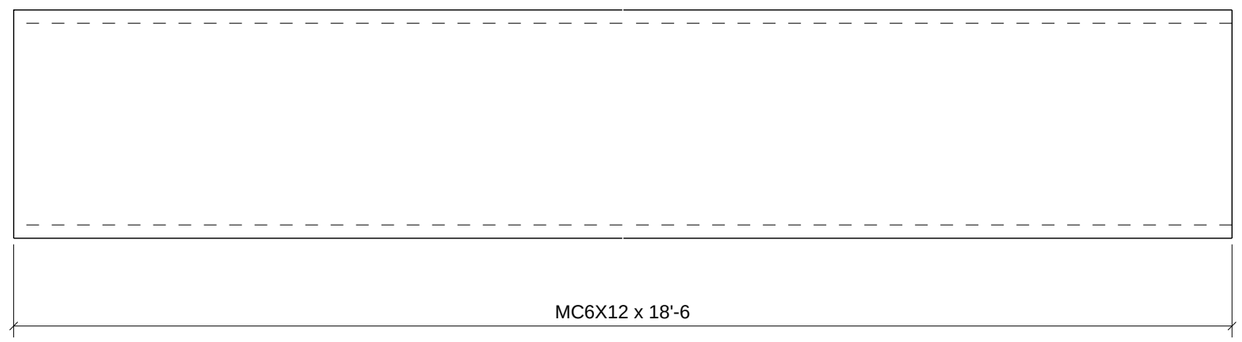

PROCESS CONTROL
PROCESS BY
FAB: _____
FIT AND WELD: _____
INSPECTION: _____
OTHER (IF NEEDED) _____
_____ : _____
_____ : _____
_____ : _____
_____ : _____
REFERENCE LATEST ERECTION DRAWINGS FOR MATERIAL & FABRICATION INFORMATION

2 - CHANNELS - M70

DATE	NO.	DESCRIPTION	BY
5/28/11	B	For Checking	TMc
5/16/11	A	For Approval	TMc

BILL OF MATERIAL

Qty Ea.	Qty Tot	Piece Mark	Description	Length	Weight Total	Remarks	Adv Mill #	Steel Grade
	2	M70	CHANNELS					
	2		MC6X12	18'-6"	444	SQ-2		A36

STEEL ASTM	A992	UNO
ELECTRODES	E70XX L.H.	UNO
WELDS	1/4" FILLET	UNO
OPEN HOLES	13/16" UNO	FINISH PER SPECS
BOLTS	3/4" A325N	UNO
PAINT	1 S/C STD PRIMER U.N.O.	UNO

PROJECT NAME
OLDE ORCHARD ELEMENTARY SCHOOL

LOCATION
800 McNAUGHTEN RD. COLUMBUS, OHIO 43213

CONTRACTOR
THOMAS AND MARKER CONSTRUCTION

ARCHITECT
BRAUN & STEIDL

North Central Fabrication, Ltd.
NORTH CENTRAL FABRICATION
Mansfield, OH 44906
419-529-2744 FAX 419-529-5387 http://www.northcentralfab
AISC CERTIFIED FABRICATOR

DESCRIPTION	DATE	DATE	JOB No.
CHANNEL	05/19/2011		70234
	DRAWN BY TMc	CHECKED BY TAN	DRG No. M70

GRID LOCATION	BOTTOM ELEVATION
B/4	99'-8"
A/4	99'-8"

PHASE				
1	2	3	4	5
2	0	0	0	0

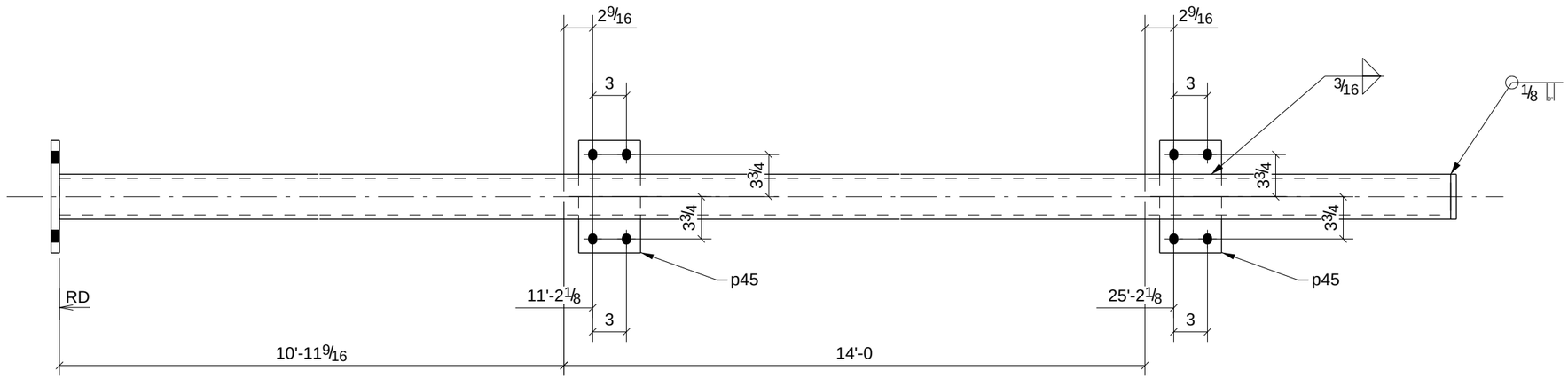

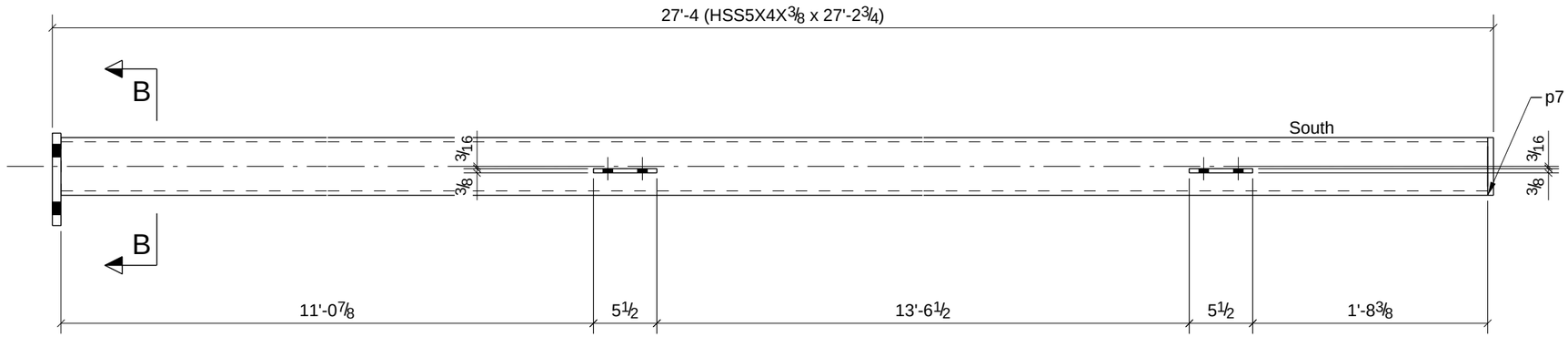

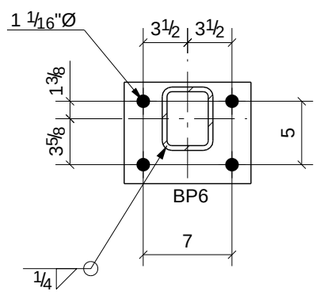

B - B

2 - COLUMNS - C1

PROCESS CONTROL
PROCESS BY
FAB: _____
FIT AND WELD: _____
INSPECTION: _____
OTHER (IF NEEDED) _____
_____ : _____
_____ : _____
_____ : _____
_____ : _____
REFERENCE LATEST ERECTION DRAWINGS FOR MATERIAL & FABRICATION INFORMATION

BILL OF MATERIAL

Qty Ea.	Qty Tot	Piece Mark	Description	Length	Weight Total	Remarks	Adv Mill #	Steel Grade
	2	C1	COLUMNS					
	2		HSS5X4X3/8	27'-2 3/4"	1016	SQ-2		A500-GR.B
	2	BP6	BAR3/4"X8"	0'-10"	34			A36
	2	p7	BAR1/2"X4"	0'-5"	6			A36
	4	p45	BAR3/8"X5 1/2"	0'-10"	23			A992

STEEL ASTM	A992		UNO
ELECTRODES	E70XX L.H.		UNO
WELDS	1/4" FILLET		UNO
OPEN HOLES	13/16" UNO	FINISH	PER SPECS
BOLTS	3/4" A325N		UNO
PAINT	1 S/C STD PRIMER U.N.O.		UNO

PROJECT NAME
OLDE ORCHARD ELEMENTARY SCHOOL
LOCATION
800 McNAUGHTEN RD. COLUMBUS, OHIO 43213
CONTRACTOR
THOMAS AND MARKER CONSTRUCTION
ARCHITECT
BRAUN & STEIDL

DATE	NO.	DESCRIPTION	BY
5/28/11	B	For Checking	TMc
5/16/11	A	For Approval	TMc

North Central Fabrication, Ltd.

NORTH CENTRAL FABRICATION
Mansfield, OH 44906
419-529-2744 FAX 419-529-5387 http://www.northcentralfab

AISC CERTIFIED FABRICATOR

DESCRIPTION	DATE	DATE	JOB No.
COLUMN	05/11/2011		70234
	DRAWN BY TMc	CHECKED BY TAN	DRG No. C1

GRID LOCATION	BOTTOM ELEVATION
A/1.2	99'-8"
B/1.2	99'-8"

PHASE				
1	2	3	4	5
2	0	0	0	0

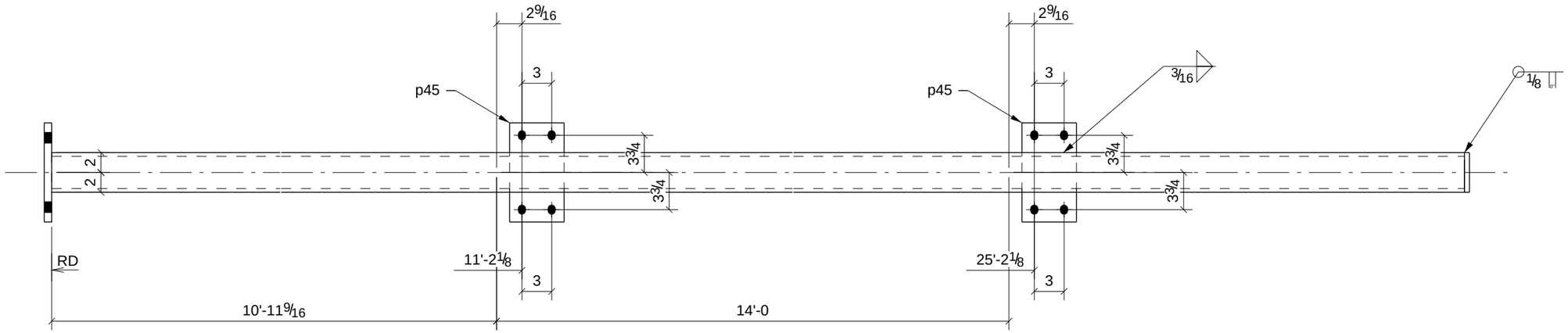

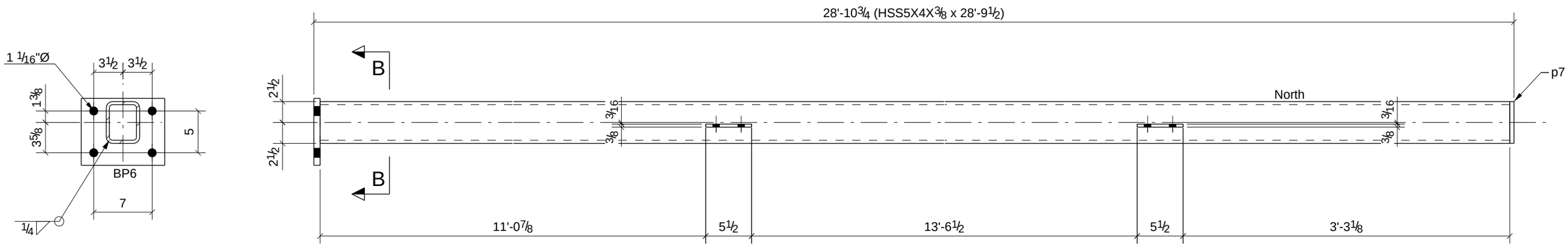

B - B

2 - COLUMNS - C2

PROCESS CONTROL
PROCESS BY
FAB: _____
FIT AND WELD: _____
INSPECTION: _____
OTHER (IF NEEDED) _____
_____ : _____
_____ : _____
_____ : _____
_____ : _____
_____ : _____
REFERENCE LATEST ERECTION DRAWINGS FOR MATERIAL & FABRICATION INFORMATION

BILL OF MATERIAL

Qty Ea.	Qty Tot	Piece Mark	Description	Length	Weight Total	Remarks	Adv Mill #	Steel Grade
	2	C2	COLUMNS					
	2		HSS5X4X3/8	28'-9 1/2"	1074	SQ-2		A500-GR.B
	2	BP6	BAR3/4"X8"	0'-10"	34			A36
	2	p7	BAR1/2"X4"	0'-5"	6			A36
	4	p45	BAR3/8"X5 1/2"	0'-10"	23			A992

STEEL ASTM	A992	UNO
ELECTRODES	E70XX L.H.	UNO
WELDS	1/4" FILLET	UNO
OPEN HOLES	13/16" UNO	FINISH PER SPECS
BOLTS	3/4" A325N	UNO
PAINT	1 S/C STD PRIMER U.N.O.	UNO

PROJECT NAME
OLDE ORCHARD ELEMENTARY SCHOOL
LOCATION
800 McNAUGHTEN RD. COLUMBUS, OHIO 43213
CONTRACTOR
THOMAS AND MARKER CONSTRUCTION
ARCHITECT
BRAUN & STEIDL

DATE	NO.	DESCRIPTION	BY
5/28/11	B	For Checking	TMc
5/16/11	A	For Approval	TMc

North Central Fabrication, Ltd.

NORTH CENTRAL FABRICATION
Mansfield, OH 44906
419-529-2744 FAX 419-529-5387 http://www.northcentralfab

AISC CERTIFIED FABRICATOR

DESCRIPTION	DATE	DATE	JOB No.
COLUMN	05/15/2011		70234
	DRAWN BY TMc	CHECKED BY TAN	DRG No. C2

GRID LOCATION	BOTTOM ELEVATION
C/5	113'-5"1/2

PHASE				
1	2	3	4	5
1	0	0	0	0

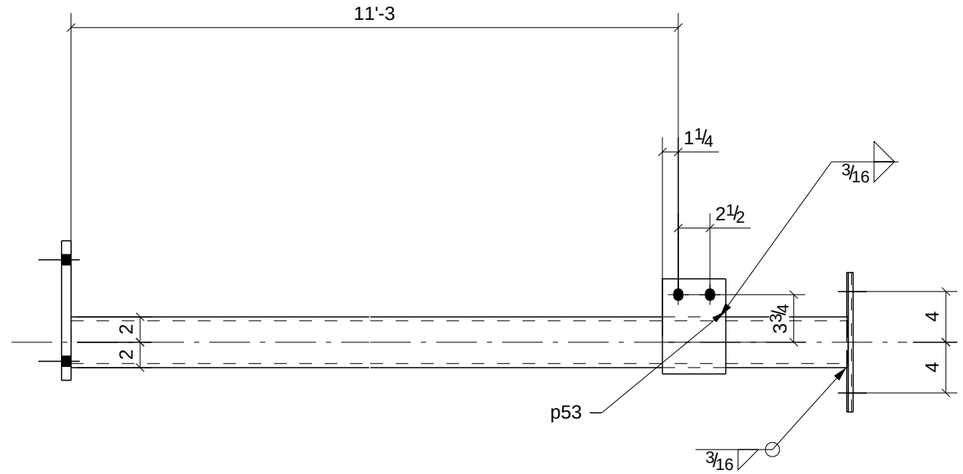

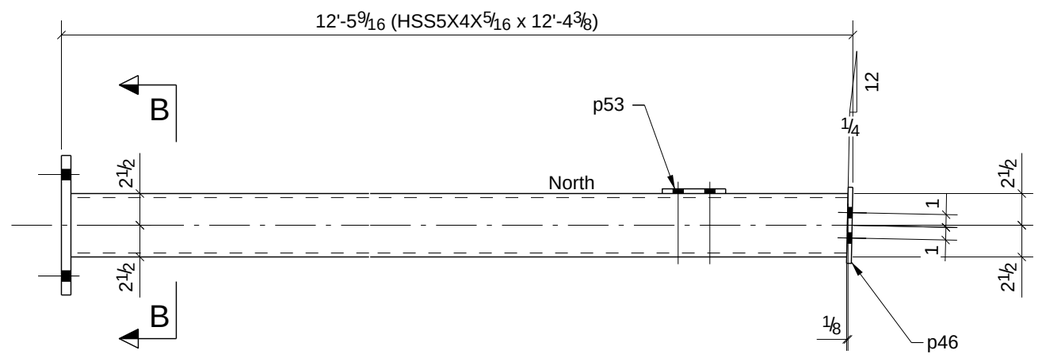

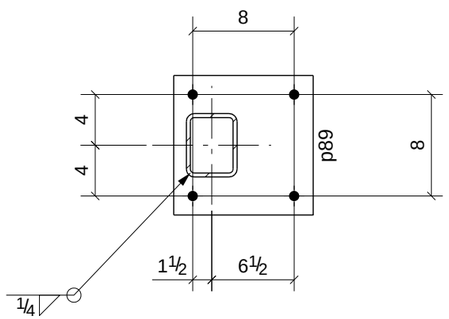

B - B

PROCESS CONTROL
PROCESS BY
FAB: _____
FIT AND WELD: _____
INSPECTION: _____
OTHER (IF NEEDED)
_____ : _____
_____ : _____
_____ : _____
_____ : _____
_____ : _____
REFERENCE LATEST ERECTION DRAWINGS FOR MATERIAL & FABRICATION INFORMATION

ONE - COLUMN - C3

BILL OF MATERIAL

Qty Ea.	Qty Tot	Piece Mark	Description	Length	Weight Total	Remarks	Adv Mill #	Steel Grade
	1	C3	COLUMN					
	1		HSS5X4X5/16	12'-4 3/8"	197	SQ-1/BEV-1		A500-GR.B
	1	p46	BAR3/8"X6"	0'-11"	7			A992
	1	p53	BAR3/8"X5"	0'-7 1/2"	4			A992
	1	p89	BAR3/4"X11"	0'-11"	26			A36

STEEL ASTM	A992	UNO
ELECTRODES	E70XX L.H.	UNO
WELDS	1/4" FILLET	UNO
OPEN HOLES	13/16" UNO	FINISH PER SPECS
BOLTS	3/4" A325N	UNO
PAINT	1 S/C STD PRIMER U.N.O.	UNO

PROJECT NAME
OLDE ORCHARD ELEMENTARY SCHOOL
LOCATION
800 McNAUGHTEN RD. COLUMBUS, OHIO 43213
CONTRACTOR
THOMAS AND MARKER CONSTRUCTION
ARCHITECT
BRAUN & STEIDL

DATE	NO.	DESCRIPTION	BY
5/28/11	B	For Checking	TMc
5/16/11	A	For Approval	TMc

North Central Fabrication, Ltd.

NORTH CENTRAL FABRICATION
Mansfield, OH 44906
419-529-2744 FAX 419-529-5387 http://www.northcentralfab

AISC CERTIFIED FABRICATOR

DESCRIPTION	DATE	DATE	JOB No.
COLUMN	05/15/2011		70234
	DRAWN BY TMc	CHECKED BY TAN	DRG No. C3

GRID LOCATION	BOTTOM ELEVATION
D.2/6	97'-5"
E.2/6	97'-5"
F.2/6	97'-5"
G.2/6	97'-5"
C.2/6	97'-5"

PHASE				
1	2	3	4	5
5	0	0	0	0

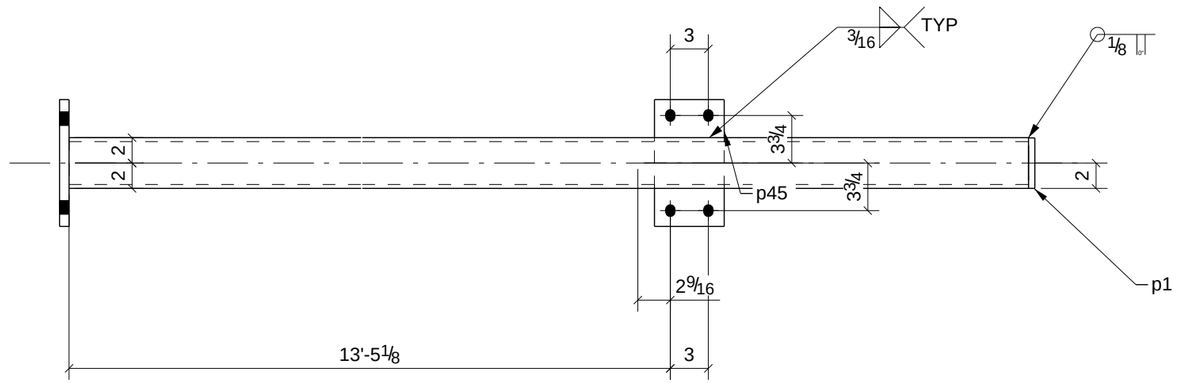

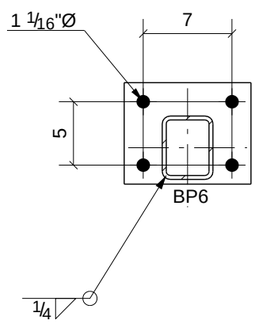

B - B

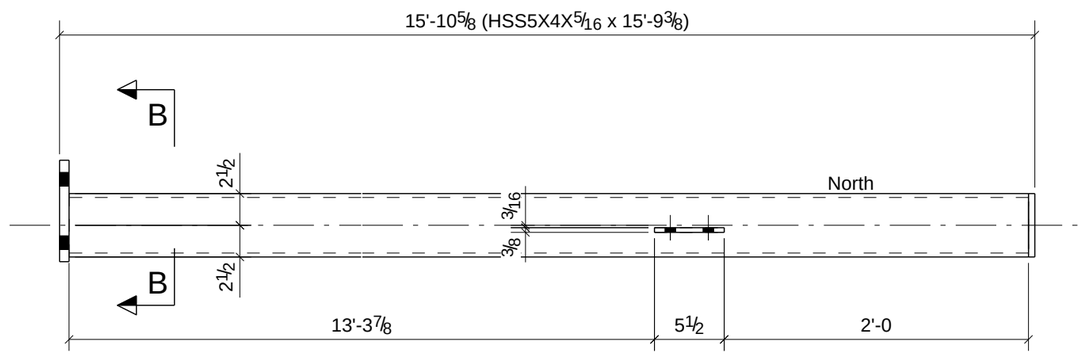

5 - COLUMNS - C4

PROCESS CONTROL
PROCESS BY
FAB: _____
FIT AND WELD: _____
INSPECTION: _____
OTHER (IF NEEDED) _____
_____ : _____
_____ : _____
_____ : _____
_____ : _____
REFERENCE LATEST ERECTION DRAWINGS FOR MATERIAL & FABRICATION INFORMATION

BILL OF MATERIAL

Qty Ea.	Qty Tot	Piece Mark	Description	Length	Weight Total	Remarks	Adv Mill #	Steel Grade
	5	C4	COLUMNS					
	5		HSS5X4X5/16	15'-9 3/8"	1257	SQ-2		A500-GR.B
	5	BP6	BAR3/4"X8"	0'-10"	85			A36
	5	p1	PL1/2"X4"	0'-5"	14			A36
	5	p45	BAR3/8"X5 1/2"	0'-10"	29			A992

STEEL ASTM	A992	UNO
ELECTRODES	E70XX L.H.	UNO
WELDS	1/4" FILLET	UNO
OPEN HOLES	13/16" UNO	FINISH PER SPECS
BOLTS	3/4" A325N	UNO
PAINT	1 S/C STD PRIMER U.N.O.	UNO

PROJECT NAME
OLDE ORCHARD ELEMENTARY SCHOOL
LOCATION
800 McNAUGHTEN RD. COLUMBUS, OHIO 43213
CONTRACTOR
THOMAS AND MARKER CONSTRUCTION
ARCHITECT
BRAUN & STEIDL

DATE	NO.	DESCRIPTION	BY
5/28/11	B	For Checking	TMc
5/16/11	A	For Approval	TMc

North Central Fabrication, Ltd.

NORTH CENTRAL FABRICATION
Mansfield, OH 44906
419-529-2744 FAX 419-529-5387 http://www.northcentralfab

AISC CERTIFIED FABRICATOR

DESCRIPTION	DATE	DATE	JOB No.
COLUMN	05/15/2011		70234
	DRAWN BY TMc	CHECKED BY TAN	DRG No. C4

GRID LOCATION	BOTTOM ELEVATION
C.2/5	113'-5"1/2

PHASE				
1	2	3	4	5
1	0	0	0	0

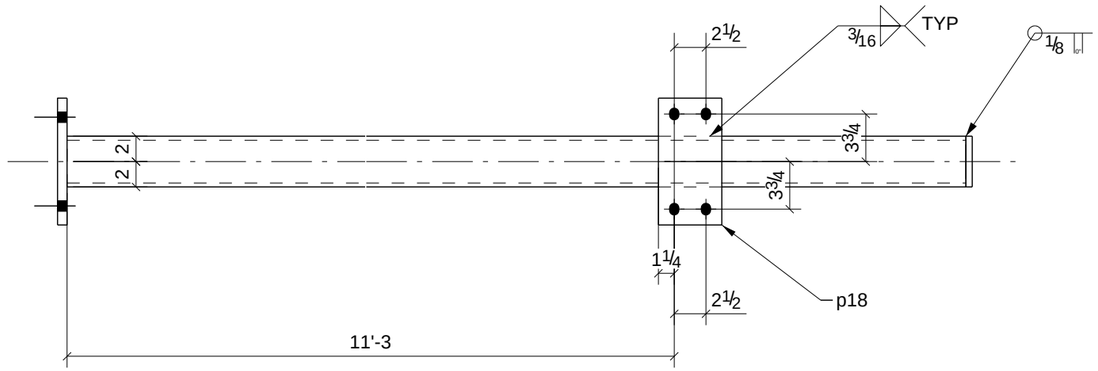

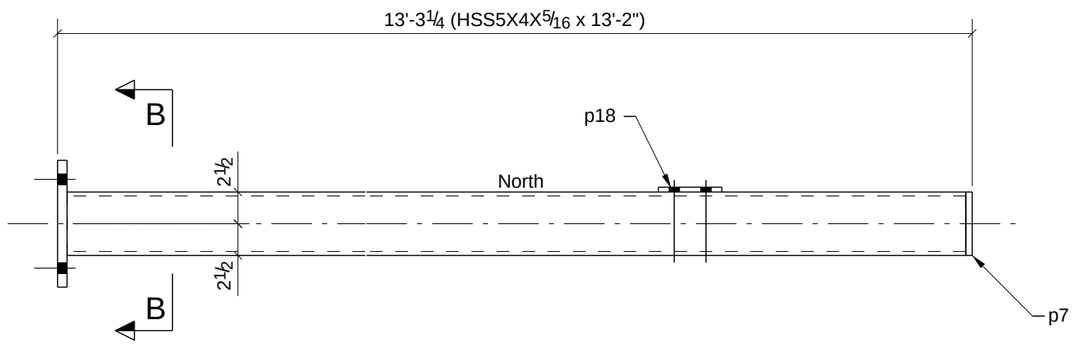

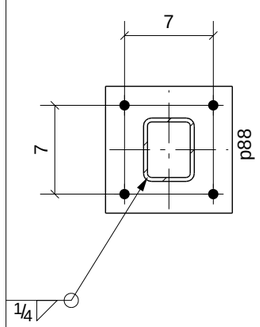

B - B

ONE - COLUMN - C5

PROCESS CONTROL
PROCESS BY
FAB: _____
FIT AND WELD: _____
INSPECTION: _____
OTHER (IF NEEDED) _____
_____ : _____
_____ : _____
_____ : _____
_____ : _____
REFERENCE LATEST ERECTION DRAWINGS FOR MATERIAL & FABRICATION INFORMATION

BILL OF MATERIAL

Qty Ea.	Qty Tot	Piece Mark	Description	Length	Weight Total	Remarks	Adv Mill #	Steel Grade
	1	C5	COLUMN					
	1		HSS5X4X5/16	13'-2"	210	SQ-2		A500-GR.B
	1	p7	BAR1/2"X4"	0'-5"	3			A36
	1	p18	BAR3/8"X5"	0'-10"	5			A992
	1	p88	BAR3/4"X10"	0'-10"	21			A36

STEEL ASTM	A992	UNO
ELECTRODES	E70XX L.H.	UNO
WELDS	1/4" FILLET	UNO
OPEN HOLES	13/16" UNO	FINISH PER SPECS
BOLTS	3/4" A325N	UNO
PAINT	1 S/C STD PRIMER U.N.O.	UNO

PROJECT NAME
OLDE ORCHARD ELEMENTARY SCHOOL
LOCATION
800 McNAUGHTEN RD. COLUMBUS, OHIO 43213
CONTRACTOR
THOMAS AND MARKER CONSTRUCTION
ARCHITECT
BRAUN & STEIDL

DATE	NO.	DESCRIPTION	BY
5/28/11	B	For Checking	TMc
5/16/11	A	For Approval	TMc

North Central Fabrication, Ltd.

NORTH CENTRAL FABRICATION
Mansfield, OH 44906
419-529-2744 FAX 419-529-5387 http://www.northcentralfab

AISC CERTIFIED FABRICATOR

DESCRIPTION	DATE	DATE	JOB No.
COLUMN	05/15/2011		70234
	DRAWN BY TMc	CHECKED BY TAN	DRG No. C5

GRID LOCATION	BOTTOM ELEVATION
C.2-C.7/	99'-8"
D.2-D.7/	99'-8"

PHASE				
1	2	3	4	5
2	0	0	0	0

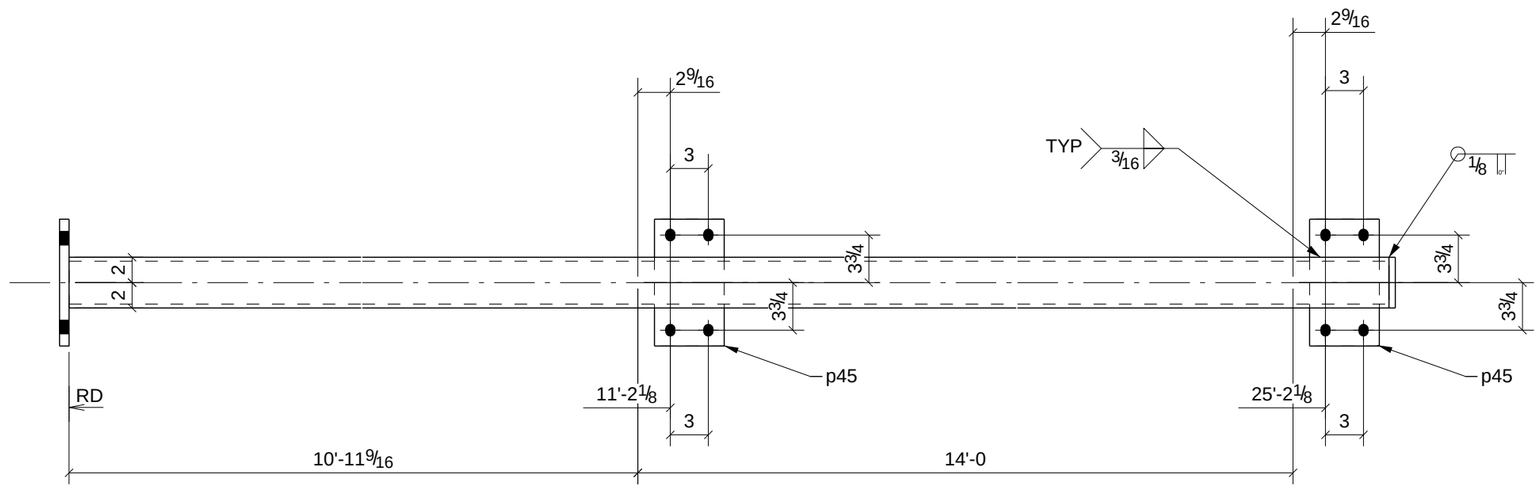

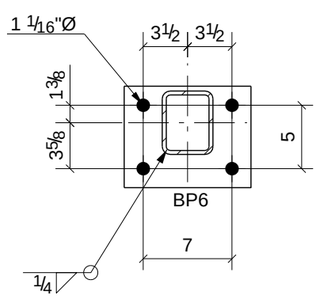

B - B

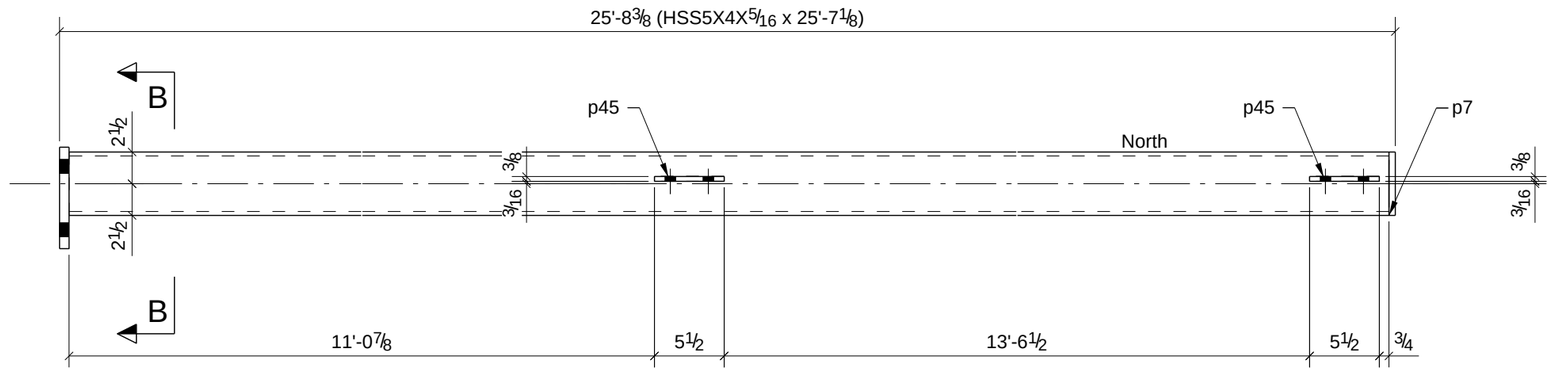

2 - COLUMNS - C6

PROCESS CONTROL
PROCESS BY
FAB: _____
FIT AND WELD: _____
INSPECTION: _____
OTHER (IF NEEDED) _____
_____ : _____
_____ : _____
_____ : _____
_____ : _____
REFERENCE LATEST ERECTION DRAWINGS FOR MATERIAL & FABRICATION INFORMATION

BILL OF MATERIAL

Qty Ea.	Qty Tot	Piece Mark	Description	Length	Weight Total	Remarks	Adv Mill #	Steel Grade
	2	C6	COLUMNS					
	2		HSS5X4X5/16	25'-7 1/8"	815	SQ-2		A500-GR.B
	2	BP6	BAR3/4"X8"	0'-10"	34			A36
	2	p7	BAR1/2"X4"	0'-5"	6			A36
	4	p45	BAR3/8"X5 1/2"	0'-10"	23			A992

STEEL ASTM	A992	UNO
ELECTRODES	E70XX L.H.	UNO
WELDS	1/4" FILLET	UNO
OPEN HOLES	13/16" UNO	FINISH PER SPECS
BOLTS	3/4" A325N	UNO
PAINT	1 S/C STD PRIMER U.N.O.	UNO

PROJECT NAME
OLDE ORCHARD ELEMENTARY SCHOOL
LOCATION
800 McNAUGHTEN RD. COLUMBUS, OHIO 43213
CONTRACTOR
THOMAS AND MARKER CONSTRUCTION
ARCHITECT
BRAUN & STEIDL

DATE	NO.	DESCRIPTION	BY
5/28/11	B	For Checking	TMc
5/16/11	A	For Approval	TMc

North Central Fabrication, Ltd.

NORTH CENTRAL FABRICATION
Mansfield, OH 44906
419-529-2744 FAX 419-529-5387 http://www.northcentralfab

AISC CERTIFIED FABRICATOR

DESCRIPTION	DATE	DATE	JOB No.
COLUMN	05/15/2011		70234
	DRAWN BY TMc	CHECKED BY TAN	DRG No. C6

GRID LOCATION	BOTTOM ELEVATION
F.7/5	113'-5"1/2
E.7/5	113'-5"1/2
D.7/5	113'-5"1/2
C.7/5	113'-5"1/2
G.7/5	113'-5"1/2

PHASE				
1	2	3	4	5
5	0	0	0	0

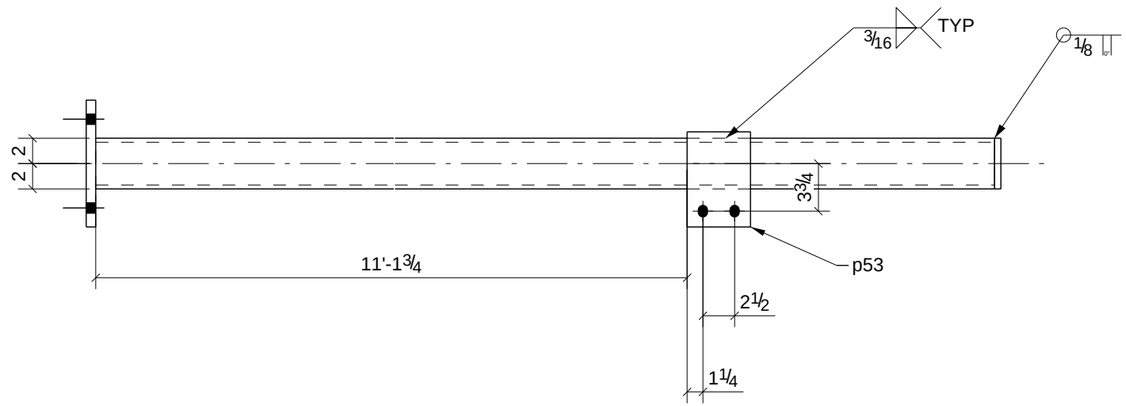

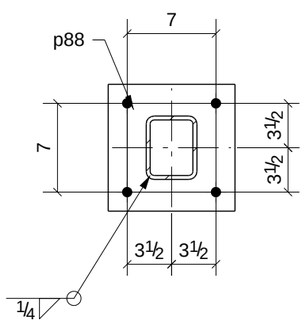

B - B

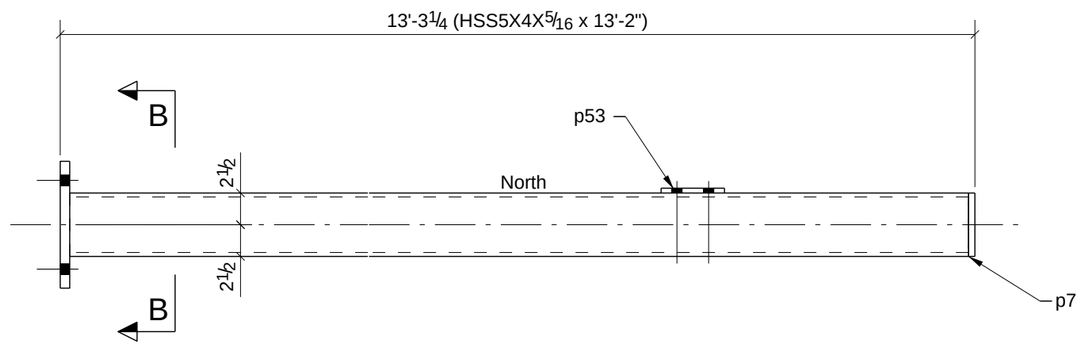

5 - COLUMNS - C7

PROCESS CONTROL
PROCESS BY
FAB: _____
FIT AND WELD: _____
INSPECTION: _____
OTHER (IF NEEDED) _____
_____ : _____
_____ : _____
_____ : _____
_____ : _____
REFERENCE LATEST ERECTION DRAWINGS FOR MATERIAL & FABRICATION INFORMATION

BILL OF MATERIAL

Qty Ea.	Qty Tot	Piece Mark	Description	Length	Weight Total	Remarks	Adv Mill #	Steel Grade
	5	C7	COLUMNS					
	5		HSS5X4X5/16	13'-2"	1049	SQ-2		A500-GR.B
	5	p7	BAR1/2"X4"	0'-5"	14			A36
	5	p53	BAR3/8"X5"	0'-7 1/2"	20			A992
	5	p88	BAR3/4"X10"	0'-10"	106			A36

STEEL ASTM	A992			UNO
ELECTRODES	E70XX L.H.			UNO
WELDS	1/4" FILLET			UNO
OPEN HOLES	13/16"	UNO	FINISH	PER SPECS
BOLTS	3/4" A325N			UNO
PAINT	1 S/C STD PRIMER U.N.O.			UNO

PROJECT NAME
OLDE ORCHARD ELEMENTARY SCHOOL

LOCATION
800 McNAUGHTEN RD. COLUMBUS, OHIO 43213

CONTRACTOR
THOMAS AND MARKER CONSTRUCTION

ARCHITECT
BRAUN & STEIDL

DATE	NO.	DESCRIPTION	BY
5/28/11	B	For Checking	TMc
5/16/11	A	For Approval	TMc

North Central Fabrication, Ltd.
NORTH CENTRAL FABRICATION
Mansfield, OH 44906
419-529-2744 FAX 419-529-5387 http://www.northcentralfab
AISC CERTIFIED FABRICATOR

DESCRIPTION: COLUMN	DATE: 05/15/2011	DATE:	JOB No. 70234
	DRAWN BY: TMc	CHECKED BY: TAN	DRG No. C7

GRID LOCATION	BOTTOM ELEVATION
D/5	99'-5"

PHASE				
1	2	3	4	5
1	0	0	0	0

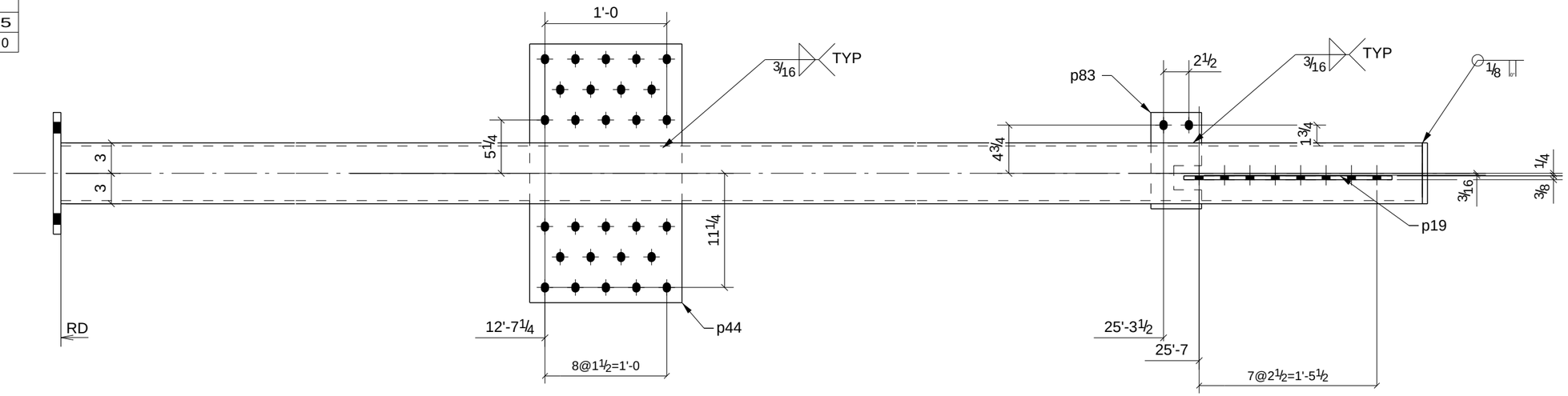

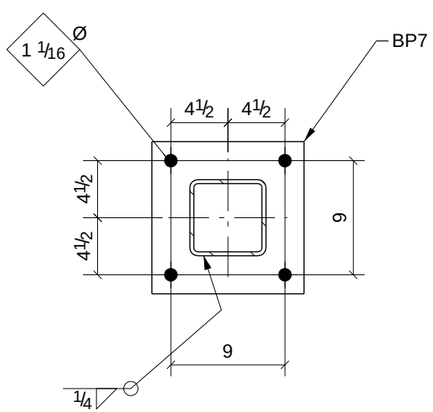

A - A

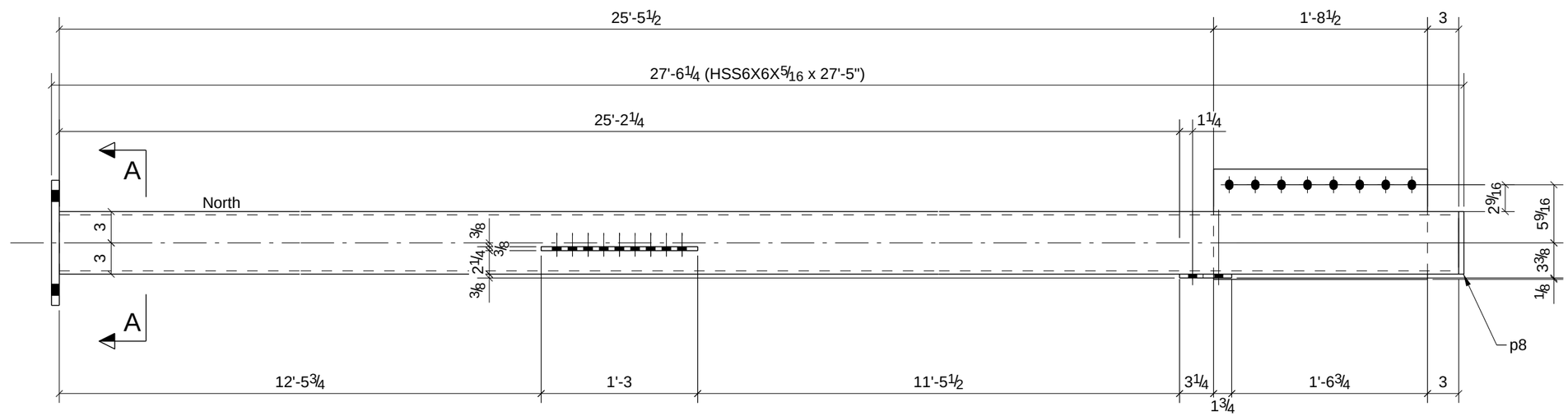

PROCESS CONTROL
PROCESS BY
FAB: _____
FIT AND WELD: _____
INSPECTION: _____
OTHER (IF NEEDED)
_____ : _____
_____ : _____
_____ : _____
_____ : _____
_____ : _____
REFERENCE LATEST ERECTION DRAWINGS FOR MATERIAL & FABRICATION INFORMATION

ONE - COLUMN - C8

BILL OF MATERIAL

Qty Ea.	Qty Tot	Piece Mark	Description	Length	Weight Total	Remarks	Adv Mill #	Steel Grade
	1	C8	COLUMN					
	1		HSS6X6X5/16	27'-5"	600	SQ-2		A500-GR.B
	1	BP7	BAR3/4"X12"	1'-0"	31			A36
	1	p8	BAR1/2"X6"	0'-6"	5			A36
	1	p19	PL3/8"X10 9/16"	1'-8 1/2"	23			A36
	1	p44	PL3/8"X15"	2'-1 1/2"	41			A36
	1	p83	BAR3/8"X5"	0'-9 1/2"	4			A992

STEEL ASTM	A992	UNO
ELECTRODES	E70XX L.H.	UNO
WELDS	1/4" FILLET	UNO
OPEN HOLES	13/16" UNO	FINISH PER SPECS
BOLTS	3/4" A325N	UNO
PAINT	1 S/C STD PRIMER U.N.O.	UNO

PROJECT NAME
OLDE ORCHARD ELEMENTARY SCHOOL
LOCATION
800 McNAUGHTEN RD. COLUMBUS, OHIO 43213
CONTRACTOR
THOMAS AND MARKER CONSTRUCTION
ARCHITECT
BRAUN & STEIDL

DATE	NO.	DESCRIPTION	BY
5/28/11	B	For Checking	TMc
5/16/11	A	For Approval	TMc

North Central Fabrication, Ltd.

NORTH CENTRAL FABRICATION
Mansfield, OH 44906
419-529-2744 FAX 419-529-5387 http://www.northcentralfab

AISC CERTIFIED FABRICATOR

DESCRIPTION	DATE	DATE	JOB No.
COLUMN	05/15/2011		70234
	DRAWN BY TMc	CHECKED BY TAN	DRG No. C8

GRID LOCATION	BOTTOM ELEVATION
E/5	99'-5"
F/5	99'-5"

PHASE				
1	2	3	4	5
2	0	0	0	0

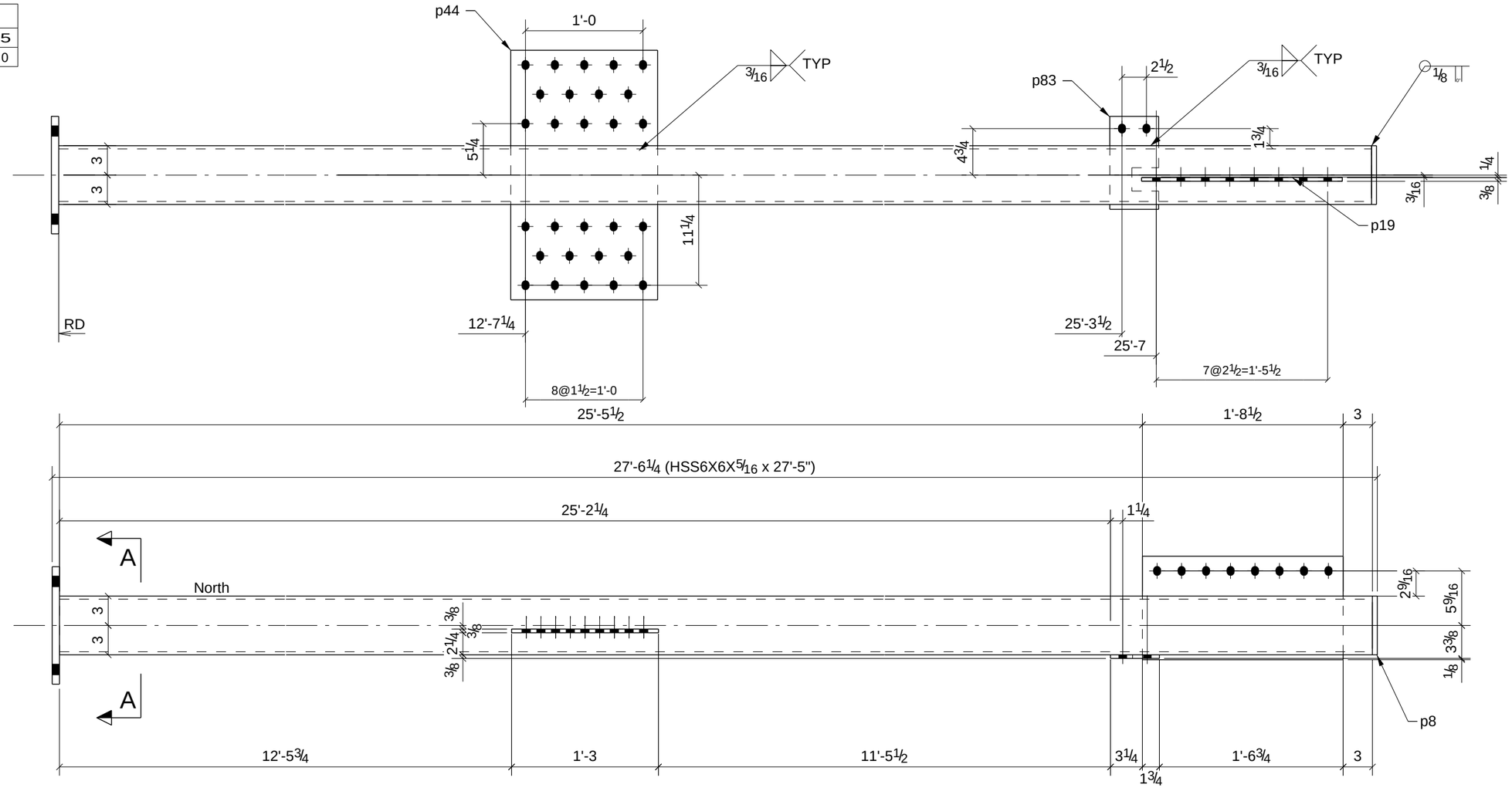

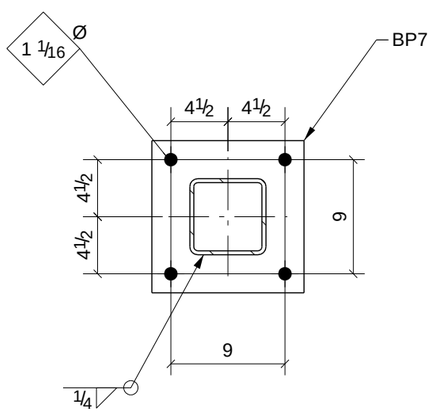

A - A

PROCESS CONTROL
PROCESS BY
FAB: _____
FIT AND WELD: _____
INSPECTION: _____
OTHER (IF NEEDED)
_____ : _____
_____ : _____
_____ : _____
_____ : _____
_____ : _____
REFERENCE LATEST ERECTION DRAWINGS FOR MATERIAL & FABRICATION INFORMATION

2 - COLUMNS - C9

BILL OF MATERIAL

Qty Ea.	Qty Tot	Piece Mark	Description	Length	Weight Total	Remarks	Adv Mill #	Steel Grade
	2	C9	COLUMNS					
	2		HSS6X6X5/16	27'-5"	1200	SQ-2		A500-GR.B
	2	BP7	BAR3/4"X12"	1'-0"	61			A36
	2	p8	BAR1/2"X6"	0'-6"	10			A36
	2	p19	PL3/8"X10 9/16"	1'-8 1/2"	46			A36
	2	p44	PL3/8"X15"	2'-1 1/2"	81			A36
	2	p83	BAR3/8"X5"	0'-9 1/2"	9			A992

STEEL ASTM	A992	UNO
ELECTRODES	E70XX L.H.	UNO
WELDS	1/4" FILLET	UNO
OPEN HOLES	13/16" UNO	FINISH PER SPECS
BOLTS	3/4" A325N	UNO
PAINT	1 S/C STD PRIMER U.N.O.	UNO

PROJECT NAME
OLDE ORCHARD ELEMENTARY SCHOOL
LOCATION
800 McNAUGHTEN RD. COLUMBUS, OHIO 43213
CONTRACTOR
THOMAS AND MARKER CONSTRUCTION
ARCHITECT
BRAUN & STEIDL

DATE	NO.	DESCRIPTION	BY
5/28/11	B	For Checking	TMc

North Central Fabrication, Ltd.

NORTH CENTRAL FABRICATION
Mansfield, OH 44906
419-529-2744 FAX 419-529-5387 http://www.northcentralfab

AISC CERTIFIED FABRICATOR

DESCRIPTION	DATE	DATE	JOB No.
COLUMN	05/28/2011		70234
	DRAWN BY	CHECKED BY	DRG No. C9

GRID LOCATION	BOTTOM ELEVATION
E.2/5	113'-5"1/2
F.2/5	113'-5"1/2
G.2/5	113'-5"1/2
D.2/5	113'-5"1/2

PHASE				
1	2	3	4	5
4	0	0	0	0

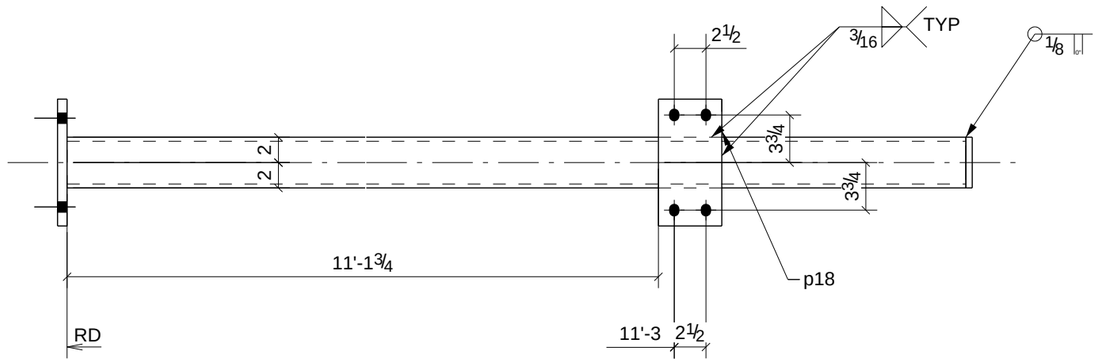

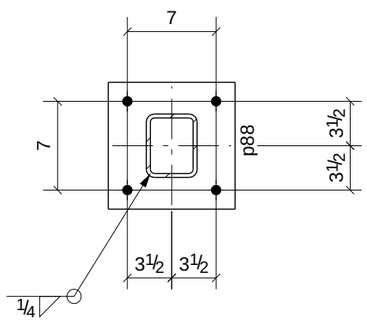

B - B

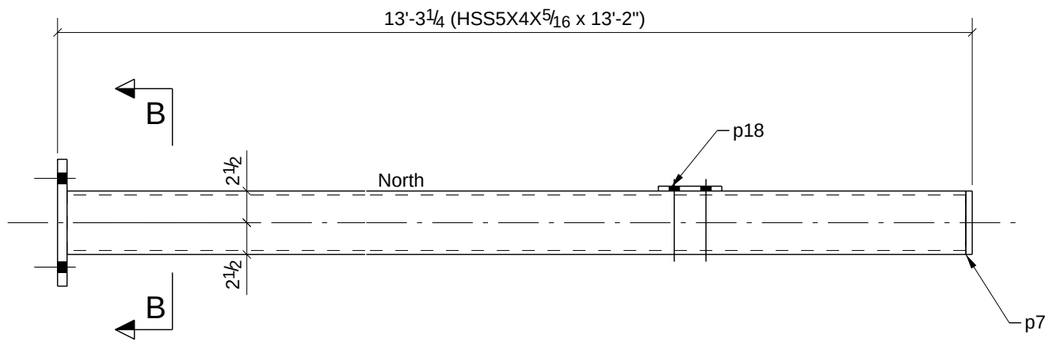

4 - COLUMNS - C10

PROCESS CONTROL
PROCESS BY
FAB: _____
FIT AND WELD: _____
INSPECTION: _____
OTHER (IF NEEDED) _____
_____ : _____
_____ : _____
_____ : _____
_____ : _____
_____ : _____
REFERENCE LATEST ERECTION DRAWINGS FOR MATERIAL & FABRICATION INFORMATION

BILL OF MATERIAL

Qty Ea.	Qty Tot	Piece Mark	Description	Length	Weight Total	Remarks	Adv Mill #	Steel Grade
	4	C10	COLUMNS					
	4		HSS5X4X5/16	13'-2"	839	SQ-2		A500-GR.B
	4	p7	BAR1/2"X4"	0'-5"	11			A36
	4	p18	BAR3/8"X5"	0'-10"	21			A992
	4	p88	BAR3/4"X10"	0'-10"	85			A36

STEEL ASTM	A992	UNO
ELECTRODES	E70XX L.H.	UNO
WELDS	1/4" FILLET	UNO
OPEN HOLES	13/16" UNO	FINISH PER SPECS
BOLTS	3/4" A325N	UNO
PAINT	1 S/C STD PRIMER U.N.O.	UNO

PROJECT NAME
OLDE ORCHARD ELEMENTARY SCHOOL
LOCATION
800 McNAUGHTEN RD. COLUMBUS, OHIO 43213
CONTRACTOR
THOMAS AND MARKER CONSTRUCTION
ARCHITECT
BRAUN & STEIDL

DATE	NO.	DESCRIPTION	BY
5/28/11	B	For Checking	TMc
5/16/11	A	For Approval	TMc

North Central Fabrication, Ltd.

NORTH CENTRAL FABRICATION
Mansfield, OH 44906
419-529-2744 FAX 419-529-5387 http://www.northcentralfab

AISC CERTIFIED FABRICATOR

DESCRIPTION	DATE	DATE	JOB No.
COLUMN	05/15/2011		70234
	DRAWN BY TMc	CHECKED BY TAN	DRG No. C10

GRID LOCATION	BOTTOM ELEVATION
G/5	99'-5"

PHASE				
1	2	3	4	5
1	0	0	0	0

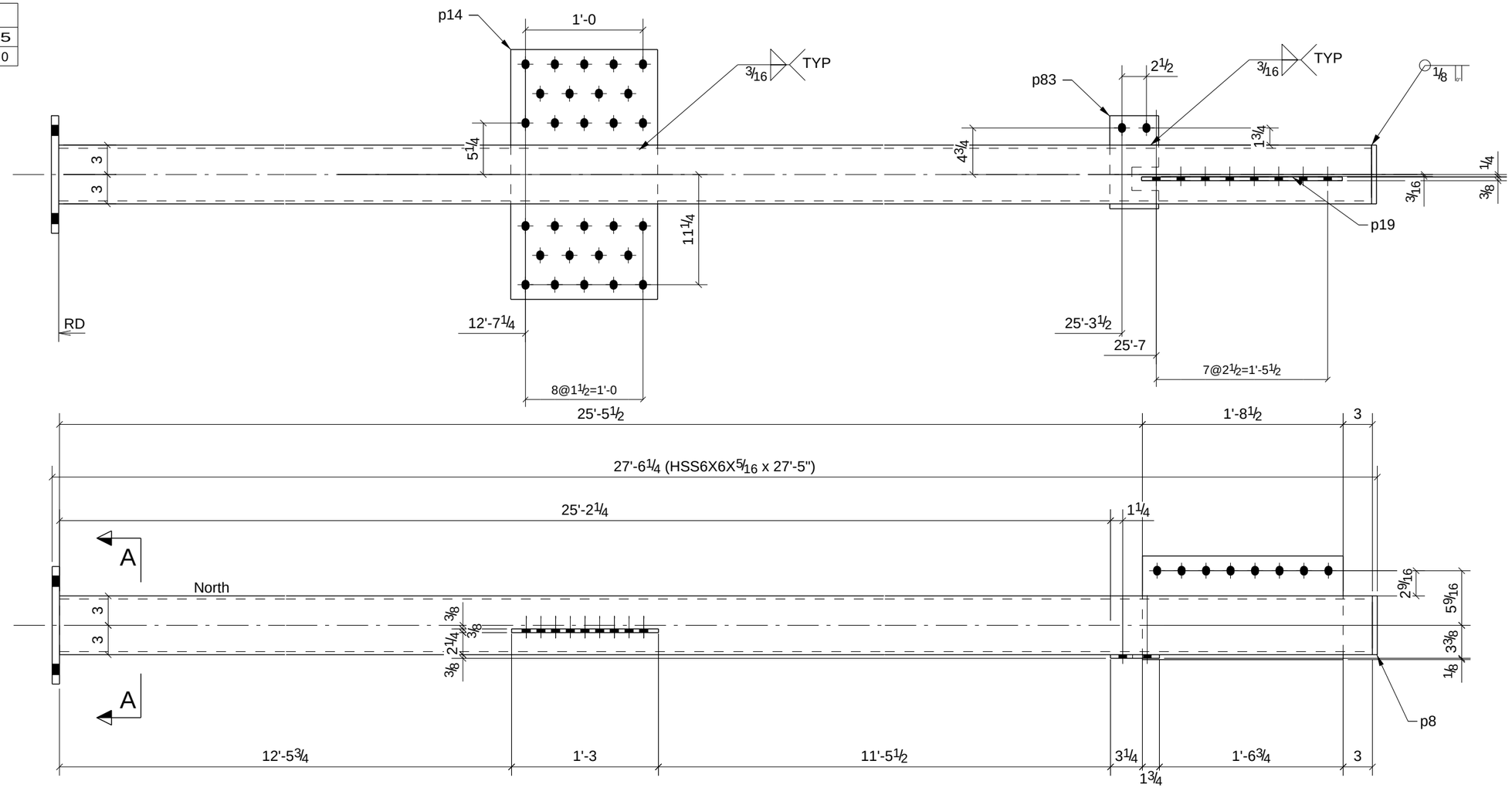

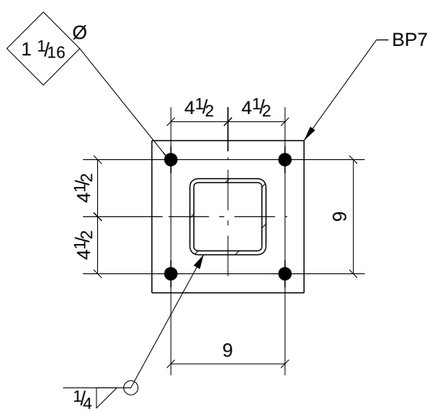

A - A

PROCESS CONTROL
PROCESS BY
FAB: _____
FIT AND WELD: _____
INSPECTION: _____
OTHER (IF NEEDED)
_____ : _____
_____ : _____
_____ : _____
_____ : _____
_____ : _____
REFERENCE LATEST ERECTION DRAWINGS FOR MATERIAL & FABRICATION INFORMATION

ONE - COLUMN - C11

BILL OF MATERIAL

Qty Ea.	Qty Tot	Piece Mark	Description	Length	Weight Total	Remarks	Adv Mill #	Steel Grade
	1	C11	COLUMN					
	1		HSS6X6X5/16	27'-5"	600	SQ-2		A500-GR.B
	1	BP7	BAR3/4"X12"	1'-0"	31			A36
	1	p8	BAR1/2"X6"	0'-6"	5			A36
	1	p14	PL3/8"X15"	2'-1 1/2"	41			A36
	1	p19	PL3/8"X10 9/16"	1'-8 1/2"	23			A36
	1	p83	BAR3/8"X5"	0'-9 1/2"	4			A992

STEEL ASTM	A992	UNO
ELECTRODES	E70XX L.H.	UNO
WELDS	1/4" FILLET	UNO
OPEN HOLES	13/16" UNO	FINISH PER SPECS
BOLTS	3/4" A325N	UNO
PAINT	1 S/C STD PRIMER U.N.O.	UNO

PROJECT NAME
OLDE ORCHARD ELEMENTARY SCHOOL
LOCATION
800 McNAUGHTEN RD. COLUMBUS, OHIO 43213
CONTRACTOR
THOMAS AND MARKER CONSTRUCTION
ARCHITECT
BRAUN & STEIDL

DATE	NO.	DESCRIPTION	BY
5/28/11	B	For Checking	TMc

North Central Fabrication, Ltd.

NORTH CENTRAL FABRICATION
Mansfield, OH 44906
419-529-2744 FAX 419-529-5387 http://www.northcentralfab

AISC CERTIFIED FABRICATOR

DESCRIPTION	DATE	DATE	JOB No.
COLUMN	05/28/2011		70234
	DRAWN BY	CHECKED BY	DRG No. C11

GRID LOCATION	BOTTOM ELEVATION
E-E.2/2-	128'-3"

PHASE				
1	2	3	4	5
1	0	0	0	0

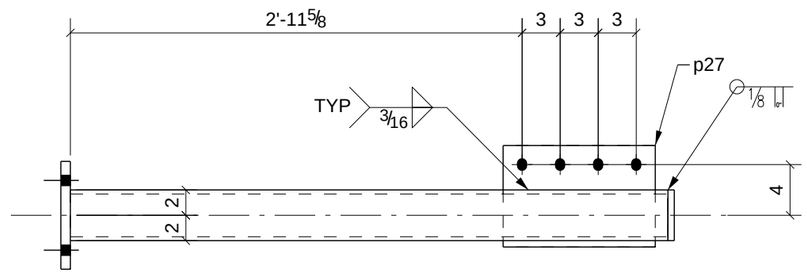

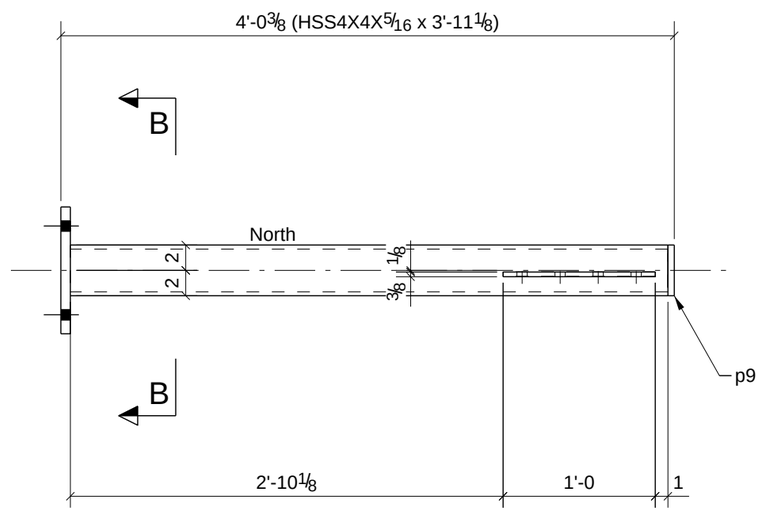

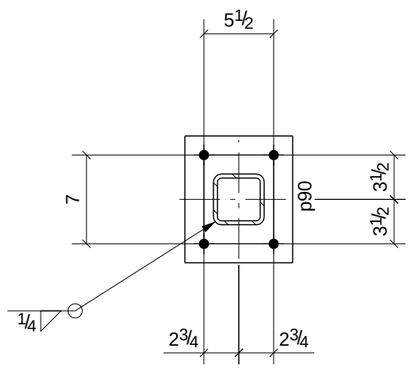

B - B

PROCESS CONTROL
PROCESS BY
FAB: _____
FIT AND WELD: _____
INSPECTION: _____
OTHER (IF NEEDED)
_____ : _____
_____ : _____
_____ : _____
_____ : _____
_____ : _____
REFERENCE LATEST ERECTION DRAWINGS FOR MATERIAL & FABRICATION INFORMATION

ONE - COLUMN - C12

BILL OF MATERIAL

Qty Ea.	Qty Tot	Piece Mark	Description	Length	Weight Total	Remarks	Adv Mill #	Steel Grade
	1	C12	COLUMN					
	1		HSS4X4X5/16	3'-11 1/8"	55	SQ-2		A500-GR.B
	1	p9	BAR1/2"X4"	0'-4"	2			A36
	1	p27	BAR3/8"X8"	1'-0"	10			A36
	1	p90	BAR3/4"X8 1/2"	0'-10"	18			A36

STEEL ASTM	A992	UNO
ELECTRODES	E70XX L.H.	UNO
WELDS	1/4" FILLET	UNO
OPEN HOLES	13/16" UNO	FINISH PER SPECS
BOLTS	3/4" A325N	UNO
PAINT	1 S/C STD PRIMER U.N.O.	UNO

PROJECT NAME
OLDE ORCHARD ELEMENTARY SCHOOL

LOCATION
800 McNAUGHTEN RD. COLUMBUS, OHIO 43213

CONTRACTOR
THOMAS AND MARKER CONSTRUCTION

ARCHITECT
BRAUN & STEIDL

DATE	NO.	DESCRIPTION	BY
5/28/11	B	For Checking	TMc
5/16/11	A	For Approval	TMc

North Central Fabrication, Ltd.

NORTH CENTRAL FABRICATION
Mansfield, OH 44906
419-529-2744 FAX 419-529-5387 http://www.northcentralfab

AISC CERTIFIED FABRICATOR

DESCRIPTION	DATE	DATE	JOB No.
COLUMN	05/15/2011		70234
	DRAWN BY TMc	CHECKED BY TAN	DRG No. C12

GRID LOCATION	BOTTOM ELEVATION
E.2/1>	114'-0"

PHASE				
1	2	3	4	5
1	0	0	0	0

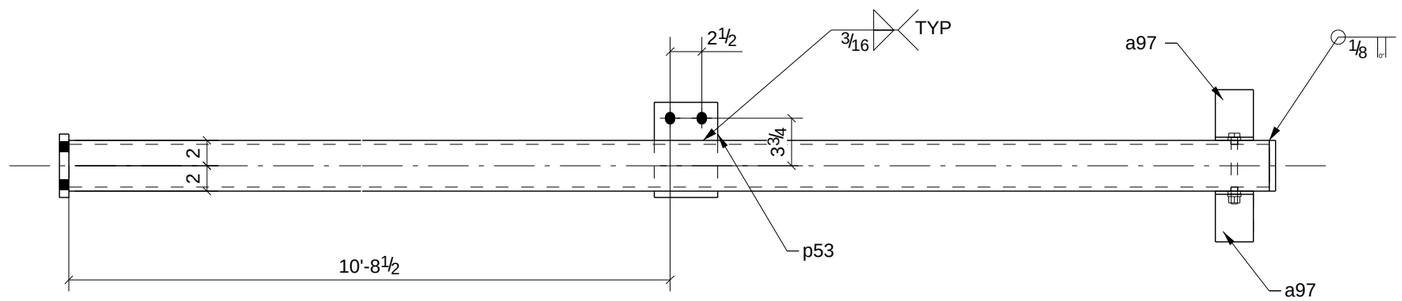

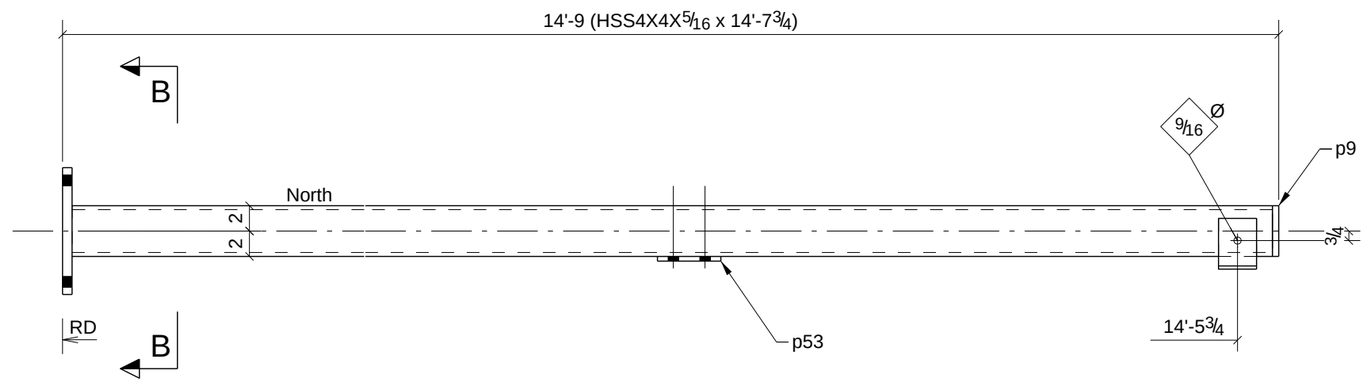

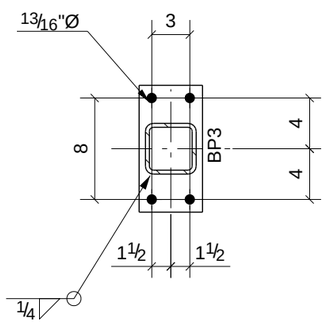

B - B

PROCESS CONTROL
PROCESS BY
FAB: _____
FIT AND WELD: _____
INSPECTION: _____
OTHER (IF NEEDED) _____
REFERENCE LATEST ERECTION DRAWINGS FOR MATERIAL & FABRICATION INFORMATION

ONE - COLUMN - C13

BILL OF MATERIAL

Qty Ea.	Qty Tot	Piece Mark	Description	Length	Weight Total	Remarks	Adv Mill #	Steel Grade
	1	C13	COLUMN					
	1		HSS4X4X5/16	14'-7 3/4"	204	SQ-2		A500-GR.B
	1	BP3	BAR3/4"X5"	0'-10"	11			A36
	2	a97	L4X4X1/4	0'-3"	3			A36
	1	p9	BAR1/2"X4"	0'-4"	2			A36
	1	p53	BAR3/8"X5"	0'-7 1/2"	4			A992
	1		1/2"Ø A325N BOLT	0'-5 1/4"	0			

STEEL ASTM	A992	UNO
ELECTRODES	E70XX L.H.	UNO
WELDS	1/4" FILLET	UNO
OPEN HOLES	13/16" UNO	FINISH PER SPECS
BOLTS	3/4" A325N	UNO
PAINT	1 S/C STD PRIMER U.N.O.	UNO

PROJECT NAME
OLDE ORCHARD ELEMENTARY SCHOOL

LOCATION
800 McNAUGHTEN RD. COLUMBUS, OHIO 43213

CONTRACTOR
THOMAS AND MARKER CONSTRUCTION

ARCHITECT
BRAUN & STEIDL

DATE	NO.	DESCRIPTION	BY
5/28/11	B	For Checking	TMc
5/16/11	A	For Approval	TMc

North Central Fabrication, Ltd.

NORTH CENTRAL FABRICATION
Mansfield, OH 44906
419-529-2744 FAX 419-529-5387 http://www.northcentralfab

AISC CERTIFIED FABRICATOR

DESCRIPTION	DATE	DATE	JOB No.
COLUMN	05/15/2011		70234
	DRAWN BY TMc	CHECKED BY TAN	DRG No. C13

GRID LOCATION	BOTTOM ELEVATION
E.2-E.7/	99'-8"

PHASE				
1	2	3	4	5
1	0	0	0	0

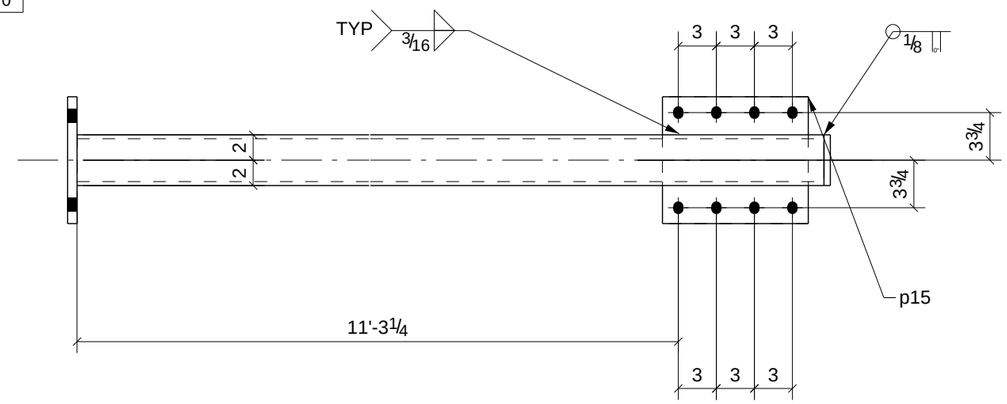

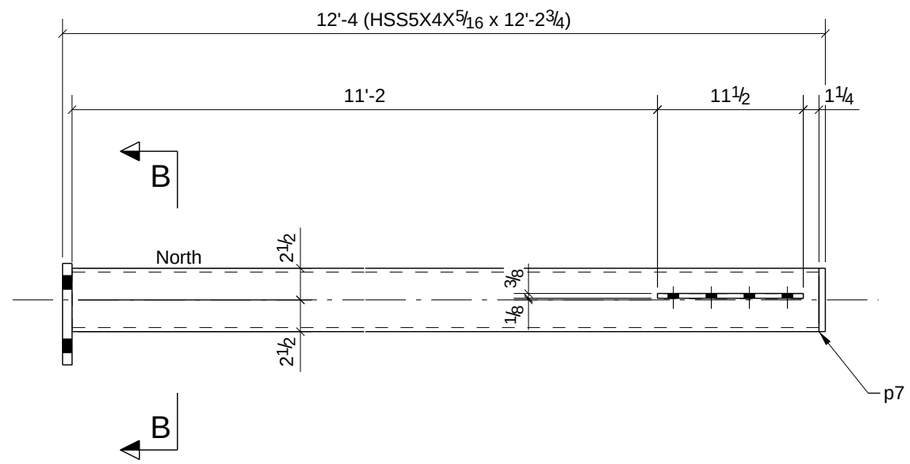

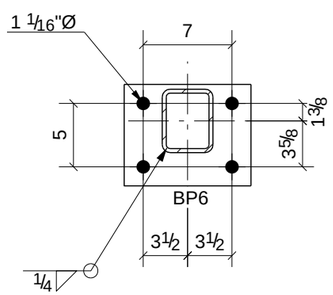

B - B

PROCESS CONTROL
PROCESS BY
FAB: _____
FIT AND WELD: _____
INSPECTION: _____
OTHER (IF NEEDED) _____
_____ : _____
_____ : _____
_____ : _____
_____ : _____
REFERENCE LATEST ERECTION DRAWINGS FOR MATERIAL & FABRICATION INFORMATION

ONE - COLUMN - C14

BILL OF MATERIAL

Qty Ea.	Qty Tot	Piece Mark	Description	Length	Weight Total	Remarks	Adv Mill #	Steel Grade
	1	C14	COLUMN					
	1		HSS5X4X5/16	12'-2 3/4"	195	SQ-2		A500-GR.B
	1	BP6	BAR3/4"X8"	0'-10"	17			A36
	1	p7	BAR1/2"X4"	0'-5"	3			A36
	1	p15	BAR3/8"X10"	0'-11 1/2"	12			A992

STEEL ASTM	A992	UNO
ELECTRODES	E70XX L.H.	UNO
WELDS	1/4" FILLET	UNO
OPEN HOLES	13/16" UNO	FINISH PER SPECS
BOLTS	3/4" A325N	UNO
PAINT	1 S/C STD PRIMER U.N.O.	UNO

PROJECT NAME
OLDE ORCHARD ELEMENTARY SCHOOL
LOCATION
800 McNAUGHTEN RD. COLUMBUS, OHIO 43213
CONTRACTOR
THOMAS AND MARKER CONSTRUCTION
ARCHITECT
BRAUN & STEIDL

DATE	NO.	DESCRIPTION	BY
5/28/11	B	For Checking	TMc
5/16/11	A	For Approval	TMc

North Central Fabrication, Ltd.

NORTH CENTRAL FABRICATION
Mansfield, OH 44906
419-529-2744 FAX 419-529-5387 http://www.northcentralfab

AISC CERTIFIED FABRICATOR

DESCRIPTION	DATE	DATE	JOB No.
COLUMN	05/15/2011		70234
	DRAWN BY TMc	CHECKED BY TAN	DRG No. C14

GRID LOCATION	BOTTOM ELEVATION
E.2-E.7/	114'-0"
E.7/1>	114'-0"

PHASE				
1	2	3	4	5
2	0	0	0	0

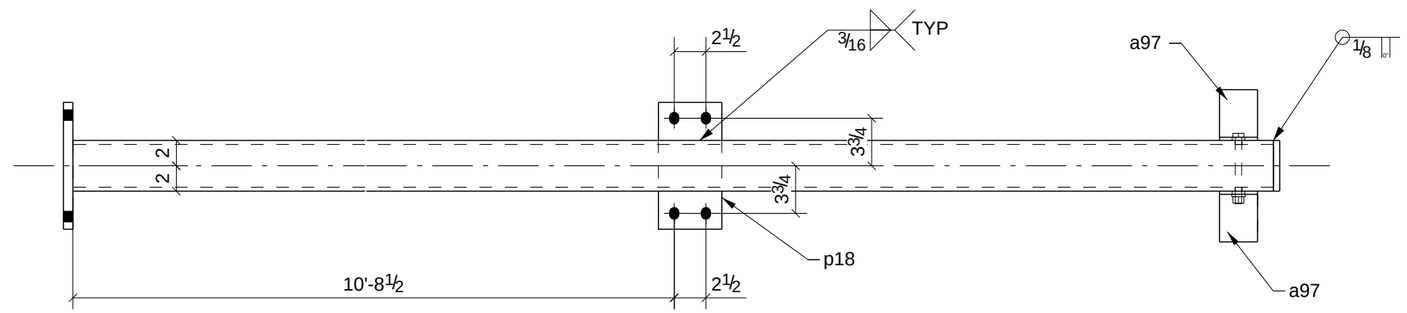

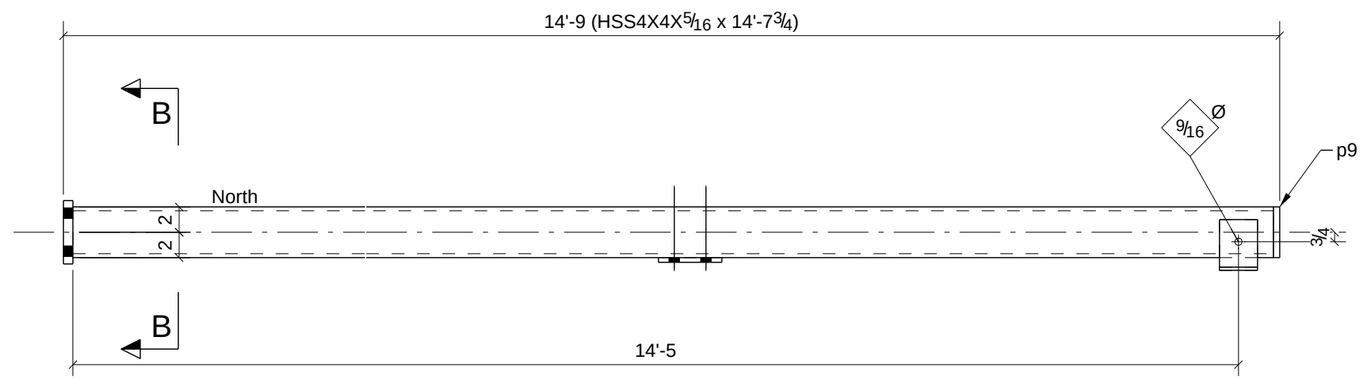

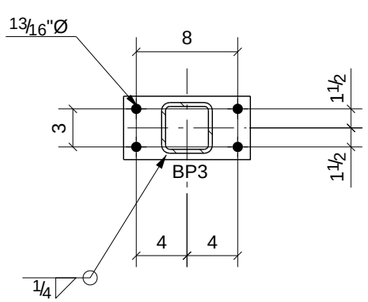

B - B

PROCESS CONTROL
PROCESS BY
FAB: _____
FIT AND WELD: _____
INSPECTION: _____
OTHER (IF NEEDED) _____
_____ : _____
_____ : _____
_____ : _____
_____ : _____
REFERENCE LATEST ERECTION DRAWINGS FOR MATERIAL & FABRICATION INFORMATION

2 - COLUMNS - C15

BILL OF MATERIAL

Qty Ea.	Qty Tot	Piece Mark	Description	Length	Weight Total	Remarks	Adv Mill #	Steel Grade
	2	C15	COLUMNS					
	2		HSS4X4X5/16	14'-7 3/4"	409	SQ-2		A500-GR.B
	2	BP3	BAR3/4"X5"	0'-10"	21			A36
	4	a97	L4X4X1/4	0'-3"	7			A36
	2	p9	BAR1/2"X4"	0'-4"	5			A36
	2	p18	BAR3/8"X5"	0'-10"	11			A992
	2		1/2"Ø A325N BOLT	0'-5 1/4"	1			

STEEL ASTM	A992	UNO
ELECTRODES	E70XX L.H.	UNO
WELDS	1/4" FILLET	UNO
OPEN HOLES	13/16" UNO	FINISH PER SPECS
BOLTS	3/4" A325N	UNO
PAINT	1 S/C STD PRIMER U.N.O.	UNO

PROJECT NAME
OLDE ORCHARD ELEMENTARY SCHOOL
LOCATION
800 McNAUGHTEN RD. COLUMBUS, OHIO 43213
CONTRACTOR
THOMAS AND MARKER CONSTRUCTION
ARCHITECT
BRAUN & STEIDL

DATE	NO.	DESCRIPTION	BY
5/28/11	B	For Checking	TMc
5/16/11	A	For Approval	TMc

North Central Fabrication, Ltd.

NORTH CENTRAL FABRICATION
Mansfield, OH 44906
419-529-2744 FAX 419-529-5387 http://www.northcentralfab

AISC CERTIFIED FABRICATOR

DESCRIPTION: COLUMN	DATE: 05/15/2011	DATE	JOB No. 70234
	DRAWN BY: TMc	CHECKED BY: TAN	DRG No. C15

GRID LOCATION	BOTTOM ELEVATION
H.2-J.1/	99'-5"
H.2-J.1/	99'-5"

PHASE				
1	2	3	4	5
2	0	0	0	0

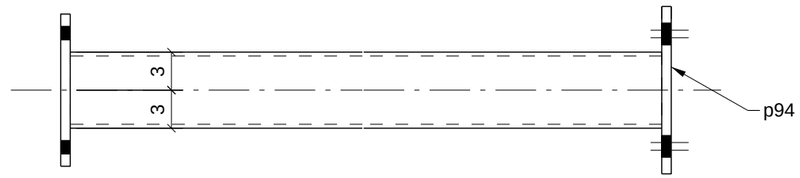

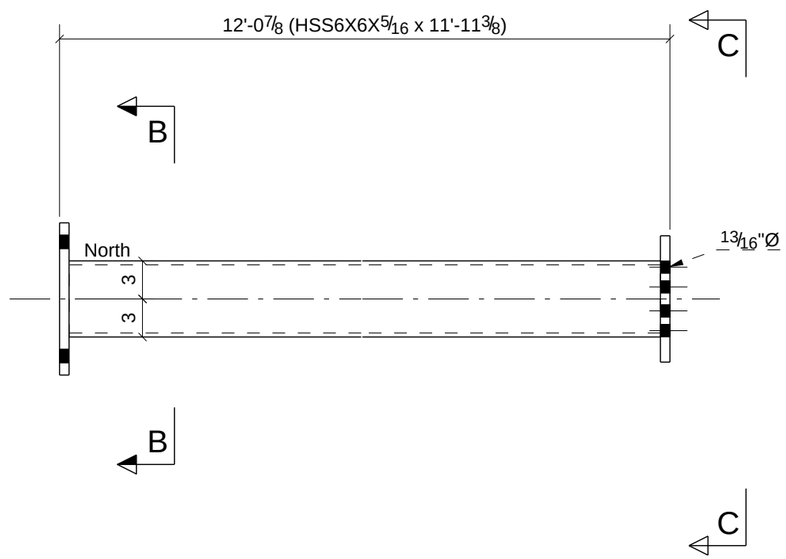

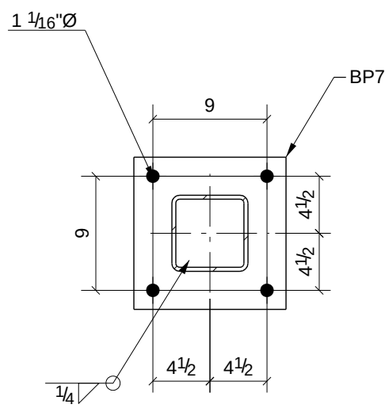

B - B

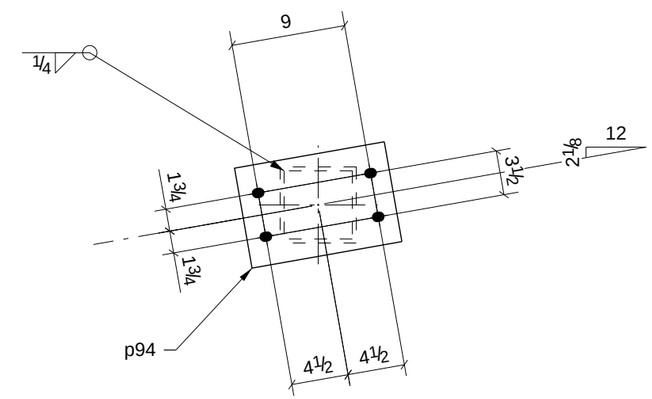

C - C

PROCESS CONTROL
PROCESS BY
FAB: _____
FIT AND WELD: _____
INSPECTION: _____
OTHER (IF NEEDED)
_____ : _____
_____ : _____
_____ : _____
_____ : _____
_____ : _____
REFERENCE LATEST ERECTION DRAWINGS FOR MATERIAL & FABRICATION INFORMATION

2 - COLUMNS - C16

BILL OF MATERIAL

Qty Ea.	Qty Tot	Piece Mark	Description	Length	Weight Total	Remarks	Adv Mill #	Steel Grade
	2	C16	COLUMNS					
	2		HSS6X6X5/16	11'-11 3/8"	523	SQ-2		A500-GR.B
	2	BP7	BAR3/4"X12"	1'-0"	61			A36
	2	p94	BAR3/4"X8"	1'-0"	41			A36

STEEL ASTM	A992	UNO
ELECTRODES	E70XX L.H.	UNO
WELDS	1/4" FILLET	UNO
OPEN HOLES	13/16" UNO	FINISH PER SPECS
BOLTS	3/4" A325N	UNO
PAINT	1 S/C STD PRIMER U.N.O.	UNO

PROJECT NAME
OLDE ORCHARD ELEMENTARY SCHOOL
LOCATION
800 McNAUGHTEN RD. COLUMBUS, OHIO 43213
CONTRACTOR
THOMAS AND MARKER CONSTRUCTION
ARCHITECT
BRAUN & STEIDL

DATE	NO.	DESCRIPTION	BY
5/28/11	B	For Checking	TMc
5/16/11	A	For Approval	TMc

North Central Fabrication, Ltd.
NORTH CENTRAL FABRICATION
Mansfield, OH 44906
419-529-2744 FAX 419-529-5387 http://www.northcentralfab
AISC CERTIFIED FABRICATOR

DESCRIPTION	DATE	DATE	JOB No.
COLUMN	05/27/2011		70234
	DRAWN BY TMc	CHECKED BY TAN	DRG No. C16

GRID LOCATION	BOTTOM ELEVATION
E.7-F/1>	114'-0"

PHASE				
1	2	3	4	5
1	0	0	0	0

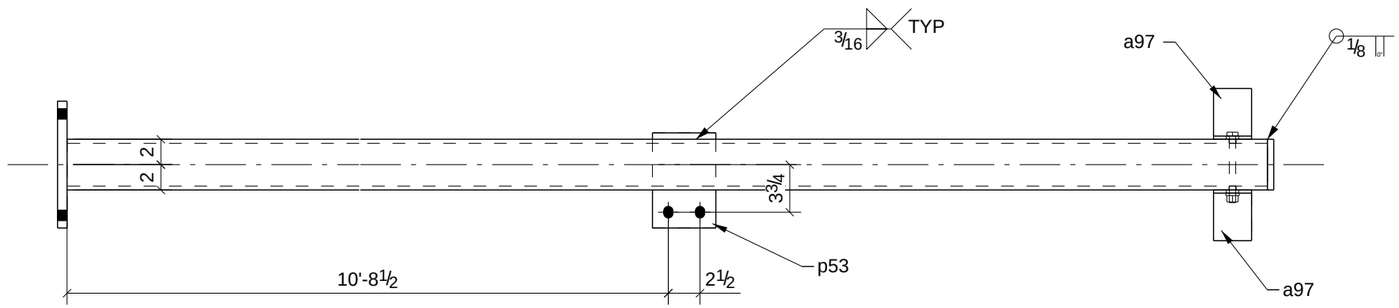

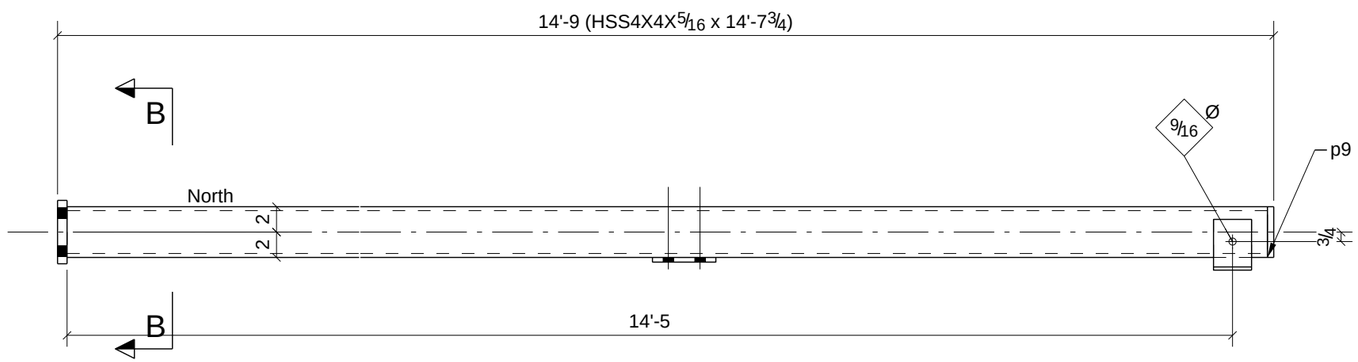

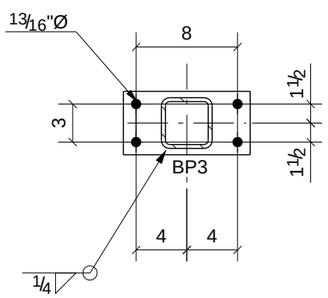

B - B

PROCESS CONTROL
PROCESS BY
FAB: _____
FIT AND WELD: _____
INSPECTION: _____
OTHER (IF NEEDED) _____
_____ : _____
_____ : _____
_____ : _____
_____ : _____
REFERENCE LATEST ERECTION DRAWINGS FOR MATERIAL & FABRICATION INFORMATION

ONE - COLUMN - C17

BILL OF MATERIAL

Qty Ea.	Qty Tot	Piece Mark	Description	Length	Weight Total	Remarks	Adv Mill #	Steel Grade
	1	C17	COLUMN					
	1		HSS4X4X5/16	14'-7 3/4"	204	SQ-2		A500-GR.B
	1	BP3	BAR3/4"X5"	0'-10"	11			A36
	2	a97	L4X4X1/4	0'-3"	3			A36
	1	p9	BAR1/2"X4"	0'-4"	2			A36
	1	p53	BAR3/8"X5"	0'-7 1/2"	4			A992
	1		1/2"Ø A325N BOLT	0'-5 1/4"	0			

STEEL ASTM	A992	UNO
ELECTRODES	E70XX L.H.	UNO
WELDS	1/4" FILLET	UNO
OPEN HOLES	13/16" UNO	FINISH PER SPECS
BOLTS	3/4" A325N	UNO
PAINT	1 S/C STD PRIMER U.N.O.	UNO

PROJECT NAME
OLDE ORCHARD ELEMENTARY SCHOOL
LOCATION
800 McNAUGHTEN RD. COLUMBUS, OHIO 43213
CONTRACTOR
THOMAS AND MARKER CONSTRUCTION
ARCHITECT
BRAUN & STEIDL

DATE	NO.	DESCRIPTION	BY
5/28/11	B	For Checking	TMc
5/16/11	A	For Approval	TMc

North Central Fabrication, Ltd.

NORTH CENTRAL FABRICATION
Mansfield, OH 44906
419-529-2744 FAX 419-529-5387 http://www.northcentralfab

AISC CERTIFIED FABRICATOR

DESCRIPTION	DATE	DATE	JOB No.
COLUMN	05/15/2011		70234
	DRAWN BY TMc	CHECKED BY TAN	DRG No. C17

GRID LOCATION	BOTTOM ELEVATION
F-F.2/2-	128'-0"1/2

PHASE				
1	2	3	4	5
1	0	0	0	0

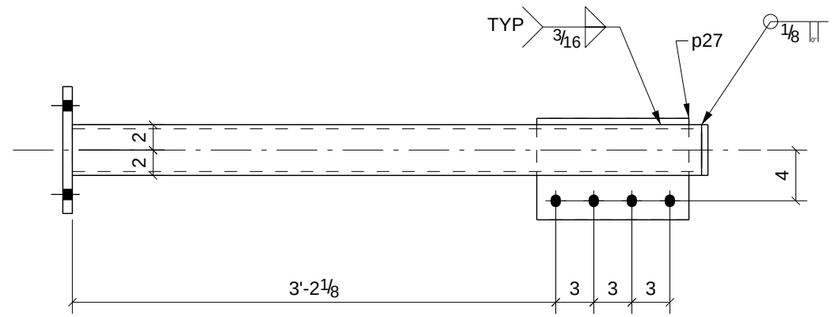

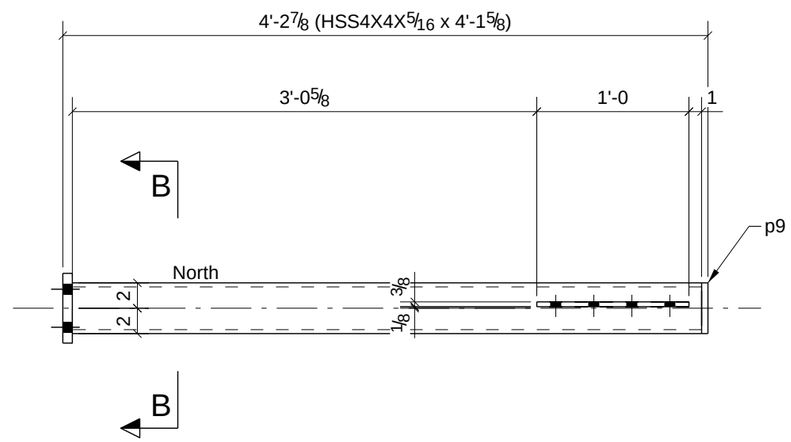

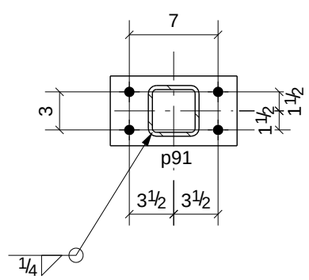

B - B

PROCESS CONTROL
PROCESS BY
FAB: _____
FIT AND WELD: _____
INSPECTION: _____
OTHER (IF NEEDED) _____
_____ : _____
_____ : _____
_____ : _____
_____ : _____
REFERENCE LATEST ERECTION DRAWINGS FOR MATERIAL & FABRICATION INFORMATION

ONE - COLUMN - C19

BILL OF MATERIAL

Qty Ea.	Qty Tot	Piece Mark	Description	Length	Weight Total	Remarks	Adv Mill #	Steel Grade
	1	C19	COLUMN					
	1		HSS4X4X5/16	4'-1 5/8"	58	SQ-2		A500-GR.B
	1	p9	BAR1/2"X4"	0'-4"	2			A36
	1	p27	BAR3/8"X8"	1'-0"	10			A36
	1	p91	BAR3/4"X5 1/2"	0'-10"	12			A36

STEEL ASTM	A992	UNO
ELECTRODES	E70XX L.H.	UNO
WELDS	1/4" FILLET	UNO
OPEN HOLES	13/16" UNO	FINISH PER SPECS
BOLTS	3/4" A325N	UNO
PAINT	1 S/C STD PRIMER U.N.O.	UNO

PROJECT NAME
OLDE ORCHARD ELEMENTARY SCHOOL

LOCATION
800 McNAUGHTEN RD. COLUMBUS, OHIO 43213

CONTRACTOR
THOMAS AND MARKER CONSTRUCTION

ARCHITECT
BRAUN & STEIDL

DATE	NO.	DESCRIPTION	BY
5/28/11	B	For Checking	TMc
5/16/11	A	For Approval	TMc

North Central Fabrication, Ltd.

NORTH CENTRAL FABRICATION
Mansfield, OH 44906
419-529-2744 FAX 419-529-5387 http://www.northcentralfab

AISC CERTIFIED FABRICATOR

DESCRIPTION	DATE	DATE	JOB No.
COLUMN	05/15/2011		70234
	DRAWN BY TMc	CHECKED BY TAN	DRG No. C19

GRID LOCATION	BOTTOM ELEVATION
F-F.2/1>	114'-0"

PHASE				
1	2	3	4	5
1	0	0	0	0

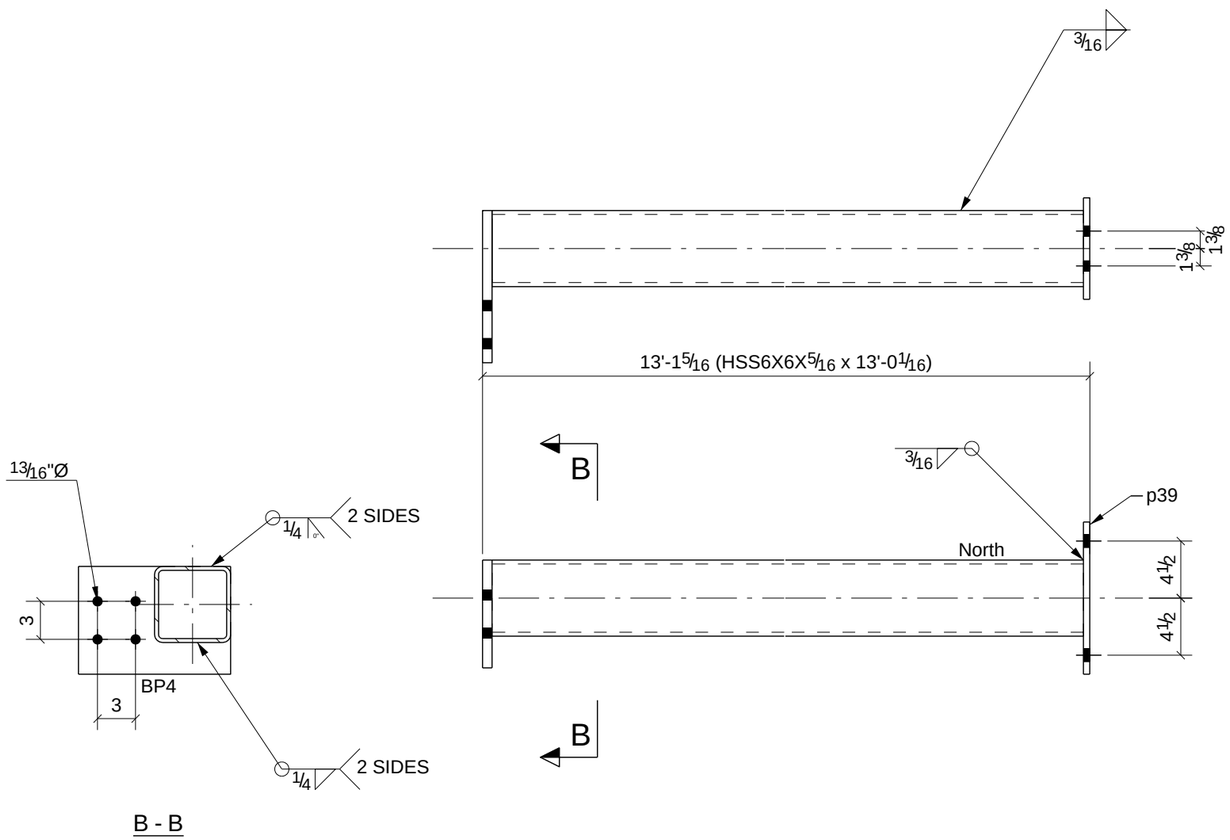

ONE - COLUMN - C20

PROCESS CONTROL
PROCESS BY
FAB: _____
FIT AND WELD: _____
INSPECTION: _____
OTHER (IF NEEDED) _____
_____ : _____
_____ : _____
_____ : _____
_____ : _____
REFERENCE LATEST ERECTION DRAWINGS FOR MATERIAL & FABRICATION INFORMATION

BILL OF MATERIAL

Qty Ea.	Qty Tot	Piece Mark	Description	Length	Weight Total	Remarks	Adv Mill #	Steel Grade
	1	C20	COLUMN					
	1		HSS6X6X5/16	13'-0 1/16"	285	SQ-2		A500-GR.B
	1	BP4	BAR3/4"X8 1/2"	1'-0"	22			A36
	1	p39	BAR1/2"X8"	1'-0"	14			A36

STEEL ASTM	A992	UNO
ELECTRODES	E70XX L.H.	UNO
WELDS	1/4" FILLET	UNO
OPEN HOLES	13/16" UNO	FINISH PER SPECS
BOLTS	3/4" A325N	UNO
PAINT	1 S/C STD PRIMER U.N.O.	UNO

PROJECT NAME
OLDE ORCHARD ELEMENTARY SCHOOL
LOCATION
800 McNAUGHTEN RD. COLUMBUS, OHIO 43213
CONTRACTOR
THOMAS AND MARKER CONSTRUCTION
ARCHITECT
BRAUN & STEIDL

DATE	NO.	DESCRIPTION	BY
5/28/11	B	For Checking	TMc
5/16/11	A	For Approval	TMc

North Central Fabrication, Ltd.

NORTH CENTRAL FABRICATION
Mansfield, OH 44906
419-529-2744 FAX 419-529-5387 http://www.northcentralfab

AISC CERTIFIED FABRICATOR

DESCRIPTION	DATE	DATE	JOB No.
COLUMN	05/15/2011		70234
	DRAWN BY TMc	CHECKED BY TAN	DRG No. C20

GRID LOCATION	BOTTOM ELEVATION
F.2-F.7/	113'-5"1/2

PHASE				
1	2	3	4	5
1	0	0	0	0

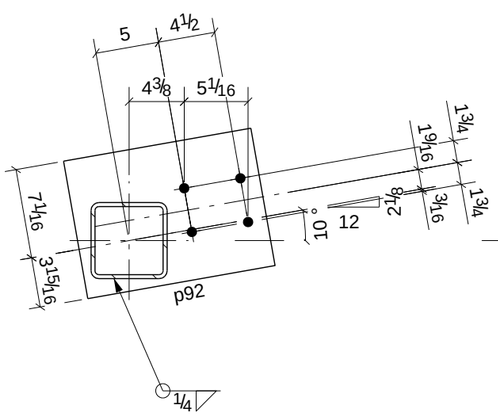

A - A

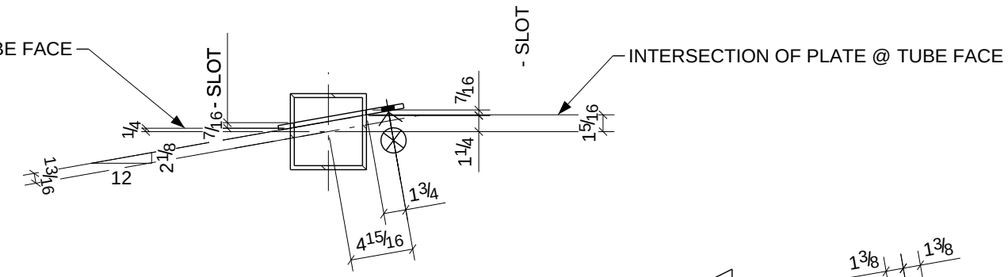

B - B

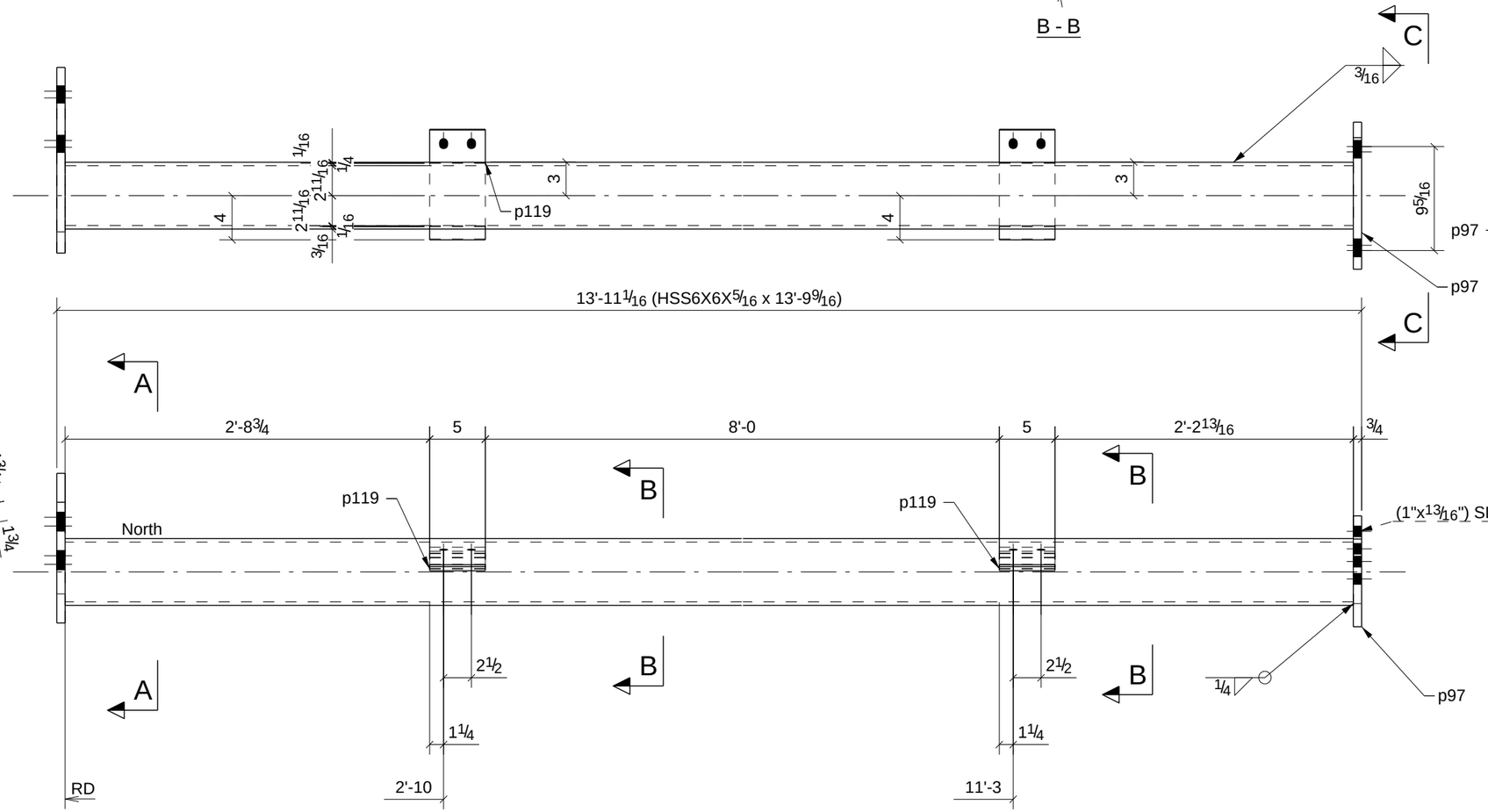

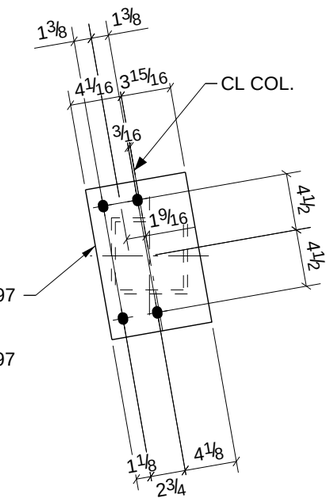

C - C

PROCESS CONTROL
PROCESS BY
FAB: _____
FIT AND WELD: _____
INSPECTION: _____
OTHER (IF NEEDED)
_____ : _____
_____ : _____
_____ : _____
_____ : _____
_____ : _____
REFERENCE LATEST ERECTION DRAWINGS FOR MATERIAL & FABRICATION INFORMATION

ONE - COLUMN - C21

BILL OF MATERIAL

Qty Ea.	Qty Tot	Piece Mark	Description	Length	Weight Total	Remarks	Adv Mill #	Steel Grade
	1	C21	COLUMN					
	1		HSS6X6X5/16	13'-9 9/16"	302	SQ-2		A500-GR.B
	1	p92	BAR3/4"X11"	1'-3"	35			A36
	1	p97	BAR3/4"X8"	1'-0"	20			A36
	2	p119	BAR3/8"X5"	0'-10"	11			A992

STEEL ASTM	A992	UNO
ELECTRODES	E70XX L.H.	UNO
WELDS	1/4" FILLET	UNO
OPEN HOLES	13/16" UNO	FINISH PER SPECS
BOLTS	3/4" A325N	UNO
PAINT	1 S/C STD PRIMER U.N.O.	UNO

PROJECT NAME
OLDE ORCHARD ELEMENTARY SCHOOL
LOCATION
800 McNAUGHTEN RD. COLUMBUS, OHIO 43213
CONTRACTOR
THOMAS AND MARKER CONSTRUCTION
ARCHITECT
BRAUN & STEIDL

DATE	NO.	DESCRIPTION	BY
5/28/11	B	For Checking	TMc
5/16/11	A	For Approval	TMc

North Central Fabrication, Ltd.
NORTH CENTRAL FABRICATION
Mansfield, OH 44906
419-529-2744 FAX 419-529-5387 http://www.northcentralfab
AISC CERTIFIED FABRICATOR

DESCRIPTION	DATE	DATE	JOB No.
COLUMN	05/15/2011		70234
	DRAWN BY TMc	CHECKED BY TAN	DRG No. C21

GRID LOCATION	BOTTOM ELEVATION
F.7/1>	97'-5"

PHASE				
1	2	3	4	5
1	0	0	0	0

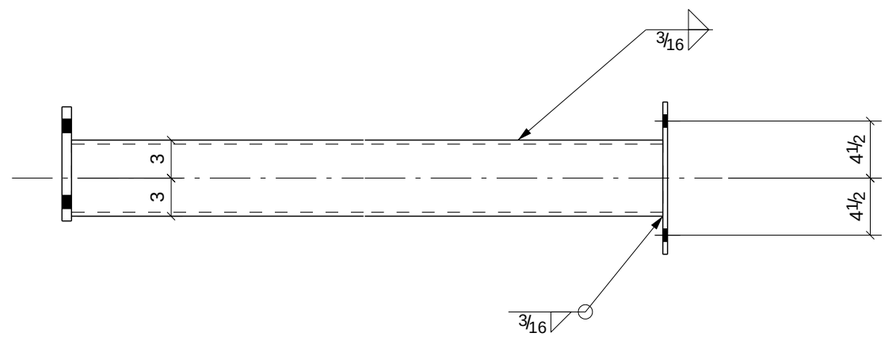

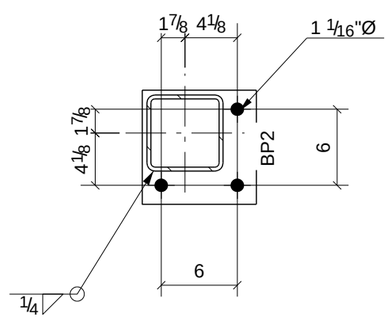

B - B

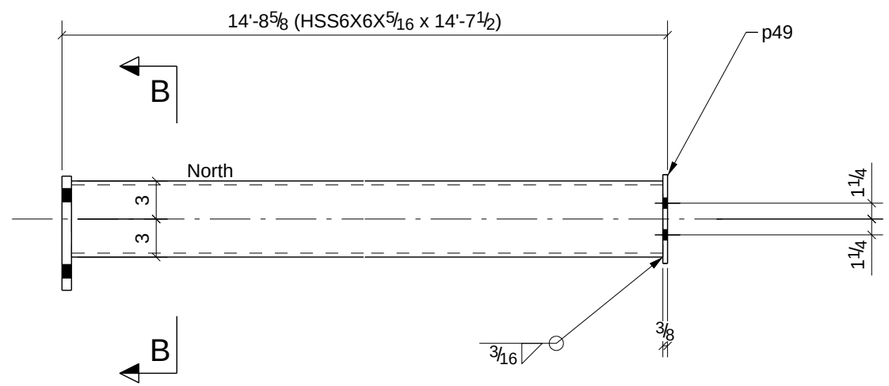

PROCESS CONTROL
PROCESS BY
FAB: _____
FIT AND WELD: _____
INSPECTION: _____
OTHER (IF NEEDED) _____
_____ : _____
_____ : _____
_____ : _____
_____ : _____
REFERENCE LATEST ERECTION DRAWINGS FOR MATERIAL & FABRICATION INFORMATION

ONE - COLUMN - C22

BILL OF MATERIAL

Qty Ea.	Qty Tot	Piece Mark	Description	Length	Weight Total	Remarks	Adv Mill #	Steel Grade
	1	C22	COLUMN					
	1		HSS6X6X5/16	14'-7 1/2"	320	SQ-2		A500-GR.B
	1	BP2	BAR3/4"X9"	0'-9"	17			A36
	1	p49	BAR3/8"X7"	1'-0"	9			A36

STEEL ASTM	A992	UNO
ELECTRODES	E70XX L.H.	UNO
WELDS	1/4" FILLET	UNO
OPEN HOLES	13/16" UNO	FINISH PER SPECS
BOLTS	3/4" A325N	UNO
PAINT	1 S/C STD PRIMER U.N.O.	UNO

PROJECT NAME
OLDE ORCHARD ELEMENTARY SCHOOL
LOCATION
800 McNAUGHTEN RD. COLUMBUS, OHIO 43213
CONTRACTOR
THOMAS AND MARKER CONSTRUCTION
ARCHITECT
BRAUN & STEIDL

DATE	NO.	DESCRIPTION	BY
5/28/11	B	For Checking	TMc
5/16/11	A	For Approval	TMc

North Central Fabrication, Ltd.

NORTH CENTRAL FABRICATION
Mansfield, OH 44906
419-529-2744 FAX 419-529-5387 http://www.northcentralfab

AISC CERTIFIED FABRICATOR

DESCRIPTION	DATE	DATE	JOB No.
COLUMN	05/15/2011		70234
	DRAWN BY TMc	CHECKED BY TAN	DRG No. C22

GRID LOCATION	BOTTOM ELEVATION
F.8/1>	114'-0"

PHASE				
1	2	3	4	5
1	0	0	0	0

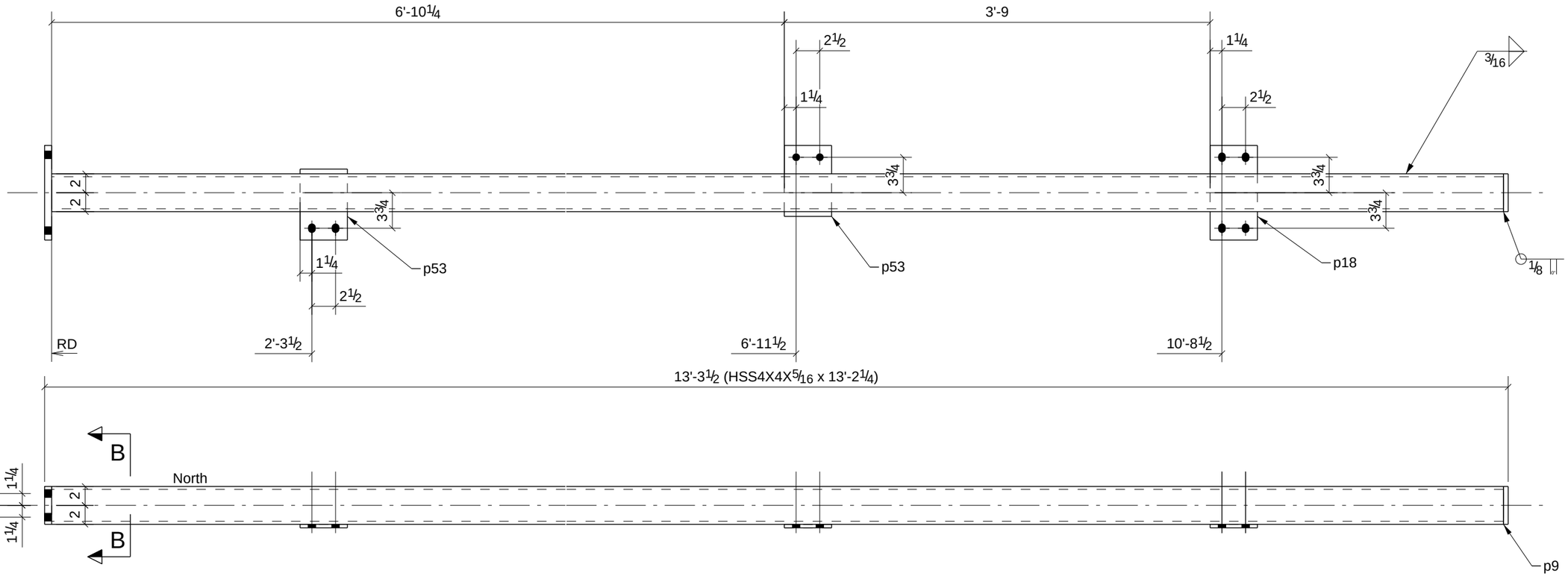

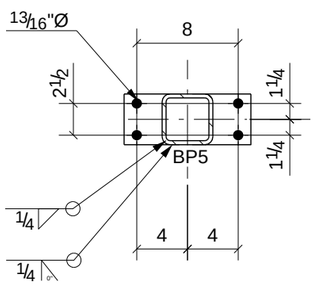

B - B

PROCESS CONTROL
PROCESS BY
FAB: _____
FIT AND WELD: _____
INSPECTION: _____
OTHER (IF NEEDED) _____
REFERENCE LATEST ERECTION DRAWINGS FOR MATERIAL & FABRICATION INFORMATION

ONE - COLUMN - C23

BILL OF MATERIAL

Qty Ea.	Qty Tot	Piece Mark	Description	Length	Weight Total	Remarks	Adv Mill #	Steel Grade
	1	C23	COLUMN					
	1		HSS4X4X5/16	13'-2 1/4"	184	SQ-2		A500-GR.B
	1	BP5	BAR3/4"X4"	0'-10"	9			A36
	1	p9	BAR1/2"X4"	0'-4"	2			A36
	1	p18	BAR3/8"X5"	0'-10"	5			A992
	2	p53	BAR3/8"X5"	0'-7 1/2"	8			A992

STEEL ASTM	A992	UNO
ELECTRODES	E70XX L.H.	UNO
WELDS	1/4" FILLET	UNO
OPEN HOLES	13/16" UNO	FINISH PER SPECS
BOLTS	3/4" A325N	UNO
PAINT	1 S/C STD PRIMER U.N.O.	UNO

PROJECT NAME
OLDE ORCHARD ELEMENTARY SCHOOL

LOCATION
800 McNAUGHTEN RD. COLUMBUS, OHIO 43213

CONTRACTOR
THOMAS AND MARKER CONSTRUCTION

ARCHITECT
BRAUN & STEIDL

DATE	NO.	DESCRIPTION	BY
5/28/11	B	For Checking	TMc
5/16/11	A	For Approval	TMc

North Central Fabrication, Ltd.
NORTH CENTRAL FABRICATION
Mansfield, OH 44906
419-529-2744 FAX 419-529-5387 http://www.northcentralfab
AISC CERTIFIED FABRICATOR

DESCRIPTION	DATE	DATE	JOB No.
COLUMN	05/15/2011		70234
	DRAWN BY TMc	CHECKED BY TAN	DRG No. C23

GRID LOCATION	BOTTOM ELEVATION
G.2-G.7/	99'-5"

PHASE				
1	2	3	4	5
1	0	0	0	0

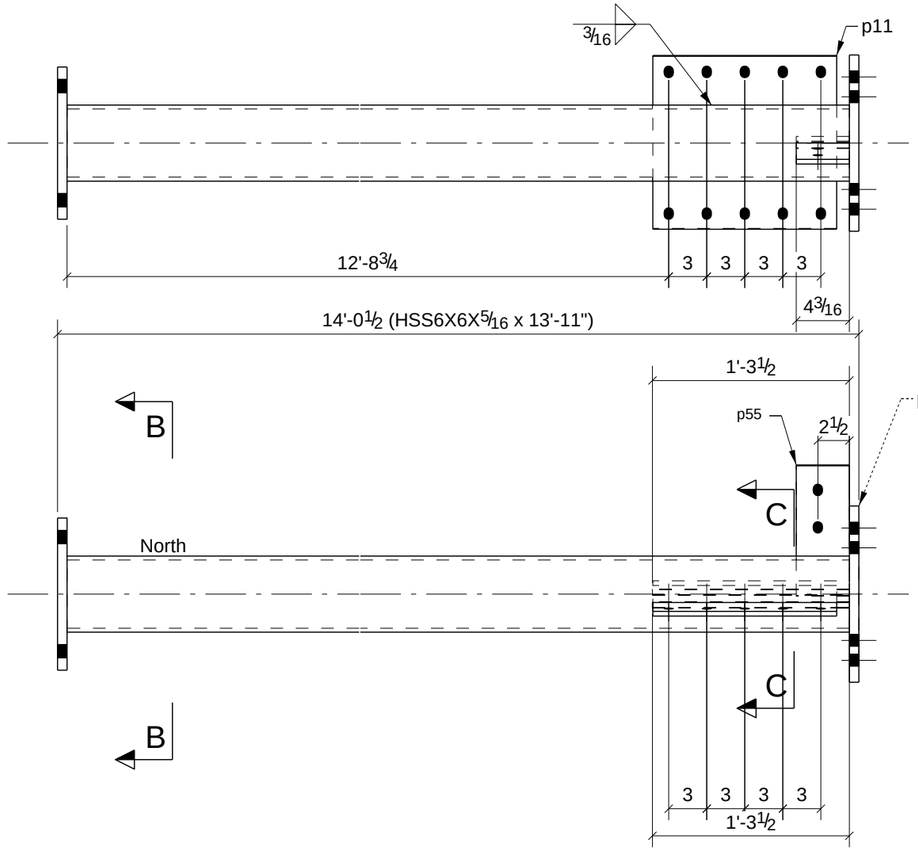

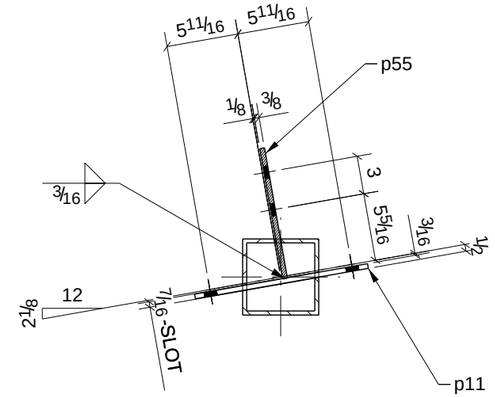

C - C

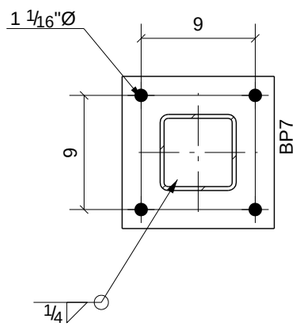

B - B

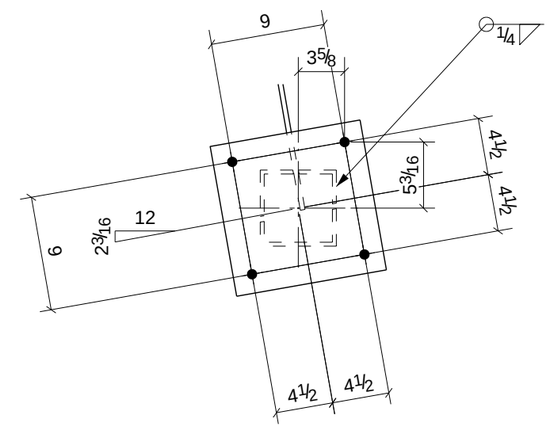

D - D

PROCESS CONTROL
PROCESS BY
FAB: _____
FIT AND WELD: _____
INSPECTION: _____
OTHER (IF NEEDED) _____
_____ : _____
_____ : _____
_____ : _____
_____ : _____
REFERENCE LATEST ERECTION DRAWINGS FOR MATERIAL & FABRICATION INFORMATION

ONE - COLUMN - C25

BILL OF MATERIAL

Qty Ea.	Qty Tot	Piece Mark	Description	Length	Weight Total	Remarks	Adv Mill #	Steel Grade
	1	C25	COLUMN					
	1		HSS6X6X5/16	13'-11"	305	SQ-2		A500-GR.B
	1	BP7	BAR3/4"X12"	1'-0"	31			A36
	1	p11	PL3/8"X13 7/8"	1'-2 1/2"	21			A992
	1	p55	PL3/8"X4 3/16"	0'-10 7/16"	5			A36
	1	p86	BAR3/4"X12"	1'-0"	31			A36

STEEL ASTM	A992		UNO
ELECTRODES	E70XX L.H.		UNO
WELDS	1/4" FILLET		UNO
OPEN HOLES	13/16" UNO	FINISH	PER SPECS
BOLTS	3/4" A325N		UNO
PAINT	1 S/C STD PRIMER U.N.O.		UNO

PROJECT NAME
OLDE ORCHARD ELEMENTARY SCHOOL
LOCATION
800 McNAUGHTEN RD. COLUMBUS, OHIO 43213
CONTRACTOR
THOMAS AND MARKER CONSTRUCTION
ARCHITECT
BRAUN & STEIDL

DATE	NO.	DESCRIPTION	BY
5/28/11	B	For Checking	TMc
5/16/11	A	For Approval	TMc

North Central Fabrication, Ltd.

NORTH CENTRAL FABRICATION
Mansfield, OH 44906
419-529-2744 FAX 419-529-5387 http://www.northcentralfab

AISC CERTIFIED FABRICATOR

DESCRIPTION	DATE	DATE	JOB No.
COLUMN	05/15/2011		70234
	DRAWN BY TMc	CHECKED BY TAN	DRG No. C25

GRID LOCATION	BOTTOM ELEVATION
G.2-G.7/	113'-5"1/2

PHASE				
1	2	3	4	5
1	0	0	0	0

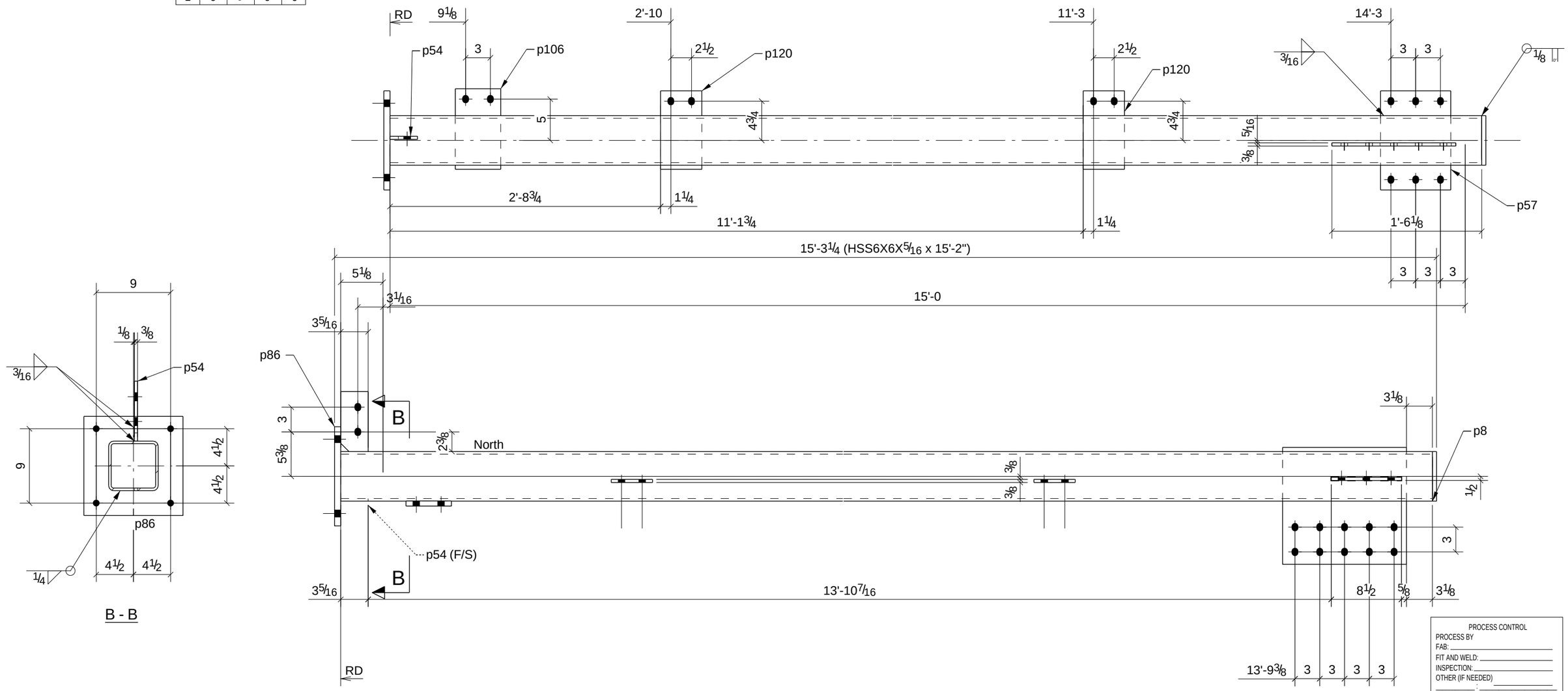

PROCESS CONTROL
PROCESS BY
FAB: _____
FIT AND WELD: _____
INSPECTION: _____
OTHER (IF NEEDED) _____
REFERENCE LATEST ERECTION DRAWINGS FOR MATERIAL & FABRICATION INFORMATION

BILL OF MATERIAL

Qty Ea.	Qty Tot	Piece Mark	Description	Length	Weight Total	Remarks	Adv Mill #	Steel Grade
	1	C26	COLUMN					
	1		HSS6X6X5/16	15'-2"	332	SQ-2		A500-GR.B
	1	p8	BAR1/2"X6"	0'-6"	5			A36
	1	p54	PL3/8"X3 5/16"	0'-7 1/4"	3			A36
	1	p56	PL3/8"X14 1/8"	1'-3"	22			A36
	1	p57	BAR3/8"X8 1/2"	1'-0"	11			A992
	1	p86	BAR3/4"X12"	1'-0"	31			A36
	1	p106	BAR5/8"X5 1/2"	0'-9 3/4"	10			A992
	2	p120	BAR3/8"X5"	0'-9 1/2"	10			A992

ONE - COLUMN - C26

DATE	NO.	DESCRIPTION	BY
5/28/11	B	For Checking	TMc
5/16/11	A	For Approval	TMc

STEEL ASTM	A992	UNO
ELECTRODES	E70XX L.H.	UNO
WELDS	1/4" FILLET	UNO
OPEN HOLES	13/16" UNO	FINISH PER SPECS
BOLTS	3/4" A325N	UNO
PAINT	1 S/C STD PRIMER U.N.O.	UNO

PROJECT NAME
OLDE ORCHARD ELEMENTARY SCHOOL

LOCATION
800 McNAUGHTEN RD. COLUMBUS, OHIO 43213

CONTRACTOR
THOMAS AND MARKER CONSTRUCTION

ARCHITECT
BRAUN & STEIDL

North Central Fabrication, Ltd.
NORTH CENTRAL FABRICATION
Mansfield, OH 44906
419-529-2744 FAX 419-529-5387 http://www.northcentralfab
AISC CERTIFIED FABRICATOR

DESCRIPTION	DATE	DATE	JOB No.
COLUMN	05/15/2011		70234
	DRAWN BY TMc	CHECKED BY TAN	DRG No. C26

GRID LOCATION	BOTTOM ELEVATION
G.8/1>	113'-5"1/2

PHASE				
1	2	3	4	5
1	0	0	0	0

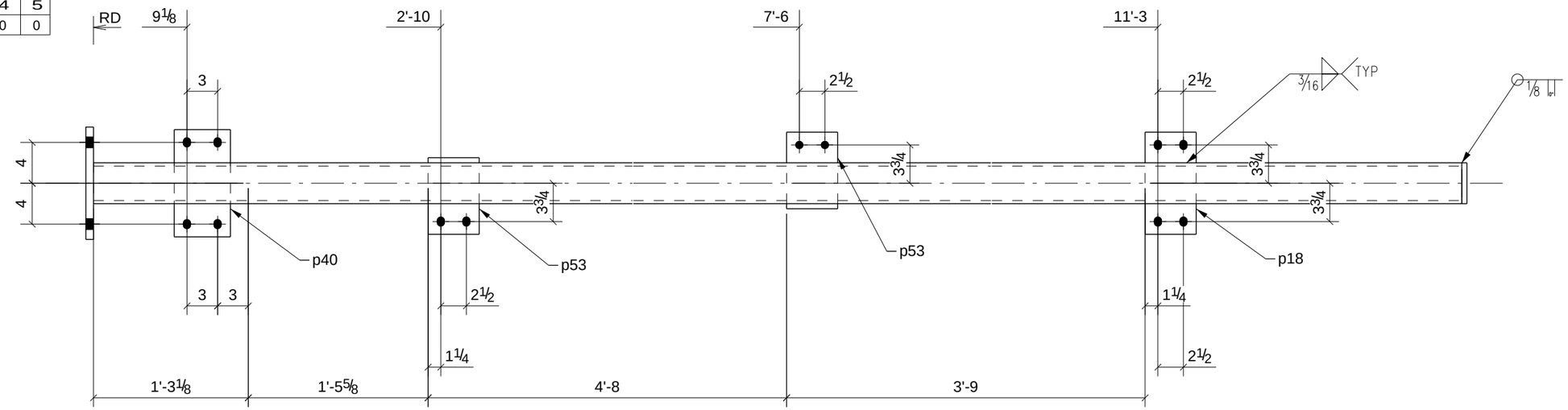

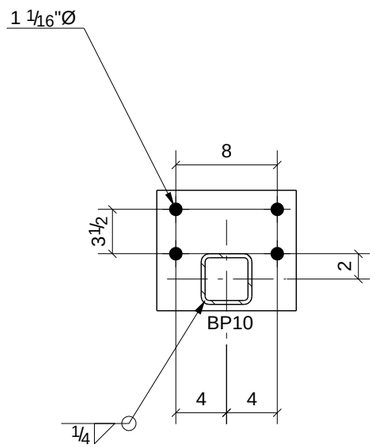

B - B

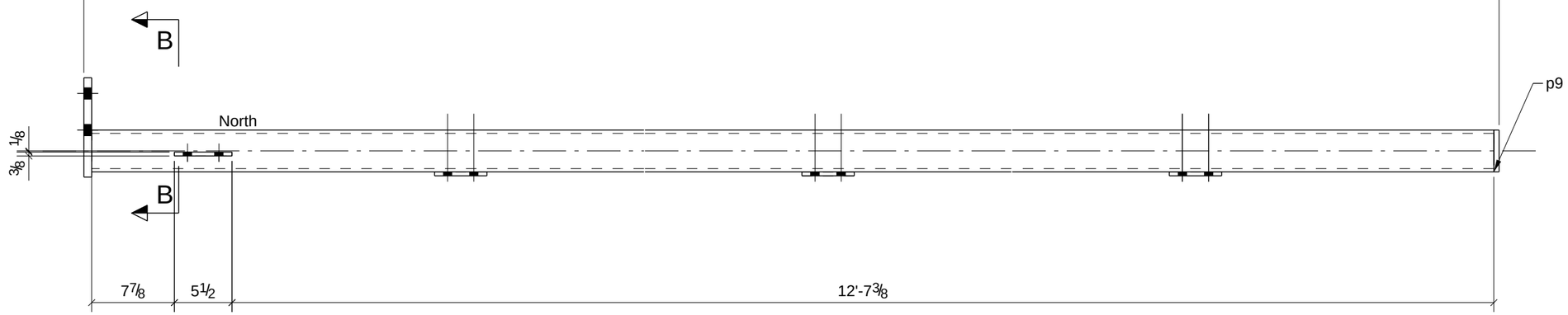

PROCESS CONTROL
PROCESS BY
FAB: _____
FIT AND WELD: _____
INSPECTION: _____
OTHER (IF NEEDED)
_____ : _____
_____ : _____
_____ : _____
_____ : _____
_____ : _____
REFERENCE LATEST ERECTION DRAWINGS FOR MATERIAL & FABRICATION INFORMATION

ONE - COLUMN - C27

BILL OF MATERIAL

Qty Ea.	Qty Tot	Piece Mark	Description	Length	Weight Total	Remarks	Adv Mill #	Steel Grade
	1	C27	COLUMN					
	1		HSS4X4X5/16	13'-8 3/4"	192	SQ-2		A500-GR.B
	1	BP10	BAR3/4"X9 1/2"	0'-11"	22			A36
	1	p9	BAR1/2"X4"	0'-4"	2			A36
	1	p18	BAR3/8"X5"	0'-10"	5			A992
	1	p40	BAR3/8"X5 1/2"	0'-10 1/2"	6			A992
	2	p53	BAR3/8"X5"	0'-7 1/2"	8			A992

STEEL ASTM	A992	UNO	
ELECTRODES	E70XX L.H.	UNO	
WELDS	1/4" FILLET	UNO	
OPEN HOLES	13/16"	UNO	FINISH PER SPECS
BOLTS	3/4" A325N	UNO	
PAINT	1 S/C STD PRIMER U.N.O.	UNO	

PROJECT NAME
OLDE ORCHARD ELEMENTARY SCHOOL
LOCATION
800 McNAUGHTEN RD. COLUMBUS, OHIO 43213
CONTRACTOR
THOMAS AND MARKER CONSTRUCTION
ARCHITECT
BRAUN & STEIDL

DATE	NO.	DESCRIPTION	BY
5/28/11	B	For Checking	TMc
5/16/11	A	For Approval	TMc

North Central Fabrication, Ltd.
NORTH CENTRAL FABRICATION
Mansfield, OH 44906
419-529-2744 FAX 419-529-5387 http://www.northcentralfab
AISC CERTIFIED FABRICATOR

DESCRIPTION	DATE	DATE	JOB No.
COLUMN	05/15/2011		70234
	DRAWN BY TMc	CHECKED BY TAN	DRG No. C27

GRID LOCATION	BOTTOM ELEVATION
G.9/1>	113'-5"1/2

PHASE				
1	2	3	4	5
1	0	0	0	0

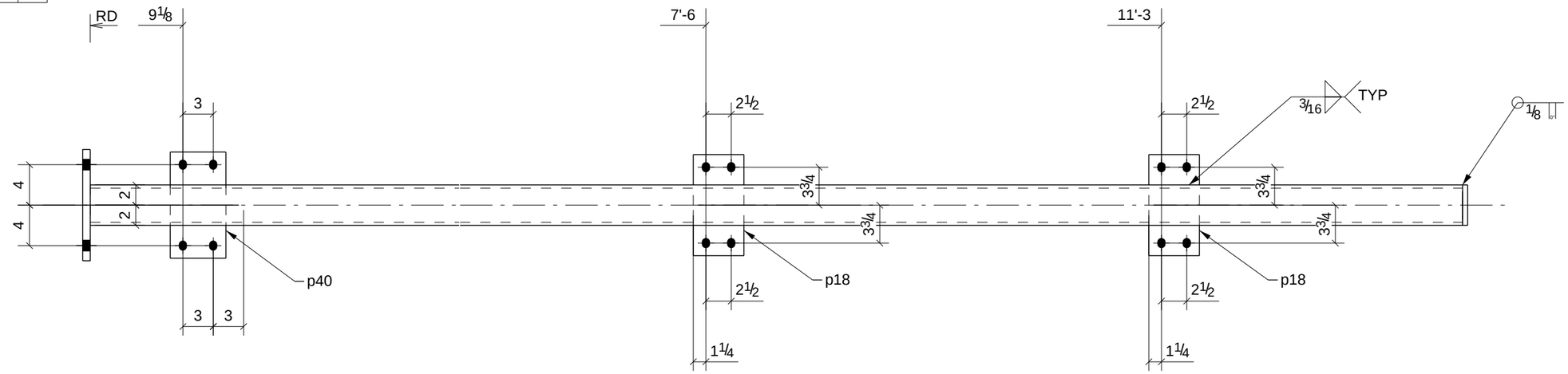

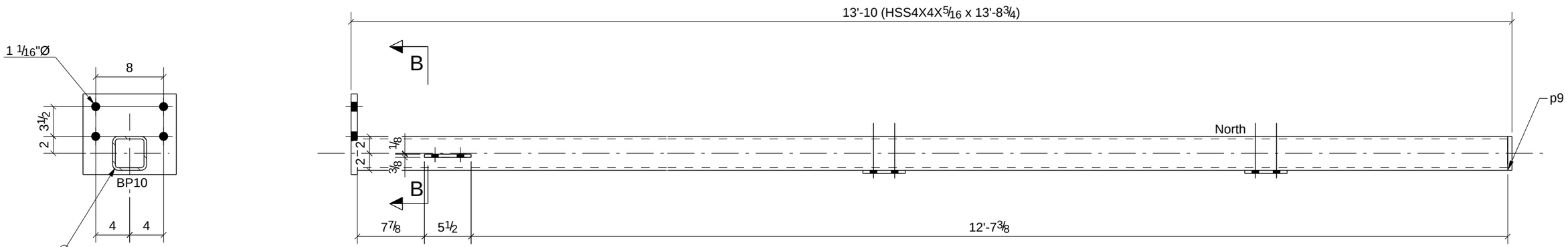

B - B

PROCESS CONTROL
PROCESS BY
FAB:
FIT AND WELD:
INSPECTION:
OTHER (IF NEEDED)
REFERENCE LATEST ERECTION DRAWINGS FOR MATERIAL & FABRICATION INFORMATION

ONE - COLUMN - C28

BILL OF MATERIAL

Qty Ea.	Qty Tot	Piece Mark	Description	Length	Weight Total	Remarks	Adv Mill #	Steel Grade
	1	C28	COLUMN					
	1		HSS4X4X5/16	13'-8 3/4"	192	SQ-2		A500-GR.B
	1	BP10	BAR3/4"X9 1/2"	0'-11"	22			A36
	1	p9	BAR1/2"X4"	0'-4"	2			A36
	2	p18	BAR3/8"X5"	0'-10"	11			A992
	1	p40	BAR3/8"X5 1/2"	0'-10 1/2"	6			A992

STEEL ASTM	A992	UNO	
ELECTRODES	E70XX L.H.	UNO	
WELDS	1/4" FILLET	UNO	
OPEN HOLES	13/16" UNO	FINISH	PER SPECS
BOLTS	3/4" A325N	UNO	
PAINT	1 S/C STD PRIMER U.N.O.	UNO	

PROJECT NAME
OLDE ORCHARD ELEMENTARY SCHOOL

LOCATION
800 McNAUGHTEN RD. COLUMBUS, OHIO 43213

CONTRACTOR
THOMAS AND MARKER CONSTRUCTION

ARCHITECT
BRAUN & STEIDL

DATE	NO.	DESCRIPTION	BY
5/28/11	B	For Checking	TMc
5/16/11	A	For Approval	TMc

North Central Fabrication, Ltd.
NORTH CENTRAL FABRICATION
Mansfield, OH 44906
419-529-2744 FAX 419-529-5387 http://www.northcentralfab
AISC CERTIFIED FABRICATOR

DESCRIPTION	DATE	DATE	JOB No.
COLUMN	05/15/2011		70234
	DRAWN BY TMc	CHECKED BY TAN	DRG No. C28

GRID LOCATION	BOTTOM ELEVATION
H/5	113'-5"1/2

PHASE				
1	2	3	4	5
1	0	0	0	0

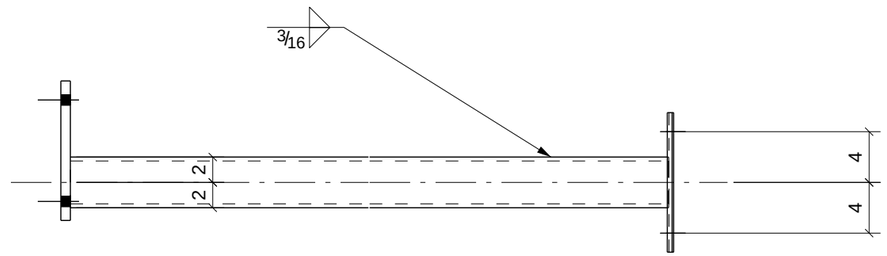

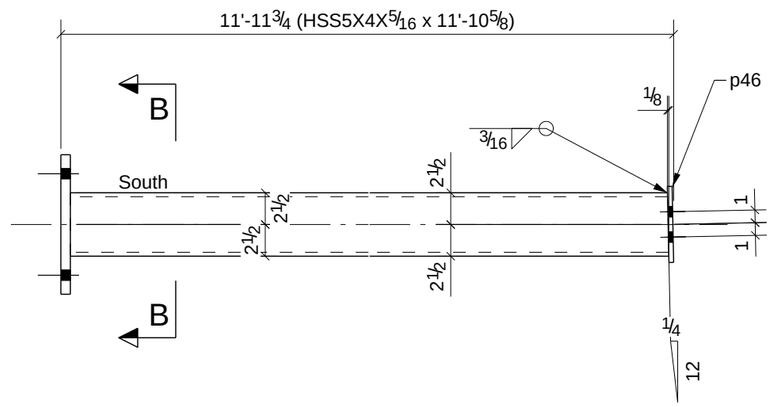

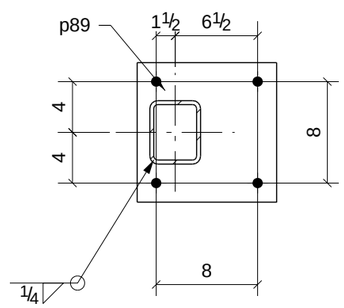

B - B

PROCESS CONTROL
PROCESS BY
FAB: _____
FIT AND WELD: _____
INSPECTION: _____
OTHER (IF NEEDED) _____
_____ : _____
_____ : _____
_____ : _____
_____ : _____
REFERENCE LATEST ERECTION DRAWINGS FOR MATERIAL & FABRICATION INFORMATION

ONE - COLUMN - C29

BILL OF MATERIAL

Qty Ea.	Qty Tot	Piece Mark	Description	Length	Weight Total	Remarks	Adv Mill #	Steel Grade
	1	C29	COLUMN					
	1		HSS5X4X5/16	11'-10 5/8"	189	SQ-1/BEV-1		A500-GR.B
	1	p46	BAR3/8"X6"	0'-11"	7			A992
	1	p89	BAR3/4"X11"	0'-11"	26			A36

STEEL ASTM	A992	UNO
ELECTRODES	E70XX L.H.	UNO
WELDS	1/4" FILLET	UNO
OPEN HOLES	13/16" UNO	FINISH PER SPECS
BOLTS	3/4" A325N	UNO
PAINT	1 S/C STD PRIMER U.N.O.	UNO

PROJECT NAME
OLDE ORCHARD ELEMENTARY SCHOOL

LOCATION
800 McNAUGHTEN RD. COLUMBUS, OHIO 43213

CONTRACTOR
THOMAS AND MARKER CONSTRUCTION

ARCHITECT
BRAUN & STEIDL

DATE	NO.	DESCRIPTION	BY
5/28/11	B	For Checking	TMc
5/16/11	A	For Approval	TMc

North Central Fabrication, Ltd.

NORTH CENTRAL FABRICATION
Mansfield, OH 44906
419-529-2744 FAX 419-529-5387 http://www.northcentralfab

AISC CERTIFIED FABRICATOR

DESCRIPTION	DATE	DATE	JOB No.
COLUMN	05/15/2011		70234
	DRAWN BY TMc	CHECKED BY TAN	DRG No. C29

GRID LOCATION	BOTTOM ELEVATION
H.2-J.1/	113'-5"1/2

PHASE				
1	2	3	4	5
1	0	0	0	0

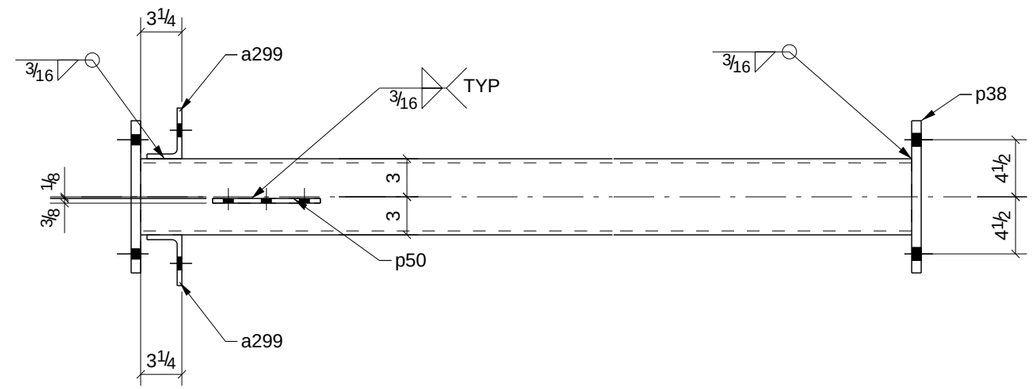

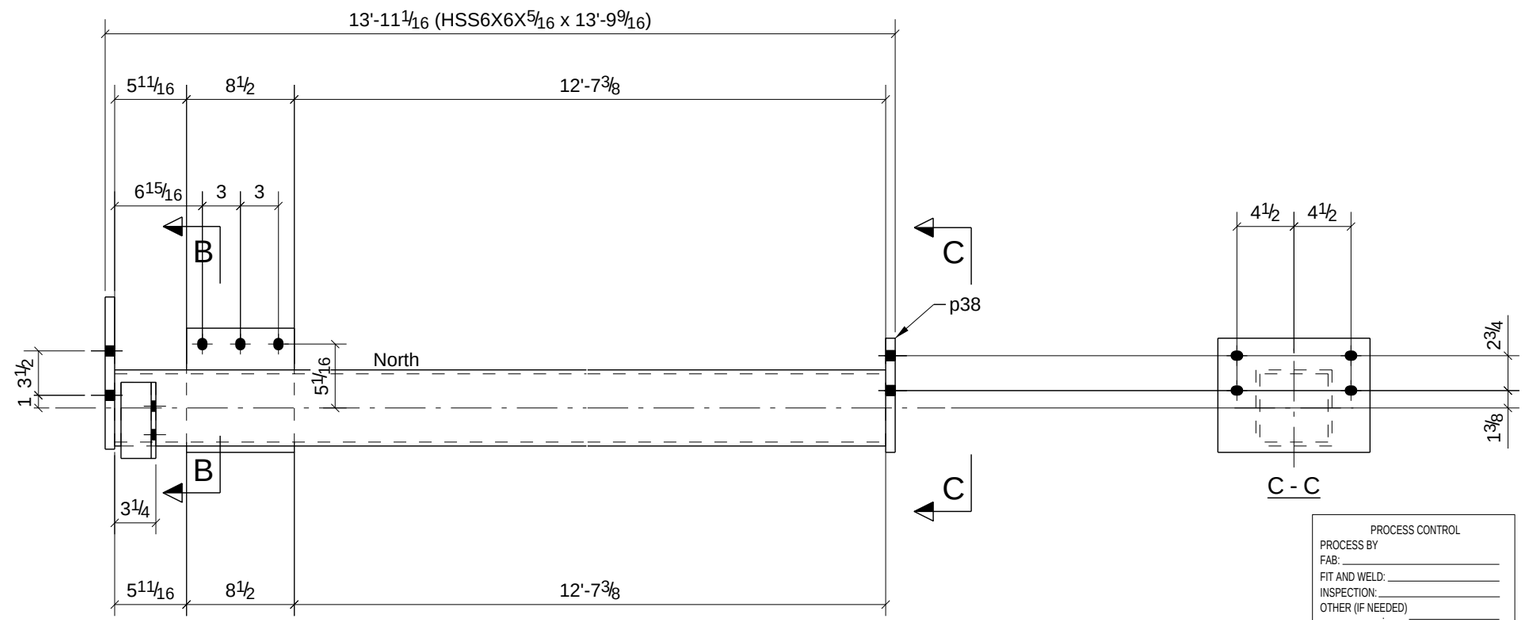

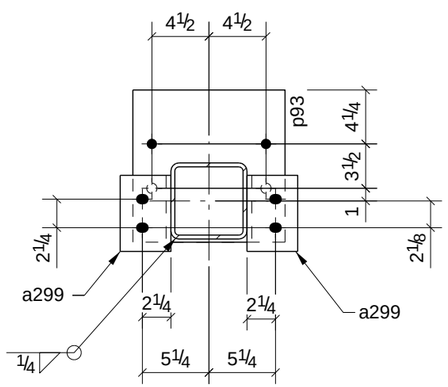

PROCESS CONTROL
PROCESS BY
FAB: _____
FIT AND WELD: _____
INSPECTION: _____
OTHER (IF NEEDED) _____
_____ : _____
_____ : _____
_____ : _____
_____ : _____
REFERENCE LATEST ERECTION DRAWINGS FOR MATERIAL & FABRICATION INFORMATION

ONE - COLUMN - C30

BILL OF MATERIAL

Qty Ea.	Qty Tot	Piece Mark	Description	Length	Weight Total	Remarks	Adv Mill #	Steel Grade
	1	C30	COLUMN					
	1		HSS6X6X5/16	13'-9 9/16"	302	SQ-2		A500-GR.B
	2	a299	L4X4X3/8	0'-6"	10			A36
	1	p38	BAR3/4"X9"	1'-0"	23			A36
	1	p50	BAR3/8"X8 1/2"	0'-9 13/16"	9			A992
	1	p93	BAR3/4"X12"	1'-0"	31			A36

STEEL ASTM	A992	UNO	
ELECTRODES	E70XX L.H.	UNO	
WELDS	1/4" FILLET	UNO	
OPEN HOLES	13/16"	UNO	FINISH PER SPECS
BOLTS	3/4" A325N	UNO	
PAINT	1 S/C STD PRIMER U.N.O.	UNO	

PROJECT NAME
OLDE ORCHARD ELEMENTARY SCHOOL
LOCATION
800 McNAUGHTEN RD. COLUMBUS, OHIO 43213
CONTRACTOR
THOMAS AND MARKER CONSTRUCTION
ARCHITECT
BRAUN & STEIDL

DATE	NO.	DESCRIPTION	BY
5/28/11	B	For Checking	TMc
5/16/11	A	For Approval	TMc

North Central Fabrication, Ltd.

NORTH CENTRAL FABRICATION
Mansfield, OH 44906
419-529-2744 FAX 419-529-5387 http://www.northcentralfab

AISC CERTIFIED FABRICATOR

DESCRIPTION	DATE	DATE	JOB No.
COLUMN	05/15/2011		70234
	DRAWN BY TMc	CHECKED BY TAN	DRG No. C30

GRID LOCATION	BOTTOM ELEVATION
H.2-J.1/	113'-5"1/2

PHASE				
1	2	3	4	5
1	0	0	0	0

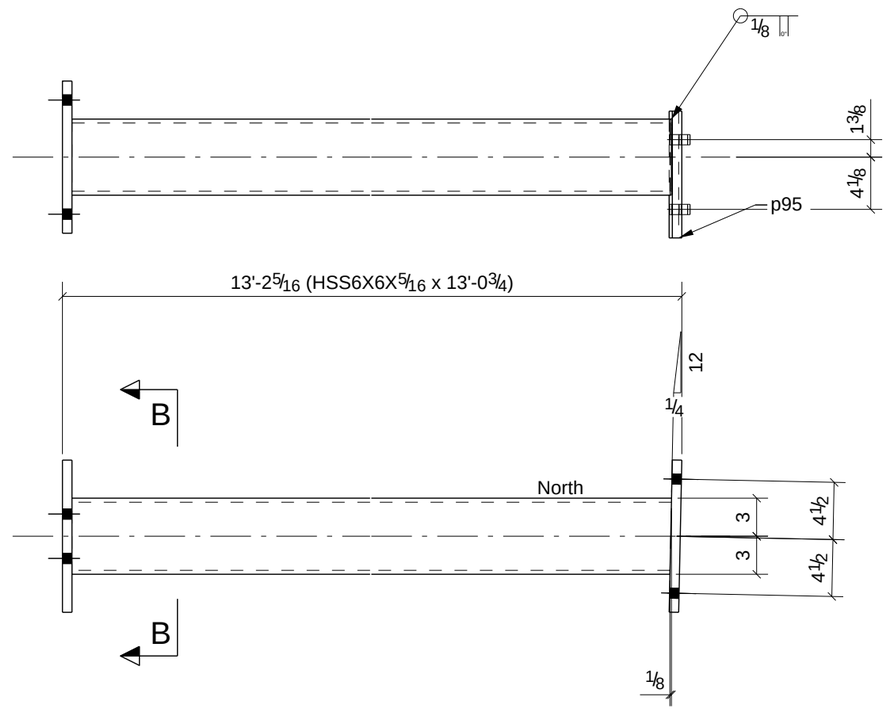

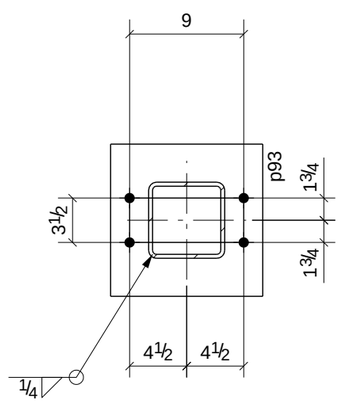

B - B

ONE - COLUMN - C33

PROCESS CONTROL
PROCESS BY
FAB: _____
FIT AND WELD: _____
INSPECTION: _____
OTHER (IF NEEDED)
_____ : _____
_____ : _____
_____ : _____
_____ : _____
_____ : _____
REFERENCE LATEST ERECTION DRAWINGS FOR MATERIAL & FABRICATION INFORMATION

BILL OF MATERIAL

Qty Ea.	Qty Tot	Piece Mark	Description	Length	Weight Total	Remarks	Adv Mill #	Steel Grade
	1	C33	COLUMN					
	1		HSS6X6X5/16	13'-0 3/4"	286	SQ-1/BEV-1		A500-GR.B
	1	p93	BAR3/4"X12"	1'-0"	31			A36
	1	p95	BAR3/4"X10"	1'-0"	26			A36

STEEL ASTM	A992	UNO
ELECTRODES	E70XX L.H.	UNO
WELDS	1/4" FILLET	UNO
OPEN HOLES	13/16" UNO	FINISH PER SPECS
BOLTS	3/4" A325N	UNO
PAINT	1 S/C STD PRIMER U.N.O.	UNO

PROJECT NAME
OLDE ORCHARD ELEMENTARY SCHOOL

LOCATION
800 McNAUGHTEN RD. COLUMBUS, OHIO 43213

CONTRACTOR
THOMAS AND MARKER CONSTRUCTION

ARCHITECT
BRAUN & STEIDL

DATE	NO.	DESCRIPTION	BY
5/28/11	B	For Checking	TMc
5/16/11	A	For Approval	TMc

North Central Fabrication, Ltd.

NORTH CENTRAL FABRICATION
Mansfield, OH 44906
419-529-2744 FAX 419-529-5387 http://www.northcentralfab

AISC CERTIFIED FABRICATOR

DESCRIPTION	DATE	DATE	JOB No.
COLUMN	05/15/2011		70234
	DRAWN BY TMc	CHECKED BY TAN	DRG No. C33

GRID LOCATION	BOTTOM ELEVATION
F.9/1>	114'-0"

PHASE				
1	2	3	4	5
1	0	0	0	0

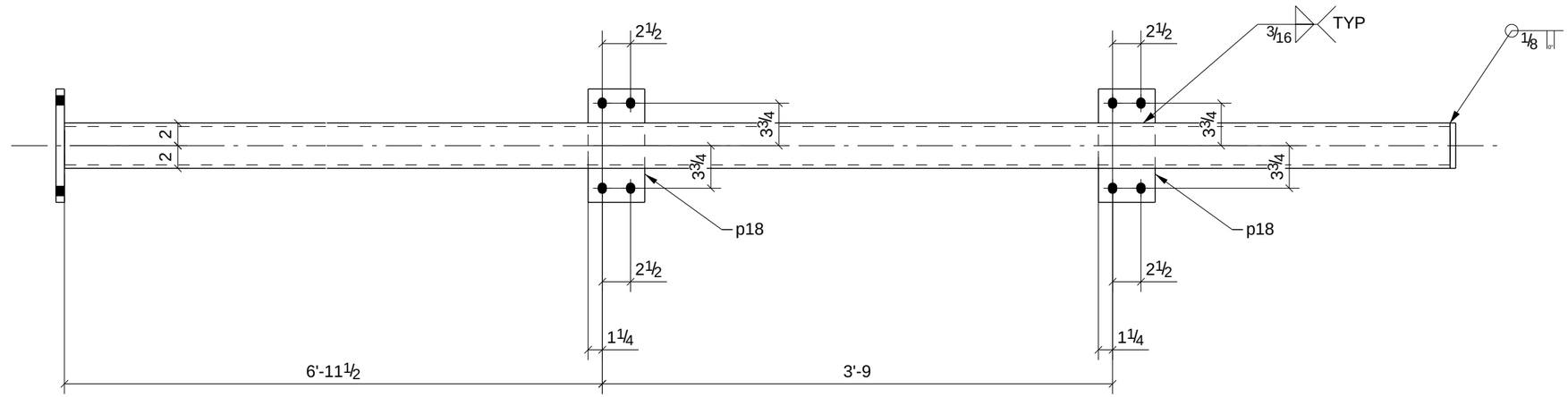

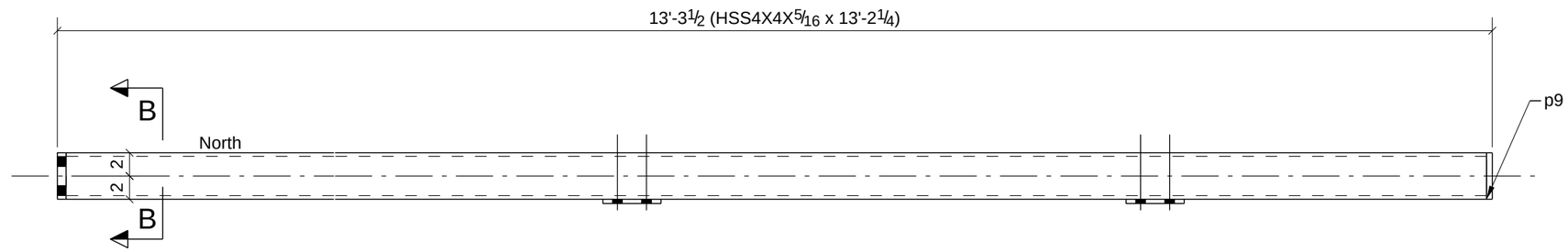

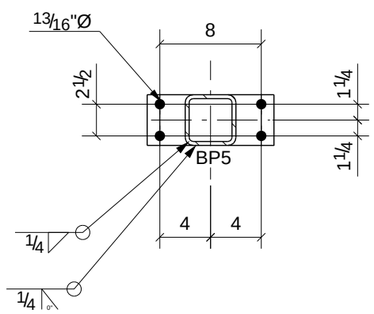

B - B

PROCESS CONTROL
PROCESS BY
FAB: _____
FIT AND WELD: _____
INSPECTION: _____
OTHER (IF NEEDED)
_____ : _____
_____ : _____
_____ : _____
_____ : _____
REFERENCE LATEST ERECTION DRAWINGS FOR MATERIAL & FABRICATION INFORMATION

ONE - COLUMN - C47

BILL OF MATERIAL

Qty Ea.	Qty Tot	Piece Mark	Description	Length	Weight Total	Remarks	Adv Mill #	Steel Grade
	1	C47	COLUMN					
	1		HSS4X4X5/16	13'-2 1/4"	184	SQ-2		A500-GR.B
	1	BP5	BAR3/4"X4"	0'-10"	9			A36
	1	p9	BAR1/2"X4"	0'-4"	2			A36
	2	p18	BAR3/8"X5"	0'-10"	11			A992

STEEL ASTM	A992	UNO
ELECTRODES	E70XX L.H.	UNO
WELDS	1/4" FILLET	UNO
OPEN HOLES	13/16" UNO	FINISH PER SPECS
BOLTS	3/4" A325N	UNO
PAINT	1 S/C STD PRIMER U.N.O.	UNO

PROJECT NAME: OLDE ORCHARD ELEMENTARY SCHOOL
LOCATION: 800 McNAUGHTEN RD. COLUMBUS, OHIO 43213
CONTRACTOR: THOMAS AND MARKER CONSTRUCTION
ARCHITECT: BRAUN & STEIDL

DATE	NO.	DESCRIPTION	BY
5/28/11	B	For Checking	TMc
5/16/11	A	For Approval	TMc

North Central Fabrication, Ltd.

NORTH CENTRAL FABRICATION
Mansfield, OH 44906
419-529-2744 FAX 419-529-5387 http://www.northcentralfab

AISC CERTIFIED FABRICATOR

DESCRIPTION	DATE	DATE	JOB No.
COLUMN	05/15/2011		70234
	DRAWN BY TMc	CHECKED BY TAN	DRG No. C47

GRID LOCATION	BOTTOM ELEVATION
G.1/1>	114'-0"

PHASE				
1	2	3	4	5
1	0	0	0	0

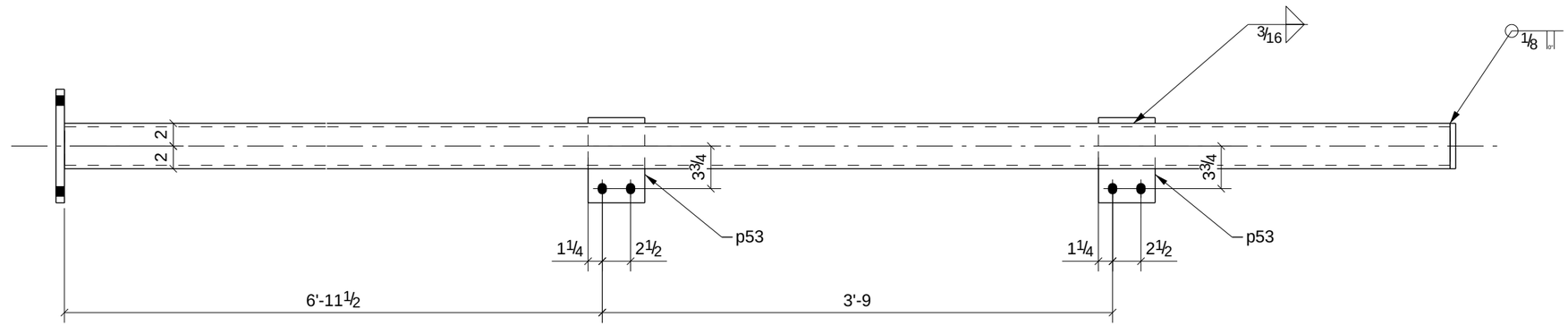

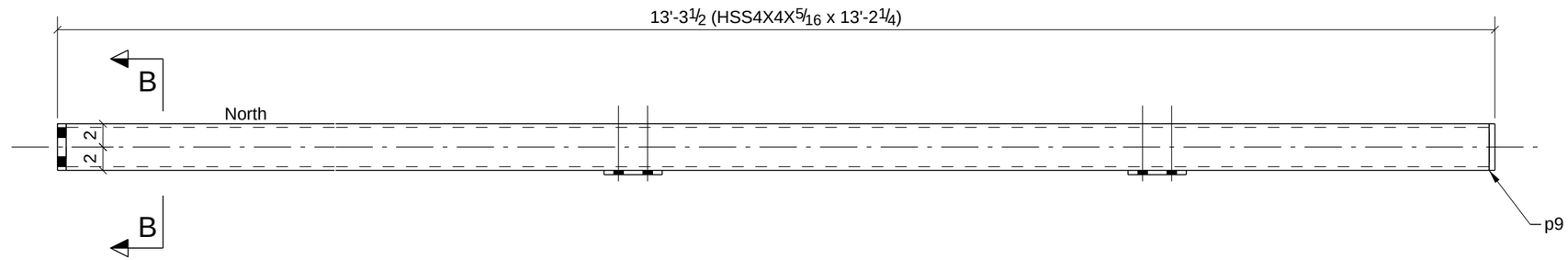

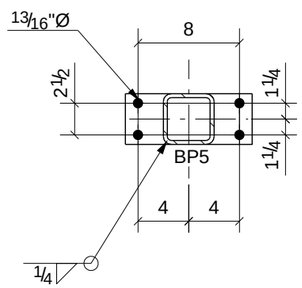

B - B

PROCESS CONTROL
PROCESS BY
FAB: _____
FIT AND WELD: _____
INSPECTION: _____
OTHER (IF NEEDED)
_____ : _____
_____ : _____
_____ : _____
_____ : _____
REFERENCE LATEST ERECTION DRAWINGS FOR MATERIAL & FABRICATION INFORMATION

ONE - COLUMN - C48

BILL OF MATERIAL

Qty Ea.	Qty Tot	Piece Mark	Description	Length	Weight Total	Remarks	Adv Mill #	Steel Grade
	1	C48	COLUMN					
	1		HSS4X4X5/16	13'-2 1/4"	184	SQ-2		A500-GR.B
	1	BP5	BAR3/4"X4"	0'-10"	9			A36
	1	p9	BAR1/2"X4"	0'-4"	2			A36
	2	p53	BAR3/8"X5"	0'-7 1/2"	8			A992

STEEL ASTM	A992	UNO
ELECTRODES	E70XX L.H.	UNO
WELDS	1/4" FILLET	UNO
OPEN HOLES	13/16" UNO	FINISH PER SPECS
BOLTS	3/4" A325N	UNO
PAINT	1 S/C STD PRIMER U.N.O.	UNO

PROJECT NAME
OLDE ORCHARD ELEMENTARY SCHOOL
LOCATION
800 McNAUGHTEN RD. COLUMBUS, OHIO 43213
CONTRACTOR
THOMAS AND MARKER CONSTRUCTION
ARCHITECT
BRAUN & STEIDL

DATE	NO.	DESCRIPTION	BY
5/28/11	B	For Checking	TMc
5/16/11	A	For Approval	TMc

North Central Fabrication, Ltd.

NORTH CENTRAL FABRICATION
Mansfield, OH 44906
419-529-2744 FAX 419-529-5387 http://www.northcentralfab

AISC CERTIFIED FABRICATOR

DESCRIPTION	DATE	DATE	JOB No.
COLUMN	05/15/2011		70234
	DRAWN BY TMc	CHECKED BY TAN	DRG No. C48

GRID LOCATION	BOTTOM ELEVATION
H.2/1>	113'-5"1/2

PHASE				
1	2	3	4	5
1	0	0	0	0

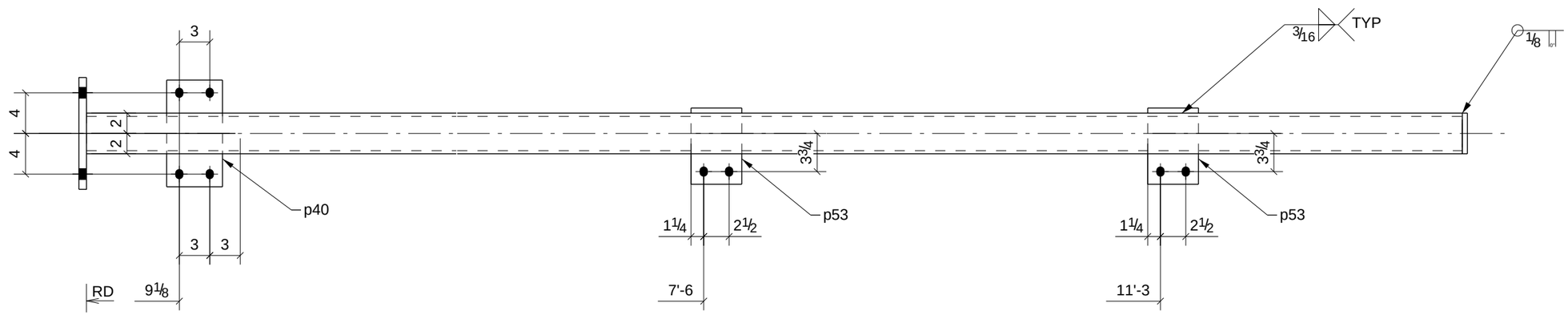

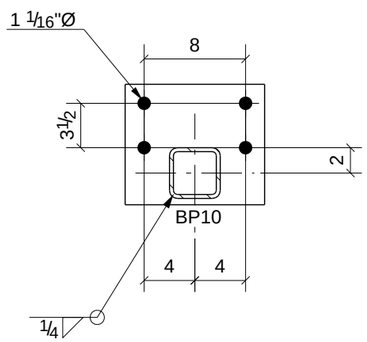

B - B

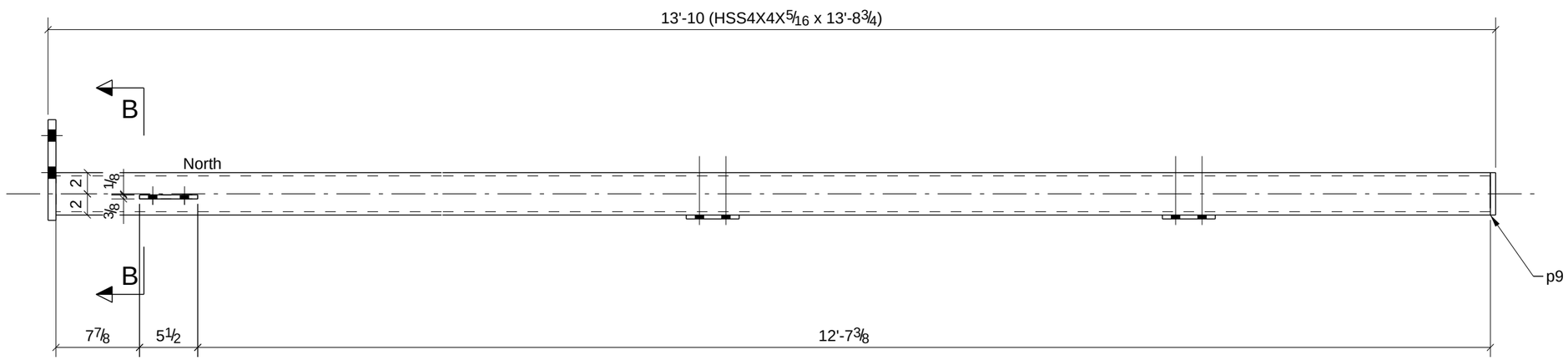

PROCESS CONTROL
PROCESS BY
FAB: _____
FIT AND WELD: _____
INSPECTION: _____
OTHER (IF NEEDED) _____
_____ : _____
_____ : _____
_____ : _____
_____ : _____
REFERENCE LATEST ERECTION DRAWINGS FOR MATERIAL & FABRICATION INFORMATION

ONE - COLUMN - C49

BILL OF MATERIAL

Qty Ea.	Qty Tot	Piece Mark	Description	Length	Weight Total	Remarks	Adv Mill #	Steel Grade
	1	C49	COLUMN					
	1		HSS4X4X5/16	13'-8 3/4"	192	SQ-2		A500-GR.B
	1	BP10	BAR3/4"X9 1/2"	0'-11"	22			A36
	1	p9	BAR1/2"X4"	0'-4"	2			A36
	1	p40	BAR3/8"X5 1/2"	0'-10 1/2"	6			A992
	2	p53	BAR3/8"X5"	0'-7 1/2"	8			A992

STEEL ASTM	A992	UNO
ELECTRODES	E70XX L.H.	UNO
WELDS	1/4" FILLET	UNO
OPEN HOLES	13/16" UNO	FINISH PER SPECS
BOLTS	3/4" A325N	UNO
PAINT	1 S/C STD PRIMER U.N.O.	UNO

PROJECT NAME
OLDE ORCHARD ELEMENTARY SCHOOL

LOCATION
800 McNAUGHTEN RD. COLUMBUS, OHIO 43213

CONTRACTOR
THOMAS AND MARKER CONSTRUCTION

ARCHITECT
BRAUN & STEIDL

DATE	NO.	DESCRIPTION	BY
5/28/11	B	For Checking	TMc
5/16/11	A	For Approval	TMc

North Central Fabrication, Ltd.
NORTH CENTRAL FABRICATION
Mansfield, OH 44906
419-529-2744 FAX 419-529-5387 http://www.northcentralfab
AISC CERTIFIED FABRICATOR

DESCRIPTION	DATE	DATE	JOB No.
COLUMN	05/15/2011		70234
	DRAWN BY TMc	CHECKED BY TAN	DRG No. C49

GRID LOCATION	BOTTOM ELEVATION
H.2-J.1/	113'-5"1/2

PHASE				
1	2	3	4	5
1	0	0	0	0

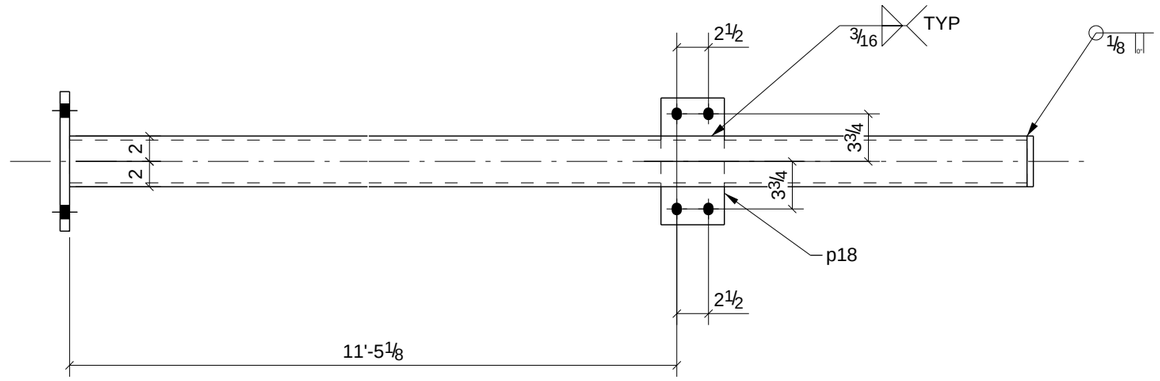

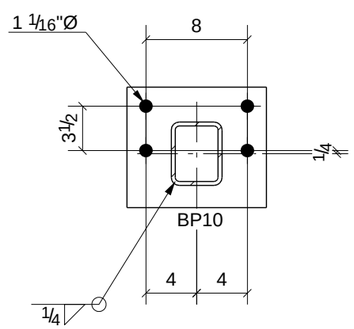

B - B

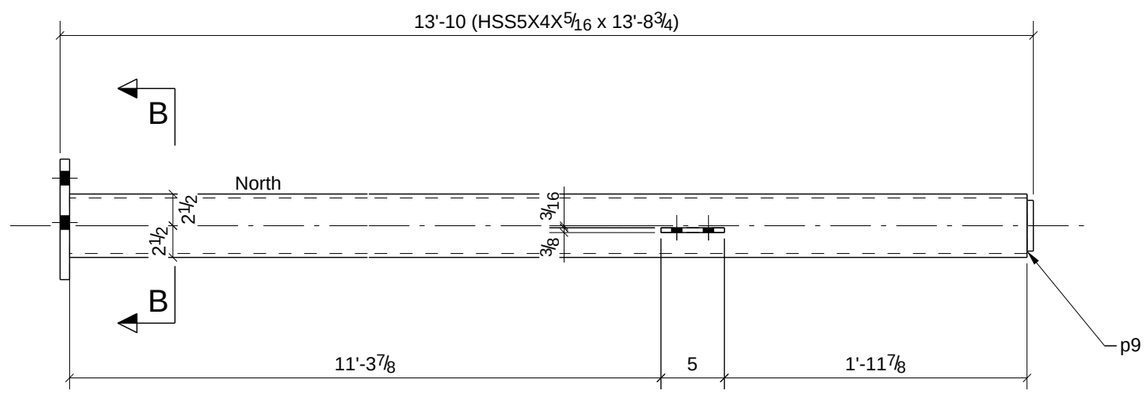

PROCESS CONTROL
PROCESS BY
FAB: _____
FIT AND WELD: _____
INSPECTION: _____
OTHER (IF NEEDED)
_____ : _____
_____ : _____
_____ : _____
_____ : _____
_____ : _____
REFERENCE LATEST ERECTION DRAWINGS FOR MATERIAL & FABRICATION INFORMATION

ONE - COLUMN - C50

BILL OF MATERIAL

Qty Ea.	Qty Tot	Piece Mark	Description	Length	Weight Total	Remarks	Adv Mill #	Steel Grade
	1	C50	COLUMN					
	1		HSS5X4X5/16	13'-8 3/4"	219	SQ-2		A500-GR.B
	1	BP10	BAR3/4"X9 1/2"	0'-11"	22			A36
	1	p9	BAR1/2"X4"	0'-4"	2			A36
	1	p18	BAR3/8"X5"	0'-10"	5			A992

STEEL ASTM	A992	UNO
ELECTRODES	E70XX L.H.	UNO
WELDS	1/4" FILLET	UNO
OPEN HOLES	13/16" UNO	FINISH PER SPECS
BOLTS	3/4" A325N	UNO
PAINT	1 S/C STD PRIMER U.N.O.	UNO

PROJECT NAME
OLDE ORCHARD ELEMENTARY SCHOOL
LOCATION
800 McNAUGHTEN RD. COLUMBUS, OHIO 43213
CONTRACTOR
THOMAS AND MARKER CONSTRUCTION
ARCHITECT
BRAUN & STEIDL

DATE	NO.	DESCRIPTION	BY
5/28/11	B	For Checking	TMc
5/16/11	A	For Approval	TMc

North Central Fabrication, Ltd.
NORTH CENTRAL FABRICATION
Mansfield, OH 44906
419-529-2744 FAX 419-529-5387 http://www.northcentralfab
AISC CERTIFIED FABRICATOR

DESCRIPTION	DATE	DATE	JOB No.
COLUMN	05/15/2011		70234
	DRAWN BY TMc	CHECKED BY TAN	DRG No. C50

GRID LOCATION	BOTTOM ELEVATION
H.2-J.1/	-2'-0"

PHASE				
1	2	3	4	5
1	0	0	0	0

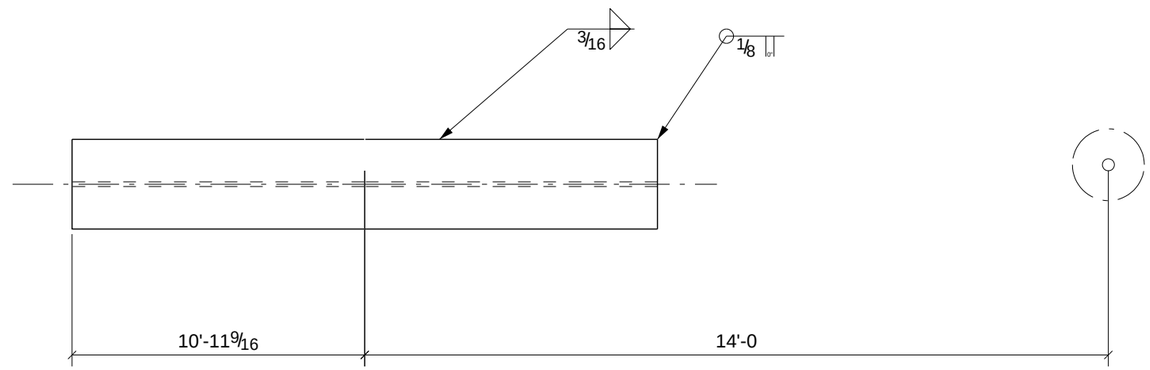

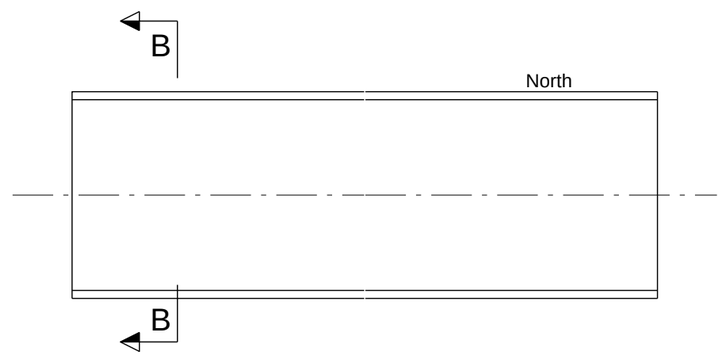

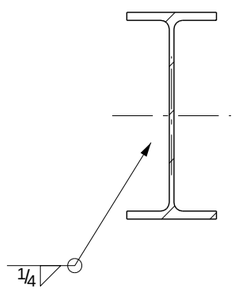

B - B

ONE - COLUMN - C51

W	16 5/16" x 3/8"
F	7 1/16" x 5/8"

PROCESS CONTROL
PROCESS BY
FAB: _____
FIT AND WELD: _____
INSPECTION: _____
OTHER (IF NEEDED)
_____ : _____
_____ : _____
_____ : _____
_____ : _____
_____ : _____
REFERENCE LATEST ERECTION DRAWINGS FOR MATERIAL & FABRICATION INFORMATION

DATE	NO.	DESCRIPTION	BY
5/28/11	B	For Checking	TMc
5/16/11	A	For Approval	TMc

BILL OF MATERIAL

Qty Ea.	Qty Tot	Piece Mark	Description	Length	Weight Total	Remarks	Adv Mill #	Steel Grade
	1	C51	COLUMN					
	1		W16X50	22'-0"	1101	SQ-2		A992

STEEL ASTM	A992	UNO
ELECTRODES	E70XX L.H.	UNO
WELDS	1/4" FILLET	UNO
OPEN HOLES	13/16" UNO	FINISH PER SPECS
BOLTS	3/4" A325N	UNO
PAINT	1 S/C STD PRIMER U.N.O.	UNO

PROJECT NAME
OLDE ORCHARD ELEMENTARY SCHOOL
LOCATION
800 McNAUGHTEN RD. COLUMBUS, OHIO 43213
CONTRACTOR
THOMAS AND MARKER CONSTRUCTION
ARCHITECT
BRAUN & STEIDL

North Central Fabrication, Ltd.
NORTH CENTRAL FABRICATION
Mansfield, OH 44906
419-529-2744 FAX 419-529-5387 http://www.northcentralfab
AISC CERTIFIED FABRICATOR

DESCRIPTION	DATE	DATE	JOB No.
COLUMN	05/15/2011		70234
	DRAWN BY TMc	CHECKED BY TAN	DRG No. C51

GRID LOCATION	BOTTOM ELEVATION
H.2-J.1/	99'-5"

PHASE				
1	2	3	4	5
1	0	0	0	0

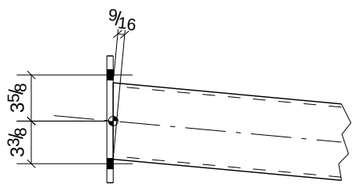

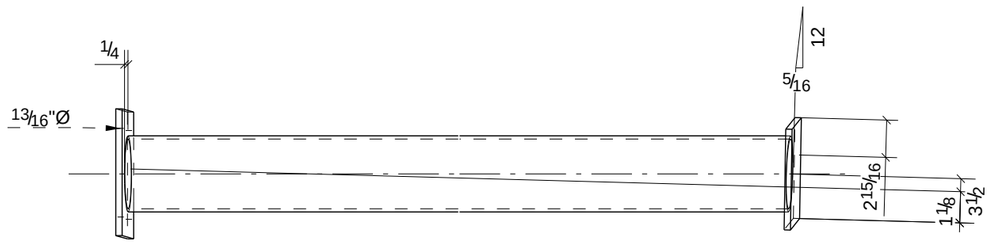

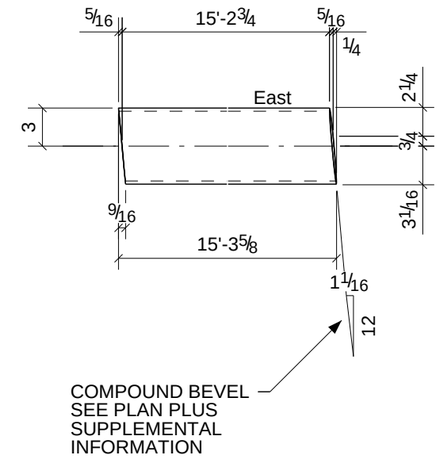

C - C

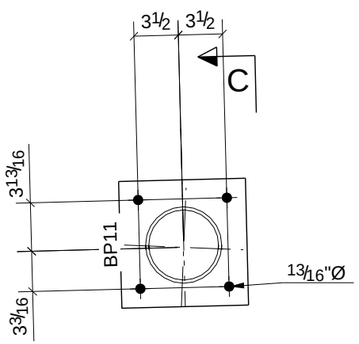

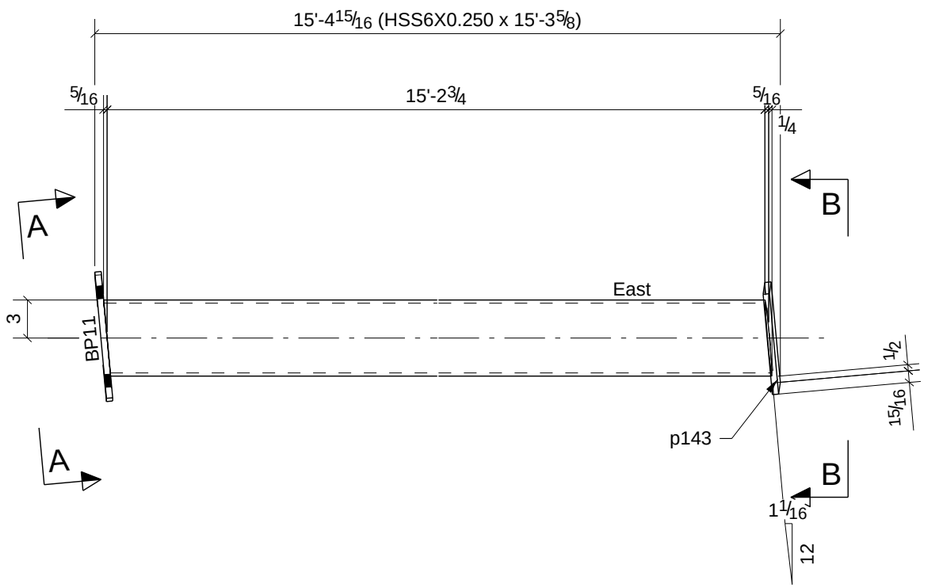

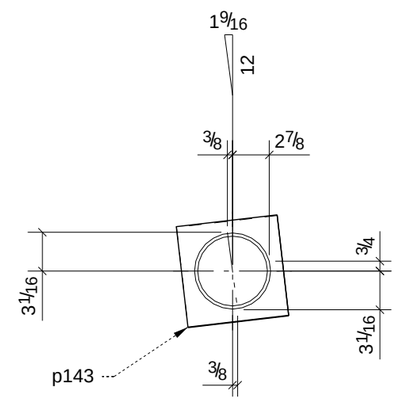

B - B

A - A

ONE - COLUMN - C52

PROCESS CONTROL
PROCESS BY
FAB: _____
FIT AND WELD: _____
INSPECTION: _____
OTHER (IF NEEDED) _____
_____ : _____
_____ : _____
_____ : _____
_____ : _____
REFERENCE LATEST ERECTION DRAWINGS FOR MATERIAL & FABRICATION INFORMATION

BILL OF MATERIAL

Qty Ea.	Qty Tot	Piece Mark	Description	Length	Weight Total	Remarks	Adv Mill #	Steel Grade
	1	C52	COLUMN					
	1		HSS6X0.250	15'-3 5/8"	220	BEV-2 GALVANIZED		A500-GR.B
	1	BP11	BAR1/2"X10"	0'-10"	14	GALVANIZED		A992
	1	p143	BAR1/2"X8"	0'-8"	9	GALVANIZED		A36

STEEL ASTM	A992		UNO
ELECTRODES	E70XX L.H.		UNO
WELDS	1/4" FILLET		UNO
OPEN HOLES	13/16"	UNO	FINISH PER SPECS
BOLTS	3/4" A325N		UNO
PAINT	1 S/C STD PRIMER U.N.O.		UNO

PROJECT NAME
OLDE ORCHARD ELEMENTARY SCHOOL

LOCATION
800 McNAUGHTEN RD. COLUMBUS, OHIO 43213

CONTRACTOR
THOMAS AND MARKER CONSTRUCTION

ARCHITECT
BRAUN & STEIDL

DATE	NO.	DESCRIPTION	BY
5/28/11	B	For Checking	TMc
5/21/11	A	For Approval	TMc

North Central Fabrication, Ltd.

NORTH CENTRAL FABRICATION
Mansfield, OH 44906
419-529-2744 FAX 419-529-5387 http://www.northcentralfab

AISC CERTIFIED FABRICATOR

DESCRIPTION	DATE	DATE	JOB No.
COLUMN	05/20/2011		70234
	DRAWN BY	CHECKED BY	DRG No. C52

PHASE				
1	2	3	4	5
600	0	0	0	0

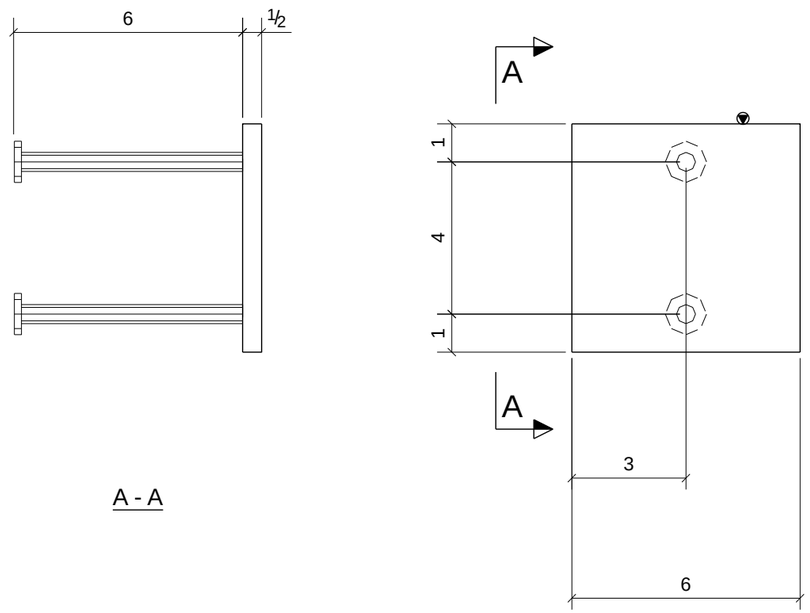

600 - JOIST BEARING PLATES - BP1

PROCESS CONTROL
PROCESS BY
FAB: _____
FIT AND WELD: _____
INSPECTION: _____
OTHER (IF NEEDED) _____
_____ : _____
_____ : _____
_____ : _____
_____ : _____
_____ : _____
REFERENCE LATEST ERECTION DRAWINGS FOR MATERIAL & FABRICATION INFORMATION

DATE	NO.	DESCRIPTION	BY
5/28/11	B	For Checking	TMc
5/16/11	A	For Approval	TMc

BILL OF MATERIAL

Qty Ea.	Qty Tot	Piece Mark	Description	Length	Weight Total	Remarks	Adv Mill #	Steel Grade
	600	BP1	JOIST BEARING PLATES					
	600		BAR1/2"X6"	0'-6"	3063	SQ-2		A36
	1200		STUD 1/2" DIA	0'-6"	468			

STEEL ASTM	A992	UNO
ELECTRODES	E70XX L.H.	UNO
WELDS	1/4" FILLET	UNO
OPEN HOLES	13/16" UNO	FINISH PER SPECS
BOLTS	3/4" A325N	UNO
PAINT	1 S/C STD PRIMER U.N.O.	UNO

PROJECT NAME
OLDE ORCHARD ELEMENTARY SCHOOL
LOCATION
800 McNAUGHTEN RD. COLUMBUS, OHIO 43213
CONTRACTOR
THOMAS AND MARKER CONSTRUCTION
ARCHITECT
BRAUN & STEIDL

North Central Fabrication, Ltd.
NORTH CENTRAL FABRICATION
Mansfield, OH 44906
419-529-2744 FAX 419-529-5387 http://www.northcentralfab
AISC CERTIFIED FABRICATOR

DESCRIPTION	DATE	DATE	JOB No.
EMBED PLATE	05/09/2011		70234
	DRAWN BY TMc	CHECKED BY TAN	DRG No. BP1

PHASE				
1	2	3	4	5
39	0	0	0	0

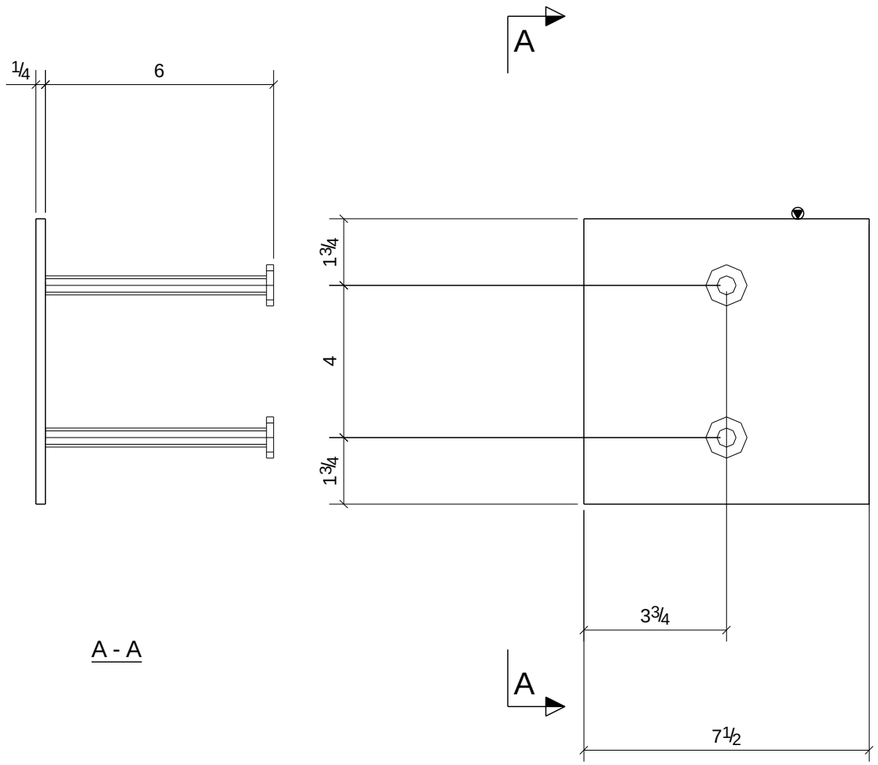

A - A

39 - BEAM BEARING PLATES - BP2

PROCESS CONTROL
PROCESS BY
FAB: _____
FIT AND WELD: _____
INSPECTION: _____
OTHER (IF NEEDED) _____
_____ : _____
_____ : _____
_____ : _____
_____ : _____
_____ : _____
REFERENCE LATEST ERECTION DRAWINGS FOR MATERIAL & FABRICATION INFORMATION

DATE	NO.	DESCRIPTION	BY
5/28/11	B	For Checking	TMc
5/16/11	A	For Approval	TMc

BILL OF MATERIAL

Qty Ea.	Qty Tot	Piece Mark	Description	Length	Weight Total	Remarks	Adv Mill #	Steel Grade
	39	BP2	BEAM BEARING PLATES					
	39		BAR1/4"X7 1/2"	0'-7 1/2"	156	SQ-2		A36
	78		STUD 1/2" DIA	0'-6"	30			

STEEL ASTM	A992	UNO
ELECTRODES	E70XX L.H.	UNO
WELDS	1/4" FILLET	UNO
OPEN HOLES	13/16" UNO	FINISH PER SPECS
BOLTS	3/4" A325N	UNO
PAINT	1 S/C STD PRIMER U.N.O.	UNO

PROJECT NAME
OLDE ORCHARD ELEMENTARY SCHOOL
LOCATION
800 McNAUGHTEN RD. COLUMBUS, OHIO 43213
CONTRACTOR
THOMAS AND MARKER CONSTRUCTION
ARCHITECT
BRAUN & STEIDL

North Central Fabrication, Ltd.
NORTH CENTRAL FABRICATION
Mansfield, OH 44906
419-529-2744 FAX 419-529-5387 http://www.northcentralfab
AISC CERTIFIED FABRICATOR

DESCRIPTION	DATE	DATE	JOB No.
EMBED PLATE	05/10/2011		70234
	DRAWN BY TMc	CHECKED BY TAN	DRG No. BP2

PHASE				
1	2	3	4	5
8	3	0	0	0

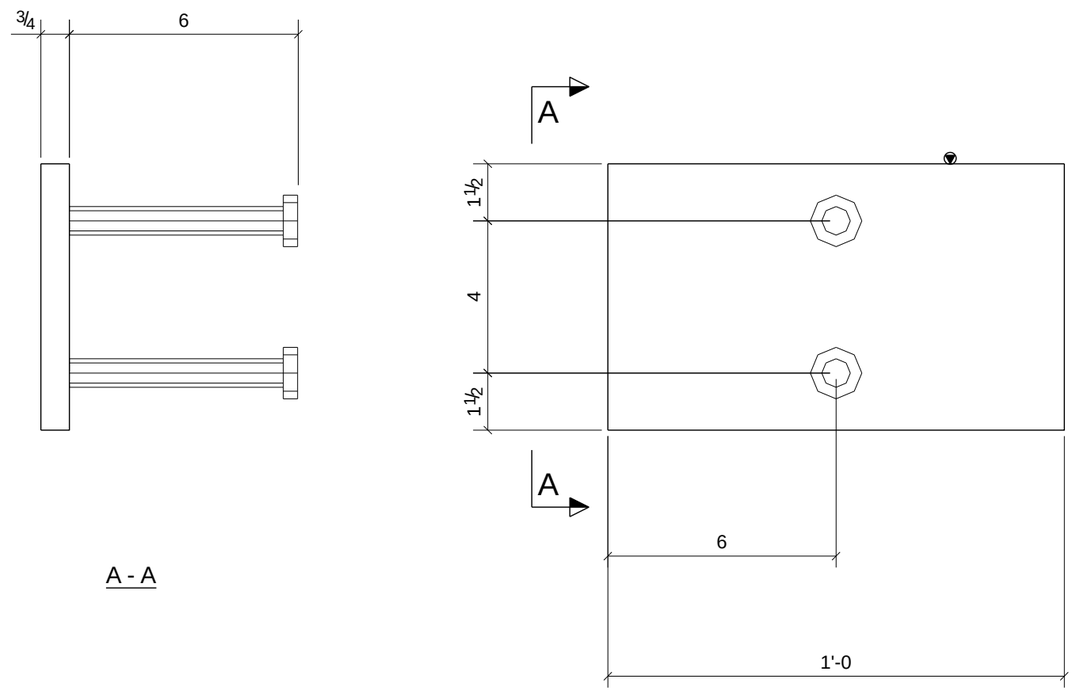

A - A

11 - BEAM BEARING PLATES - BP3

PROCESS CONTROL
PROCESS BY
FAB: _____
FIT AND WELD: _____
INSPECTION: _____
OTHER (IF NEEDED) _____
_____ : _____
_____ : _____
_____ : _____
_____ : _____
_____ : _____
REFERENCE LATEST ERECTION DRAWINGS FOR MATERIAL & FABRICATION INFORMATION

DATE	NO.	DESCRIPTION	BY
5/28/11	B	For Checking	TMc
5/16/11	A	For Approval	TMc

BILL OF MATERIAL

Qty Ea.	Qty Tot	Piece Mark	Description	Length	Weight Total	Remarks	Adv Mill #	Steel Grade
	11	BP3	BEAM BEARING PLATES					
	11		BAR3/4"X7"	1'-0"	197	SQ-2		A36
	22		STUD 3/4" DIA	0'-6"	19			

STEEL ASTM	A992	UNO
ELECTRODES	E70XX L.H.	UNO
WELDS	1/4" FILLET	UNO
OPEN HOLES	13/16" UNO	FINISH PER SPECS
BOLTS	3/4" A325N	UNO
PAINT	1 S/C STD PRIMER U.N.O.	UNO

PROJECT NAME
OLDE ORCHARD ELEMENTARY SCHOOL
LOCATION
800 McNAUGHTEN RD. COLUMBUS, OHIO 43213
CONTRACTOR
THOMAS AND MARKER CONSTRUCTION
ARCHITECT
BRAUN & STEIDL

North Central Fabrication, Ltd.
NORTH CENTRAL FABRICATION
Mansfield, OH 44906
419-529-2744 FAX 419-529-5387 http://www.northcentralfab
AISC CERTIFIED FABRICATOR

DESCRIPTION	DATE	DATE	JOB No.
EMBED PLATE	05/10/2011		70234
	DRAWN BY TMc	CHECKED BY TAN	DRG No. BP3

PHASE				
1	2	3	4	5
10	0	0	0	0

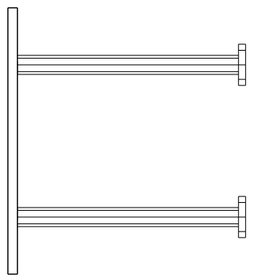

A - A

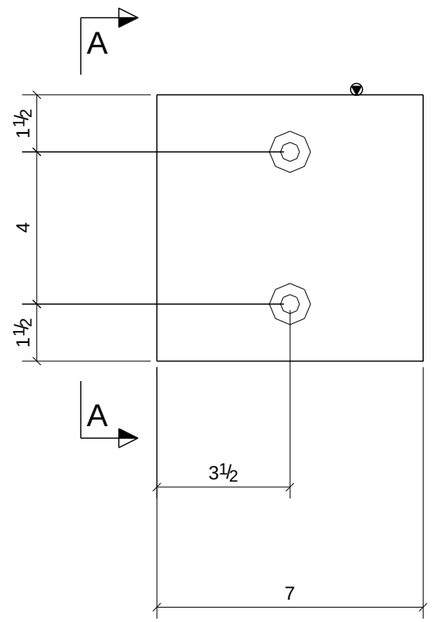

10 - BEAM BEARING PLATES - BP4

PROCESS CONTROL
PROCESS BY
FAB: _____
FIT AND WELD: _____
INSPECTION: _____
OTHER (IF NEEDED) _____
_____ : _____
_____ : _____
_____ : _____
_____ : _____
_____ : _____
REFERENCE LATEST ERECTION DRAWINGS FOR MATERIAL & FABRICATION INFORMATION

DATE	NO.	DESCRIPTION	BY
5/28/11	B	For Checking	TMc
5/16/11	A	For Approval	TMc

BILL OF MATERIAL

Qty Ea.	Qty Tot	Piece Mark	Description	Length	Weight Total	Remarks	Adv Mill #	Steel Grade
	10	BP4	BEAM BEARING PLATES					
	10		BAR1/4"X7"	0'-7"	35	SQ-2		A36
	20		STUD 1/2" DIA	0'-6"	8			

STEEL ASTM	A992	UNO
ELECTRODES	E70XX L.H.	UNO
WELDS	1/4" FILLET	UNO
OPEN HOLES	13/16" UNO	FINISH PER SPECS
BOLTS	3/4" A325N	UNO
PAINT	1 S/C STD PRIMER U.N.O.	UNO

PROJECT NAME
OLDE ORCHARD ELEMENTARY SCHOOL
LOCATION
800 McNAUGHTEN RD. COLUMBUS, OHIO 43213
CONTRACTOR
THOMAS AND MARKER CONSTRUCTION
ARCHITECT
BRAUN & STEIDL

North Central Fabrication, Ltd.
NORTH CENTRAL FABRICATION
Mansfield, OH 44906
419-529-2744 FAX 419-529-5387 http://www.northcentralfab
AISC CERTIFIED FABRICATOR

DESCRIPTION	DATE	DATE	JOB No.
EMBED PLATE	05/10/2011		70234
	DRAWN BY TMc	CHECKED BY TAN	DRG No. BP4

PHASE				
1	2	3	4	5
7	0	0	0	0

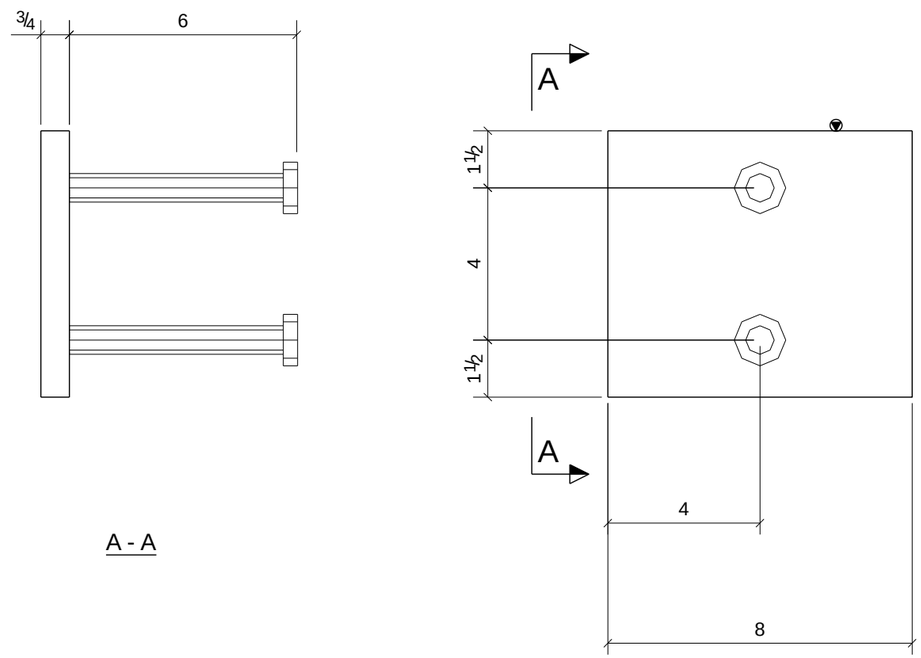

A - A

7 - BEAM BEARING PLATES - BP5

PROCESS CONTROL
PROCESS BY
FAB: _____
FIT AND WELD: _____
INSPECTION: _____
OTHER (IF NEEDED) _____
_____ : _____
_____ : _____
_____ : _____
_____ : _____
_____ : _____
REFERENCE LATEST ERECTION DRAWINGS FOR MATERIAL & FABRICATION INFORMATION

DATE	NO.	DESCRIPTION	BY
5/28/11	B	For Checking	TMc
5/16/11	A	For Approval	TMc

BILL OF MATERIAL

Qty Ea.	Qty Tot	Piece Mark	Description	Length	Weight Total	Remarks	Adv Mill #	Steel Grade
	7	BP5	BEAM BEARING PLATES					
	7		BAR3/4"X7"	0'-8"	83	SQ-2		A36
	14		STUD 3/4" DIA	0'-6"	12			

STEEL ASTM	A992	UNO
ELECTRODES	E70XX L.H.	UNO
WELDS	1/4" FILLET	UNO
OPEN HOLES	13/16" UNO	FINISH PER SPECS
BOLTS	3/4" A325N	UNO
PAINT	1 S/C STD PRIMER U.N.O.	UNO

PROJECT NAME
OLDE ORCHARD ELEMENTARY SCHOOL
LOCATION
800 McNAUGHTEN RD. COLUMBUS, OHIO 43213
CONTRACTOR
THOMAS AND MARKER CONSTRUCTION
ARCHITECT
BRAUN & STEIDL

North Central Fabrication, Ltd.
NORTH CENTRAL FABRICATION
Mansfield, OH 44906
419-529-2744 FAX 419-529-5387 http://www.northcentralfab
AISC CERTIFIED FABRICATOR

DESCRIPTION	DATE	DATE	JOB No.
EMBED PLATE	05/10/2011		70234
	DRAWN BY TMc	CHECKED BY TAN	DRG No. BP5

PHASE				
1	2	3	4	5
2	0	0	0	0

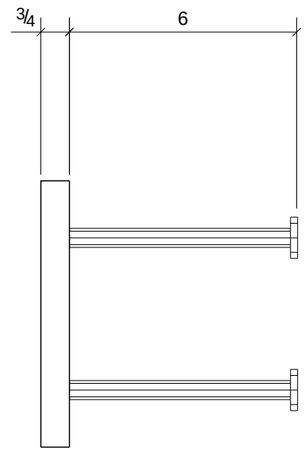

A - A

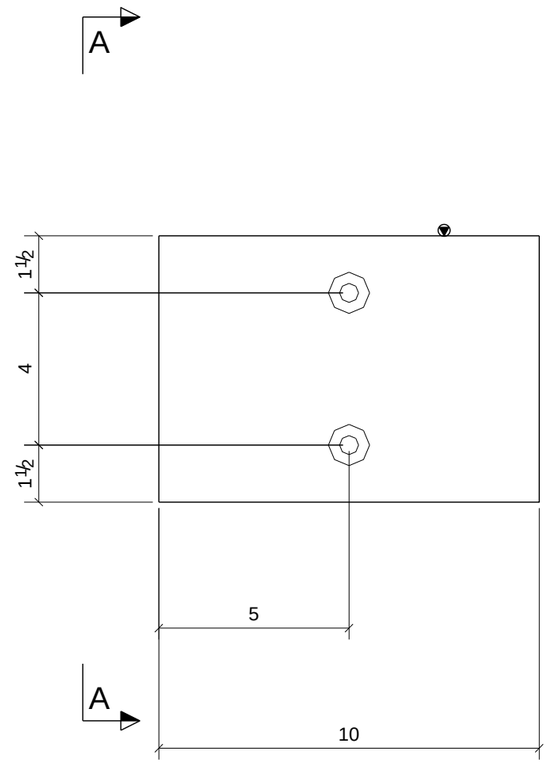

2 - BEAM BEARING PLATES - BP6

PROCESS CONTROL
PROCESS BY
FAB: _____
FIT AND WELD: _____
INSPECTION: _____
OTHER (IF NEEDED) _____
_____ : _____
_____ : _____
_____ : _____
_____ : _____
_____ : _____
REFERENCE LATEST ERECTION DRAWINGS FOR MATERIAL & FABRICATION INFORMATION

DATE	NO.	DESCRIPTION	BY
5/28/11	B	For Checking	TMc
5/16/11	A	For Approval	TMc

BILL OF MATERIAL

Qty Ea.	Qty Tot	Piece Mark	Description	Length	Weight Total	Remarks	Adv Mill #	Steel Grade
	2	BP6	BEAM BEARING PLATES					
	2		BAR3/4"X7"	0'-10"	30	SQ-2		A36
	4		STUD 1/2" DIA	0'-6"	2			

STEEL ASTM	A992	UNO
ELECTRODES	E70XX L.H.	UNO
WELDS	1/4" FILLET	UNO
OPEN HOLES	13/16" UNO	FINISH PER SPECS
BOLTS	3/4" A325N	UNO
PAINT	1 S/C STD PRIMER U.N.O.	UNO

PROJECT NAME
OLDE ORCHARD ELEMENTARY SCHOOL
LOCATION
800 McNAUGHTEN RD. COLUMBUS, OHIO 43213
CONTRACTOR
THOMAS AND MARKER CONSTRUCTION
ARCHITECT
BRAUN & STEIDL

North Central Fabrication, Ltd.
NORTH CENTRAL FABRICATION
Mansfield, OH 44906
419-529-2744 FAX 419-529-5387 http://www.northcentralfab
AISC CERTIFIED FABRICATOR

DESCRIPTION	DATE	DATE	JOB No.
EMBED PLATE	05/10/2011		70234
	DRAWN BY TMc	CHECKED BY TAN	DRG No. BP6

PHASE				
1	2	3	4	5
2	0	0	0	0

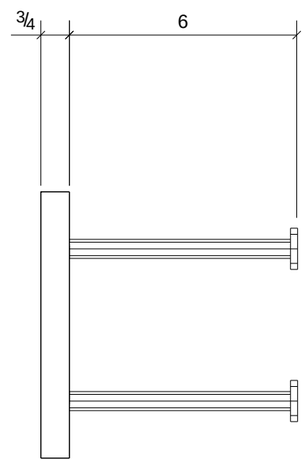

A - A

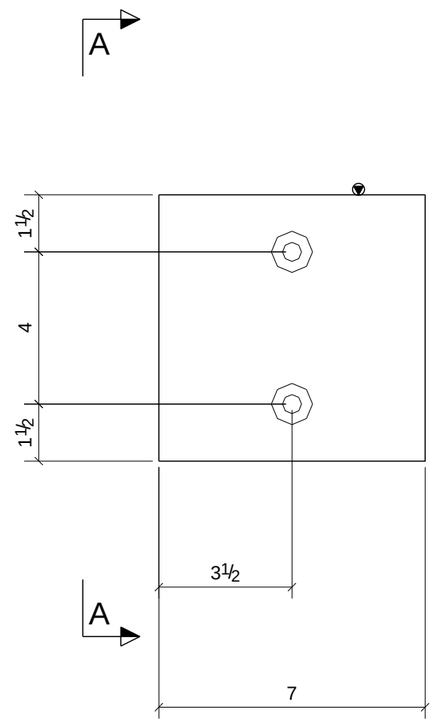

2 - BEAM BEARING PLATES - BP7

PROCESS CONTROL
PROCESS BY
FAB: _____
FIT AND WELD: _____
INSPECTION: _____
OTHER (IF NEEDED) _____
_____ : _____
_____ : _____
_____ : _____
_____ : _____
_____ : _____
REFERENCE LATEST ERECTION DRAWINGS FOR MATERIAL & FABRICATION INFORMATION

DATE	NO.	DESCRIPTION	BY
5/28/11	B	For Checking	TMc
5/16/11	A	For Approval	TMc

BILL OF MATERIAL

Qty Ea.	Qty Tot	Piece Mark	Description	Length	Weight Total	Remarks	Adv Mill #	Steel Grade
	2	BP7	BEAM BEARING PLATES					
	2		BAR3/4"X7"	0'-7"	21	SQ-2		A36
	4		STUD 1/2" DIA	0'-6"	2			

STEEL ASTM	A992	UNO
ELECTRODES	E70XX L.H.	UNO
WELDS	1/4" FILLET	UNO
OPEN HOLES	13/16" UNO	FINISH PER SPECS
BOLTS	3/4" A325N	UNO
PAINT	1 S/C STD PRIMER U.N.O.	UNO

PROJECT NAME
OLDE ORCHARD ELEMENTARY SCHOOL
LOCATION
800 McNAUGHTEN RD. COLUMBUS, OHIO 43213
CONTRACTOR
THOMAS AND MARKER CONSTRUCTION
ARCHITECT
BRAUN & STEIDL

North Central Fabrication, Ltd.
NORTH CENTRAL FABRICATION
Mansfield, OH 44906
419-529-2744 FAX 419-529-5387 http://www.northcentralfab
AISC CERTIFIED FABRICATOR

DESCRIPTION	DATE	DATE	JOB No.
EMBED PLATE	05/10/2011		70234
	DRAWN BY TMc	CHECKED BY TAN	DRG No. BP7

PHASE				
1	2	3	4	5
1	1	0	0	0

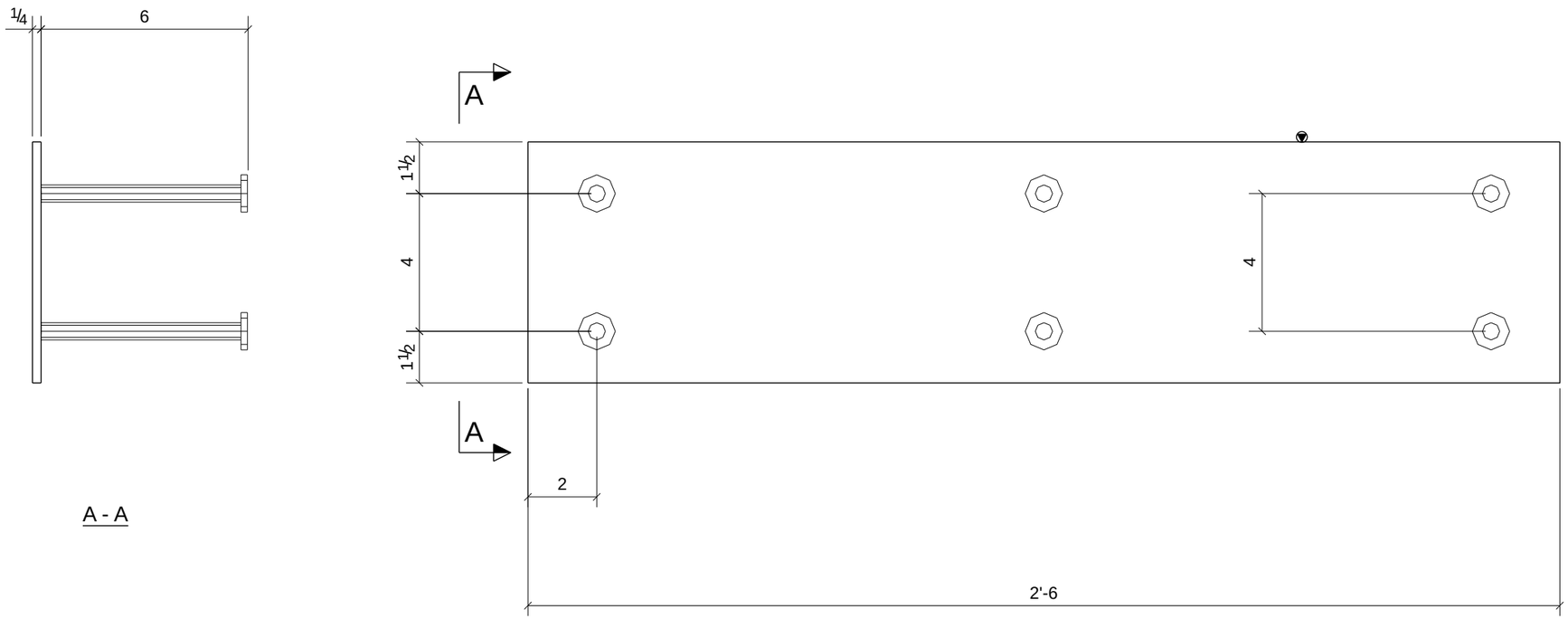

A - A

2 - BEAM BEARING PLATES - BP8

PROCESS CONTROL
PROCESS BY
FAB: _____
FIT AND WELD: _____
INSPECTION: _____
OTHER (IF NEEDED) _____
_____ : _____
_____ : _____
_____ : _____
_____ : _____
_____ : _____
REFERENCE LATEST ERECTION DRAWINGS FOR MATERIAL & FABRICATION INFORMATION

DATE	NO.	DESCRIPTION	BY
5/28/11	B	For Checking	TMc
5/16/11	A	For Approval	TMc

BILL OF MATERIAL

Qty Ea.	Qty Tot	Piece Mark	Description	Length	Weight Total	Remarks	Adv Mill #	Steel Grade
	2	BP8	BEAM BEARING PLATES					
	2		BAR1/4"X7"	2'-6"	30	SQ-2		A36
	12		STUD 1/2" DIA	0'-6"	5			

STEEL ASTM	A992	UNO
ELECTRODES	E70XX L.H.	UNO
WELDS	1/4" FILLET	UNO
OPEN HOLES	13/16" UNO	FINISH PER SPECS
BOLTS	3/4" A325N	UNO
PAINT	1 S/C STD PRIMER U.N.O.	UNO

PROJECT NAME
OLDE ORCHARD ELEMENTARY SCHOOL
LOCATION
800 McNAUGHTEN RD. COLUMBUS, OHIO 43213
CONTRACTOR
THOMAS AND MARKER CONSTRUCTION
ARCHITECT
BRAUN & STEIDL

North Central Fabrication, Ltd.
NORTH CENTRAL FABRICATION
Mansfield, OH 44906
419-529-2744 FAX 419-529-5387 http://www.northcentralfab
AISC CERTIFIED FABRICATOR

DESCRIPTION	DATE	DATE	JOB No.
EMBED PLATE	05/10/2011		70234
	DRAWN BY TMc	CHECKED BY TAN	DRG No. BP8

PHASE				
1	2	3	4	5
11	0	0	0	0

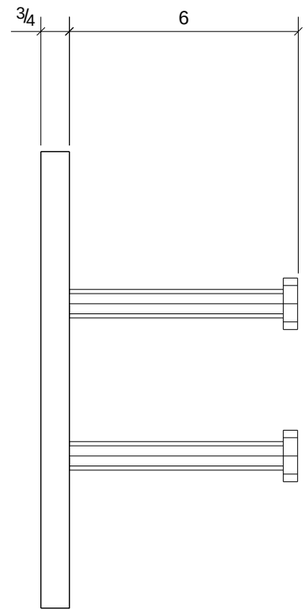

A - A

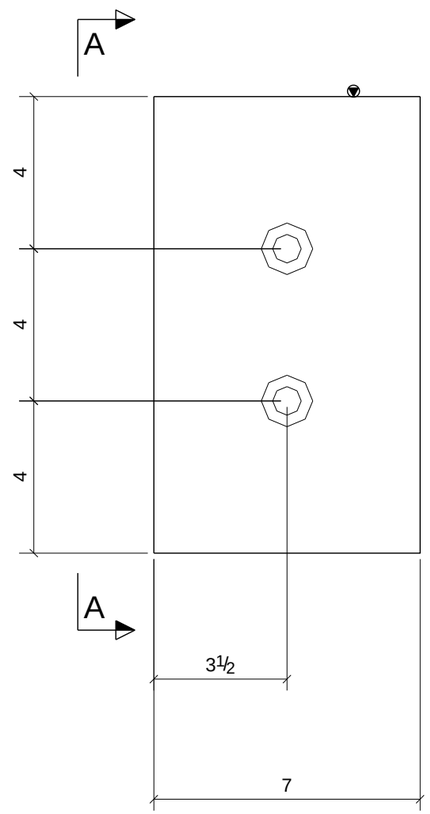

11 - BEAM BEARING PLATES - BP9

PROCESS CONTROL
PROCESS BY
FAB: _____
FIT AND WELD: _____
INSPECTION: _____
OTHER (IF NEEDED) _____
_____ : _____
_____ : _____
_____ : _____
_____ : _____
_____ : _____
REFERENCE LATEST ERECTION DRAWINGS FOR MATERIAL & FABRICATION INFORMATION

DATE	NO.	DESCRIPTION	BY
5/28/11	B	For Checking	TMc
5/16/11	A	For Approval	TMc

BILL OF MATERIAL

Qty Ea.	Qty Tot	Piece Mark	Description	Length	Weight Total	Remarks	Adv Mill #	Steel Grade
	11	BP9	BEAM BEARING PLATES					
	11		BAR3/4"X7"	1'-0"	197	SQ-2		A36
	22		STUD 3/4" DIA	0'-6"	19			

STEEL ASTM	A992		UNO
ELECTRODES	E70XX L.H.		UNO
WELDS	1/4" FILLET		UNO
OPEN HOLES	13/16" UNO	FINISH	PER SPECS
BOLTS	3/4" A325N		UNO
PAINT	1 S/C STD PRIMER U.N.O.		UNO

PROJECT NAME
OLDE ORCHARD ELEMENTARY SCHOOL
LOCATION
800 McNAUGHTEN RD. COLUMBUS, OHIO 43213
CONTRACTOR
THOMAS AND MARKER CONSTRUCTION
ARCHITECT
BRAUN & STEIDL

North Central Fabrication, Ltd.
NORTH CENTRAL FABRICATION
Mansfield, OH 44906
419-529-2744 FAX 419-529-5387 http://www.northcentralfab
AISC CERTIFIED FABRICATOR

DESCRIPTION	DATE	DATE	JOB No.
EMBED PLATE	05/10/2011		70234
	DRAWN BY TMc	CHECKED BY TAN	DRG No. BP9

PHASE				
1	2	3	4	5
36	12	0	0	0

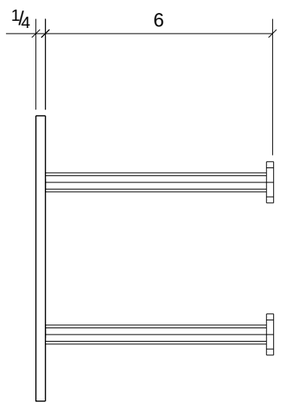

A - A

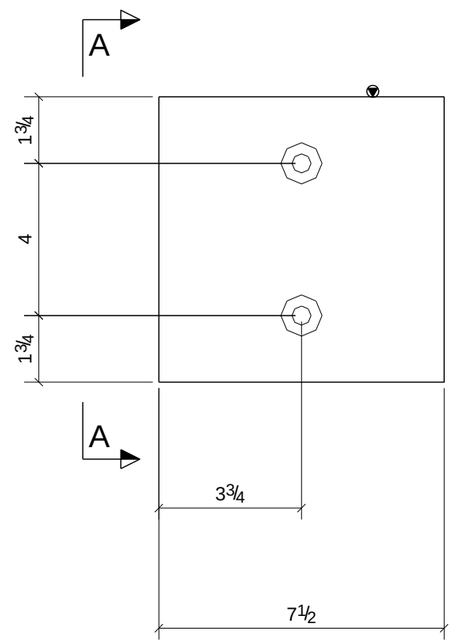

48 - BEAM BEARING PLATES - BP10

PROCESS CONTROL
PROCESS BY
FAB: _____
FIT AND WELD: _____
INSPECTION: _____
OTHER (IF NEEDED) _____
_____ : _____
_____ : _____
_____ : _____
_____ : _____
_____ : _____
REFERENCE LATEST ERECTION DRAWINGS FOR MATERIAL & FABRICATION INFORMATION

DATE	NO.	DESCRIPTION	BY
5/28/11	B	For Checking	TMc
5/16/11	A	For Approval	TMc

BILL OF MATERIAL

Qty Ea.	Qty Tot	Piece Mark	Description	Length	Weight Total	Remarks	Adv Mill #	Steel Grade
	48	BP10	BEAM BEARING PLATES					
	48		BAR1/4"X7 1/2"	0'-7 1/2"	191	SQ-2		A36
	96		STUD 1/2" DIA	0'-6"	37			

STEEL ASTM	A992	UNO
ELECTRODES	E70XX L.H.	UNO
WELDS	1/4" FILLET	UNO
OPEN HOLES	13/16" UNO	FINISH PER SPECS
BOLTS	3/4" A325N	UNO
PAINT	1 S/C STD PRIMER U.N.O.	UNO

PROJECT NAME
OLDE ORCHARD ELEMENTARY SCHOOL
LOCATION
800 McNAUGHTEN RD. COLUMBUS, OHIO 43213
CONTRACTOR
THOMAS AND MARKER CONSTRUCTION
ARCHITECT
BRAUN & STEIDL

North Central Fabrication, Ltd.
NORTH CENTRAL FABRICATION
Mansfield, OH 44906
419-529-2744 FAX 419-529-5387 http://www.northcentralfab
AISC CERTIFIED FABRICATOR

DESCRIPTION	DATE	DATE	JOB No.
EMBED PLATE	05/12/2011		70234
	DRAWN BY TMc	CHECKED BY TAN	DRG No. BP10

PHASE				
1	2	3	4	5
3	0	0	0	0

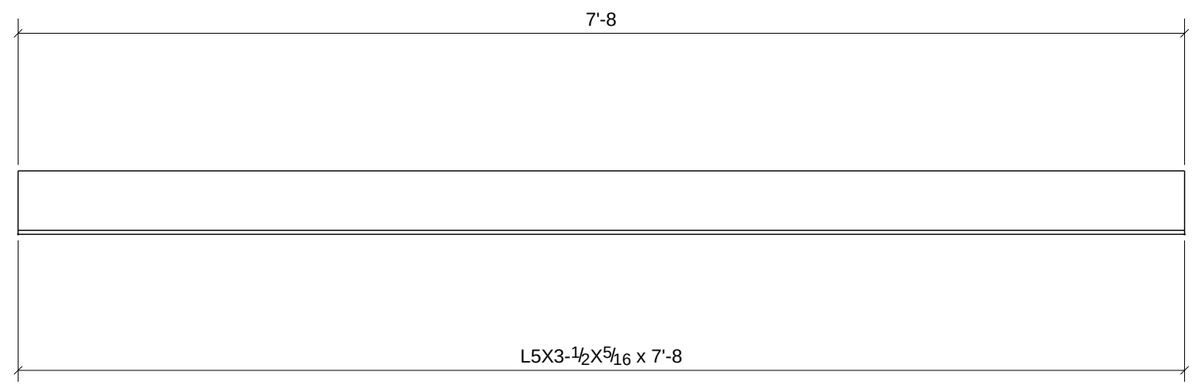

LINTEL TYPE: C3 / M.O. = 6'-4 / LOC. : (RM X192) / FRAME TYPE: F6

PROCESS CONTROL
PROCESS BY
FAB: _____
FIT AND WELD: _____
INSPECTION: _____
OTHER (IF NEEDED)
_____ : _____
_____ : _____
_____ : _____
_____ : _____
_____ : _____
REFERENCE LATEST ERECTION DRAWINGS FOR MATERIAL & FABRICATION INFORMATION

SHOP NOTE: (LINTEL TYPE INDICATES 2 OR 3 ANGLES FOR EACH LINTEL)

3 - LINTELS - L1

DATE	NO.	DESCRIPTION	BY
5/28/11	B	For Checking	TMc
5/16/11	A	For Approval	TMc

BILL OF MATERIAL

Qty Ea.	Qty Tot	Piece Mark	Description	Length	Weight Total	Remarks	Adv Mill #	Steel Grade
	3	L1	LINTELS					
	3		L5X3-1/2X5/16	7'-8"	200	SQ-2 GALVANIZED		A36

STEEL ASTM	A992	UNO
ELECTRODES	E70XX L.H.	UNO
WELDS	1/4" FILLET	UNO
OPEN HOLES	13/16" UNO	FINISH PER SPECS
BOLTS	3/4" A325N	UNO
PAINT	1 S/C STD PRIMER U.N.O.	UNO

PROJECT NAME
OLDE ORCHARD ELEMENTARY SCHOOL

LOCATION
800 McNAUGHTEN RD. COLUMBUS, OHIO 43213

CONTRACTOR
THOMAS AND MARKER CONSTRUCTION

ARCHITECT
BRAUN & STEIDL

North Central Fabrication, Ltd.

NORTH CENTRAL FABRICATION
Mansfield, OH 44906
419-529-2744 FAX 419-529-5387 http://www.northcentralfab

AISC CERTIFIED FABRICATOR

DESCRIPTION	DATE		JOB No.
LINTEL	05/14/2011	DATE	70234
	DRAWN BY TMc	CHECKED BY TAN	DRG No. L1

PHASE				
1	2	3	4	5
15	0	0	0	0

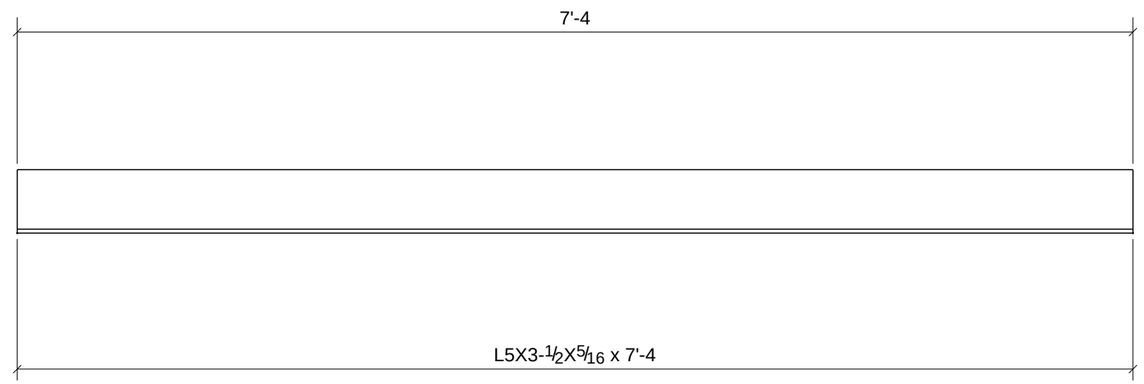

LINTEL TYPE: C3 / M.O. = 6'-0 / LOC. : (RM 154T) / FRAME TYPE: W6

LINTEL TYPE: C3 / M.O.= 6'-0 /LOC: (RM 152T) / FRAME TYPE: W6

LINTEL TYPE: C3 / M.O.= 6'-0 /LOC: (RM 210T) / FRAME TYPE: W6

LINTEL TYPE: C3 / M.O.= 6'-0 /LOC: (RM 212T) / FRAME TYPE: W6

LINTEL TYPE: C3 / M.O.= 6'-0 /LOC: (RM 235T) / FRAME TYPE: W6

15 - LINTELS - L2

SHOP NOTE: (LINTEL TYPE INDICATES 2 OR 3 ANGLES FOR EACH LINTEL)

PROCESS CONTROL
PROCESS BY
FAB: _____
FIT AND WELD: _____
INSPECTION: _____
OTHER (IF NEEDED)
_____ : _____
_____ : _____
_____ : _____
_____ : _____
REFERENCE LATEST ERECTION DRAWINGS FOR MATERIAL & FABRICATION INFORMATION

DATE	NO.	DESCRIPTION	BY
5/28/11	B	For Checking	TMc
5/16/11	A	For Approval	TMc

BILL OF MATERIAL

Qty Ea.	Qty Tot	Piece Mark	Description	Length	Weight Total	Remarks	Adv Mill #	Steel Grade
	15	L2	LINTELS					
	15		L5X3-1/2X5/16	7'-4"	958	SQ-2 GALVANIZED		A36

STEEL ASTM	A992	UNO
ELECTRODES	E70XX L.H.	UNO
WELDS	1/4" FILLET	UNO
OPEN HOLES	13/16" UNO	FINISH PER SPECS
BOLTS	3/4" A325N	UNO
PAINT	1 S/C STD PRIMER U.N.O.	UNO

PROJECT NAME
OLDE ORCHARD ELEMENTARY SCHOOL

LOCATION
800 McNAUGHTEN RD. COLUMBUS, OHIO 43213

CONTRACTOR
THOMAS AND MARKER CONSTRUCTION

ARCHITECT
BRAUN & STEIDL

North Central Fabrication, Ltd.
NORTH CENTRAL FABRICATION
Mansfield, OH 44906
419-529-2744 FAX 419-529-5387 http://www.northcentralfab
AISC CERTIFIED FABRICATOR

DESCRIPTION	DATE	DATE	JOB No.
LINTEL	05/14/2011		70234
	DRAWN BY TMc	CHECKED BY TAN	DRG No. L2

PHASE				
1	2	3	4	5
6	0	0	0	0

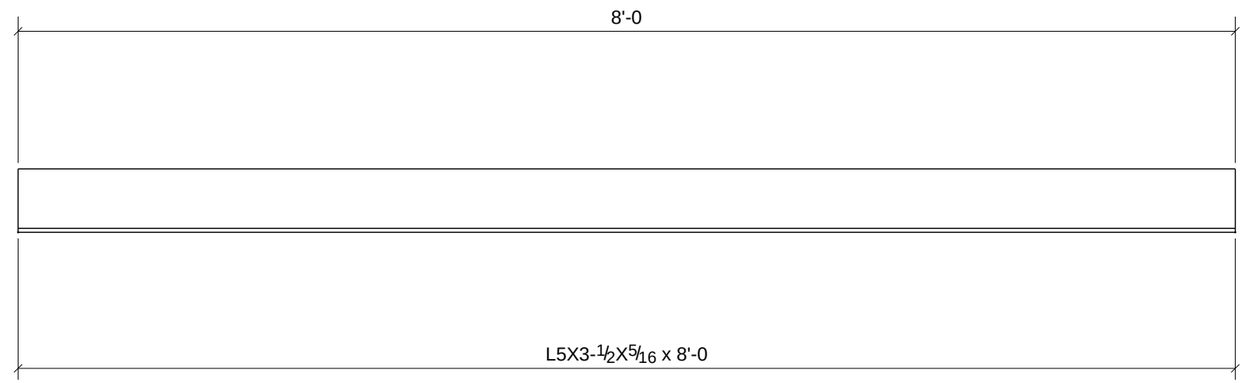

LINTEL TYPE: C3 / M.O. = 6'-8 / LOC. : (RM 228) / FRAME TYPE: W9

LINTEL TYPE: C3 / M.O.= 6'-8 /LOC: (RM 231) / FRAME TYPE: W9

PROCESS CONTROL
PROCESS BY
FAB: _____
FIT AND WELD: _____
INSPECTION: _____
OTHER (IF NEEDED)
_____ : _____
_____ : _____
_____ : _____
_____ : _____
_____ : _____
REFERENCE LATEST ERECTION DRAWINGS FOR MATERIAL & FABRICATION INFORMATION

SHOP NOTE: (LINTEL TYPE INDICATES 2 OR 3 ANGLES FOR EACH LINTEL)

6 - LINTELS - L3

DATE	NO.	DESCRIPTION	BY
5/28/11	B	For Checking	TMc
5/16/11	A	For Approval	TMc

BILL OF MATERIAL

Qty Ea.	Qty Tot	Piece Mark	Description	Length	Weight Total	Remarks	Adv Mill #	Steel Grade
	6	L3	LINTELS					
	6		L5X3-1/2X5/16	8'-0"	418	SQ-2 GALVANIZED		A36

STEEL ASTM	A992		UNO
ELECTRODES	E70XX L.H.		UNO
WELDS	1/4" FILLET		UNO
OPEN HOLES	13/16"	UNO	FINISH PER SPECS
BOLTS	3/4" A325N		UNO
PAINT	1 S/C STD PRIMER U.N.O.		UNO

PROJECT NAME
OLDE ORCHARD ELEMENTARY SCHOOL

LOCATION
800 McNAUGHTEN RD. COLUMBUS, OHIO 43213

CONTRACTOR
THOMAS AND MARKER CONSTRUCTION

ARCHITECT
BRAUN & STEIDL

North Central Fabrication, Ltd.

NORTH CENTRAL FABRICATION
Mansfield, OH 44906
419-529-2744 FAX 419-529-5387 http://www.northcentralfab

AISC CERTIFIED FABRICATOR

DESCRIPTION	DATE	DATE	JOB No.
LINTEL	05/14/2011		70234
	DRAWN BY TMc	CHECKED BY TAN	DRG No. L3

PHASE				
1	2	3	4	5
3	0	0	0	0

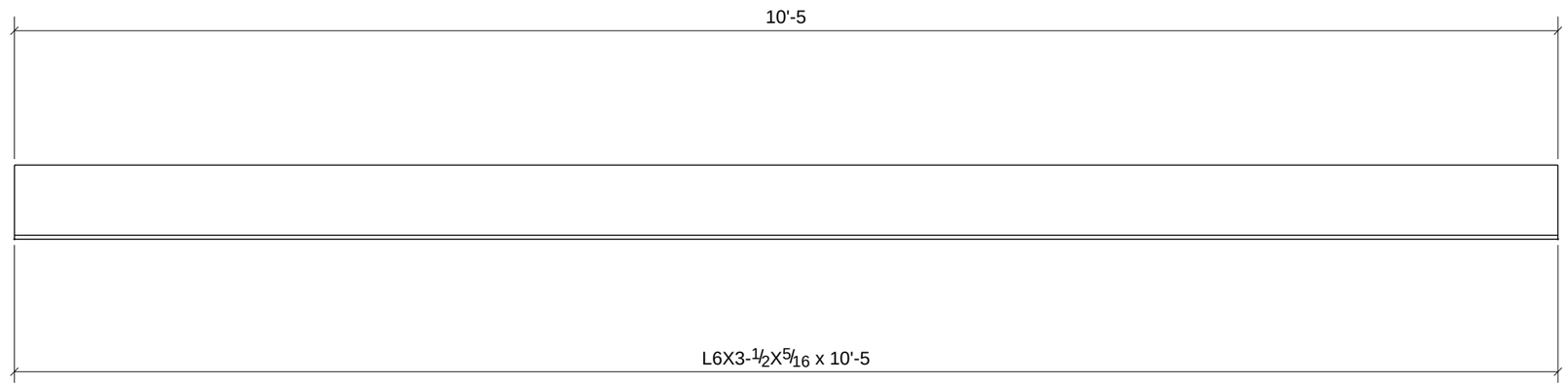

LINTEL TYPE: D3 / M.O. = 9'-9-1/2 / LOC. : (RM 103) / FRAME TYPE: W25

PROCESS CONTROL
PROCESS BY
FAB: _____
FIT AND WELD: _____
INSPECTION: _____
OTHER (IF NEEDED) _____
_____ : _____
_____ : _____
_____ : _____
_____ : _____
REFERENCE LATEST ERECTION DRAWINGS FOR MATERIAL & FABRICATION INFORMATION

SHOP NOTE: (LINTEL TYPE INDICATES 2 OR 3 ANGLES FOR EACH LINTEL)

3 - LINTELS - L4

DATE	NO.	DESCRIPTION	BY
5/28/11	B	For Checking	TMc
5/16/11	A	For Approval	TMc

BILL OF MATERIAL

Qty Ea.	Qty Tot	Piece Mark	Description	Length	Weight Total	Remarks	Adv Mill #	Steel Grade
	3	L4	LINTELS					
	3		L6X3-1/2X5/16	10'-5"	305	SQ-2 GALVANIZED		A36

STEEL ASTM	A992	UNO
ELECTRODES	E70XX L.H.	UNO
WELDS	1/4" FILLET	UNO
OPEN HOLES	13/16" UNO	FINISH PER SPECS
BOLTS	3/4" A325N	UNO
PAINT	1 S/C STD PRIMER U.N.O.	UNO

PROJECT NAME
OLDE ORCHARD ELEMENTARY SCHOOL

LOCATION
800 McNAUGHTEN RD. COLUMBUS, OHIO 43213

CONTRACTOR
THOMAS AND MARKER CONSTRUCTION

ARCHITECT
BRAUN & STEIDL

North Central Fabrication, Ltd.
NORTH CENTRAL FABRICATION
Mansfield, OH 44906
419-529-2744 FAX 419-529-5387 http://www.northcentralfab
AISC CERTIFIED FABRICATOR

DESCRIPTION	DATE	DATE	JOB No.
LINTEL	05/14/2011		70234
	DRAWN BY TMc	CHECKED BY TAN	DRG No. L4

PHASE				
1	2	3	4	5
2	0	0	0	0

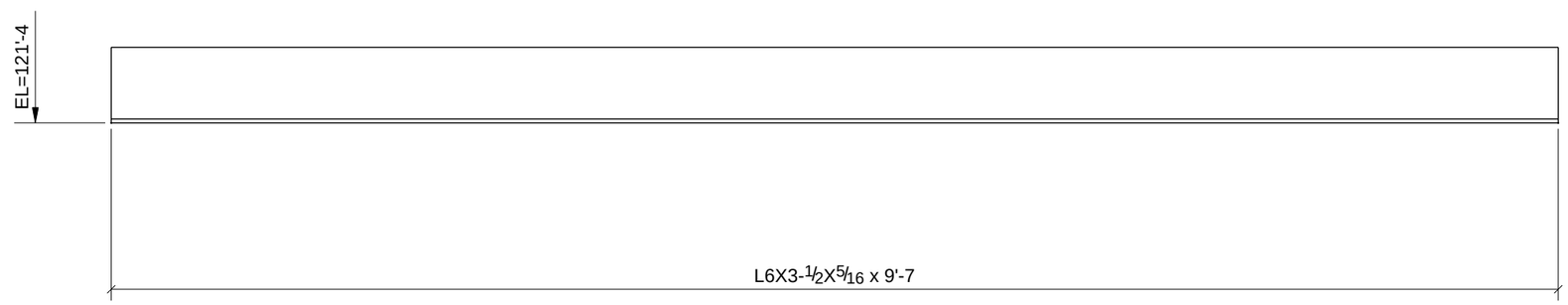

LINTEL TYPE: D2 / M.O. = 8'-3 / LOC. : (RM M236-B,C) / FRAME TYPE: F3

PROCESS CONTROL
PROCESS BY
FAB: _____
FIT AND WELD: _____
INSPECTION: _____
OTHER (IF NEEDED)
_____ : _____
_____ : _____
_____ : _____
_____ : _____
REFERENCE LATEST ERECTION DRAWINGS FOR MATERIAL & FABRICATION INFORMATION

SHOP NOTE: (LINTEL TYPE INDICATES 2 OR 3 ANGLES FOR EACH LINTEL)

2 - LINTELS - L5

DATE	NO.	DESCRIPTION	BY
5/28/11	B	For Checking	TMc
5/16/11	A	For Approval	TMc

BILL OF MATERIAL

Qty Ea.	Qty Tot	Piece Mark	Description	Length	Weight Total	Remarks	Adv Mill #	Steel Grade
	2	L5	LINTELS					
	2		L6X3-1/2X5/16	9'-7"	187	SQ-2		A36

STEEL ASTM	A992	UNO
ELECTRODES	E70XX L.H.	UNO
WELDS	1/4" FILLET	UNO
OPEN HOLES	13/16" UNO	FINISH PER SPECS
BOLTS	3/4" A325N	UNO
PAINT	1 S/C STD PRIMER U.N.O.	UNO

PROJECT NAME
OLDE ORCHARD ELEMENTARY SCHOOL

LOCATION
800 McNAUGHTEN RD. COLUMBUS, OHIO 43213

CONTRACTOR
THOMAS AND MARKER CONSTRUCTION

ARCHITECT
BRAUN & STEIDL

North Central Fabrication, Ltd.

NORTH CENTRAL FABRICATION
Mansfield, OH 44906
419-529-2744 FAX 419-529-5387 http://www.northcentralfab

AISC CERTIFIED FABRICATOR

DESCRIPTION	DATE	DATE	JOB No.
LINTEL	05/14/2011		70234
	DRAWN BY TMc	CHECKED BY TAN	DRG No. L5

PHASE				
1	2	3	4	5
2	0	0	0	0

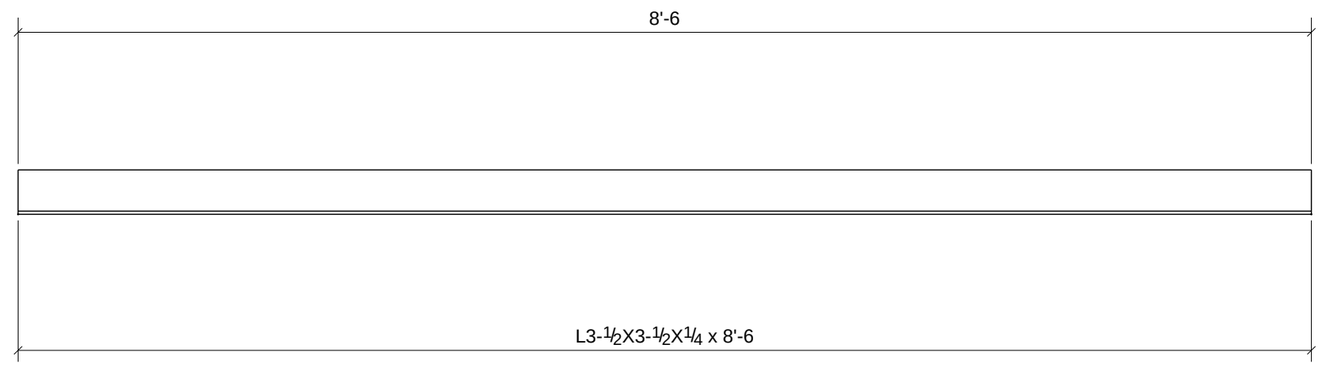

LINTEL TYPE: A2 / M.O. = 7'-2 / LOC. : (RM 167 & 169) / FRAME TYPE: F3

PROCESS CONTROL
PROCESS BY
FAB: _____
FIT AND WELD: _____
INSPECTION: _____
OTHER (IF NEEDED)
_____ : _____
_____ : _____
_____ : _____
_____ : _____
REFERENCE LATEST ERECTION DRAWINGS FOR MATERIAL & FABRICATION INFORMATION

SHOP NOTE: (LINTEL TYPE INDICATES 2 OR 3 ANGLES FOR EACH LINTEL)

2 - LINTELS - L6

DATE	NO.	DESCRIPTION	BY
5/28/11	B	For Checking	TMc
5/16/11	A	For Approval	TMc

BILL OF MATERIAL

Qty Ea.	Qty Tot	Piece Mark	Description	Length	Weight Total	Remarks	Adv Mill #	Steel Grade
	2	L6	LINTELS					
	2		L3-1/2X3-1/2X1/4	8'-6"	98	SQ-2		A36

STEEL ASTM	A992	UNO
ELECTRODES	E70XX L.H.	UNO
WELDS	1/4" FILLET	UNO
OPEN HOLES	13/16" UNO	FINISH PER SPECS
BOLTS	3/4" A325N	UNO
PAINT	1 S/C STD PRIMER U.N.O.	UNO

PROJECT NAME
OLDE ORCHARD ELEMENTARY SCHOOL

LOCATION
800 McNAUGHTEN RD. COLUMBUS, OHIO 43213

CONTRACTOR
THOMAS AND MARKER CONSTRUCTION

ARCHITECT
BRAUN & STEIDL

North Central Fabrication, Ltd.

NORTH CENTRAL FABRICATION
Mansfield, OH 44906
419-529-2744 FAX 419-529-5387 http://www.northcentralfab

AISC CERTIFIED FABRICATOR

DESCRIPTION: LINTEL	DATE: 05/14/2011	DATE	JOB No. 70234
	DRAWN BY: TMc	CHECKED BY: TAN	DRG No. L6

PHASE				
1	2	3	4	5
2	0	0	0	0

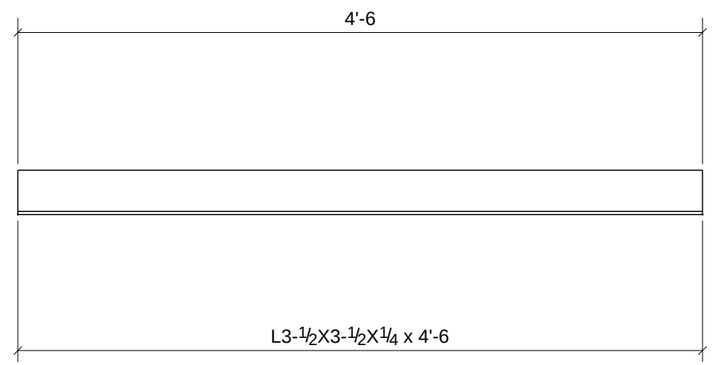

LINTEL TYPE: A2 / M.O. = 3'-4 / LOC. : (RM 165) / FRAME TYPE: F3

PROCESS CONTROL
PROCESS BY
FAB: _____
FIT AND WELD: _____
INSPECTION: _____
OTHER (IF NEEDED) _____
_____ : _____
_____ : _____
_____ : _____
_____ : _____
REFERENCE LATEST ERECTION DRAWINGS FOR MATERIAL & FABRICATION INFORMATION

SHOP NOTE: (LINTEL TYPE INDICATES 2 OR 3 ANGLES FOR EACH LINTEL)

2 - LINTELS - L7

DATE	NO.	DESCRIPTION	BY
5/28/11	B	For Checking	TMc
5/16/11	A	For Approval	TMc

BILL OF MATERIAL

Qty Ea.	Qty Tot	Piece Mark	Description	Length	Weight Total	Remarks	Adv Mill #	Steel Grade
	2	L7	LINTELS					
	2		L3-1/2X3-1/2X1/4	4'-6"	52	SQ-2		A36

STEEL ASTM	A992	UNO
ELECTRODES	E70XX L.H.	UNO
WELDS	1/4" FILLET	UNO
OPEN HOLES	13/16" UNO	FINISH PER SPECS
BOLTS	3/4" A325N	UNO
PAINT	1 S/C STD PRIMER U.N.O.	UNO

PROJECT NAME
OLDE ORCHARD ELEMENTARY SCHOOL

LOCATION
800 McNAUGHTEN RD. COLUMBUS, OHIO 43213

CONTRACTOR
THOMAS AND MARKER CONSTRUCTION

ARCHITECT
BRAUN & STEIDL

North Central Fabrication, Ltd.
NORTH CENTRAL FABRICATION
Mansfield, OH 44906
419-529-2744 FAX 419-529-5387 http://www.northcentralfab
AISC CERTIFIED FABRICATOR

DESCRIPTION	DATE	DATE	JOB No.
LINTEL	05/14/2011		70234
	DRAWN BY TMc	CHECKED BY TAN	DRG No. L7

PHASE				
1	2	3	4	5
4	0	0	0	0

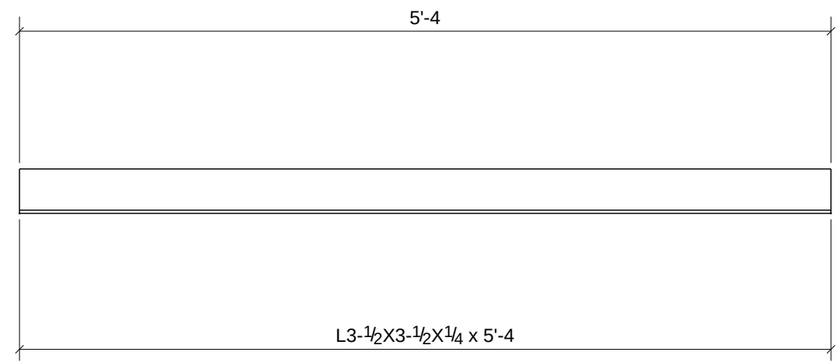

LINTEL TYPE: A2 / M.O. = 4'-0 / LOC. : (RM 165) / FRAME TYPE: W17

LINTEL TYPE: A2 / M.O.= 4'-0 /LOC: (RM 165) / FRAME TYPE: W17

PROCESS CONTROL
PROCESS BY
FAB: _____
FIT AND WELD: _____
INSPECTION: _____
OTHER (IF NEEDED) _____
_____ : _____
_____ : _____
_____ : _____
_____ : _____
REFERENCE LATEST ERECTION DRAWINGS FOR MATERIAL & FABRICATION INFORMATION

SHOP NOTE: (LINTEL TYPE INDICATES 2 OR 3 ANGLES FOR EACH LINTEL)

4 - LINTELS - L8

DATE	NO.	DESCRIPTION	BY
5/28/11	B	For Checking	TMc
5/16/11	A	For Approval	TMc

BILL OF MATERIAL

Qty Ea.	Qty Tot	Piece Mark	Description	Length	Weight Total	Remarks	Adv Mill #	Steel Grade
	4	L8	LINTELS					
	4		L3-1/2X3-1/2X1/4	5'-4"	123	SQ-2		A36

STEEL ASTM	A992	UNO
ELECTRODES	E70XX L.H.	UNO
WELDS	1/4" FILLET	UNO
OPEN HOLES	13/16" UNO	FINISH PER SPECS
BOLTS	3/4" A325N	UNO
PAINT	1 S/C STD PRIMER U.N.O.	UNO

PROJECT NAME
OLDE ORCHARD ELEMENTARY SCHOOL

LOCATION
800 McNAUGHTEN RD. COLUMBUS, OHIO 43213

CONTRACTOR
THOMAS AND MARKER CONSTRUCTION

ARCHITECT
BRAUN & STEIDL

North Central Fabrication, Ltd.
NORTH CENTRAL FABRICATION
Mansfield, OH 44906
419-529-2744 FAX 419-529-5387 http://www.northcentralfab
AISC CERTIFIED FABRICATOR

DESCRIPTION	DATE	DATE	JOB No.
LINTEL	05/14/2011		70234
	DRAWN BY TMc	CHECKED BY TAN	DRG No. L8

PHASE				
1	2	3	4	5
2	0	0	0	0

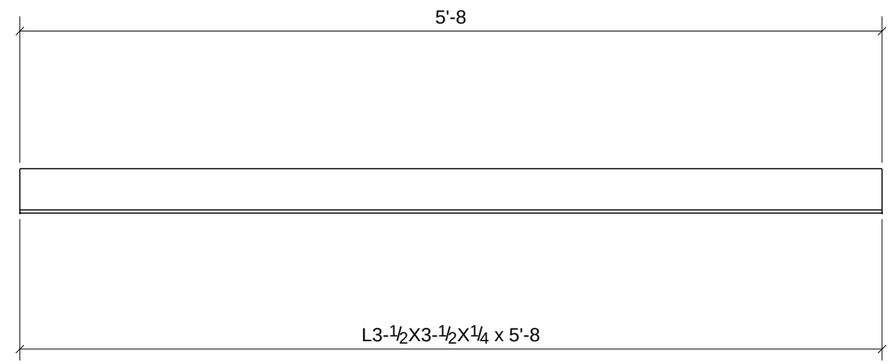

LINTEL TYPE: A2 / M.O. = 4'-2 / LOC. : (RM 163) / FRAME TYPE: F9

PROCESS CONTROL
PROCESS BY
FAB: _____
FIT AND WELD: _____
INSPECTION: _____
OTHER (IF NEEDED) _____
_____ : _____
_____ : _____
_____ : _____
_____ : _____
REFERENCE LATEST ERECTION DRAWINGS FOR MATERIAL & FABRICATION INFORMATION

SHOP NOTE: (LINTEL TYPE INDICATES 2 OR 3 ANGLES FOR EACH LINTEL)

2 - LINTELS - L9

DATE	NO.	DESCRIPTION	BY
5/28/11	B	For Checking	TMc
5/16/11	A	For Approval	TMc

BILL OF MATERIAL

Qty Ea.	Qty Tot	Piece Mark	Description	Length	Weight Total	Remarks	Adv Mill #	Steel Grade
	2	L9	LINTELS					
	2		L3-1/2X3-1/2X1/4	5'-8"	65	SQ-2		A36

STEEL ASTM	A992	UNO
ELECTRODES	E70XX L.H.	UNO
WELDS	1/4" FILLET	UNO
OPEN HOLES	13/16" UNO	FINISH PER SPECS
BOLTS	3/4" A325N	UNO
PAINT	1 S/C STD PRIMER U.N.O.	UNO

PROJECT NAME
OLDE ORCHARD ELEMENTARY SCHOOL

LOCATION
800 McNAUGHTEN RD. COLUMBUS, OHIO 43213

CONTRACTOR
THOMAS AND MARKER CONSTRUCTION

ARCHITECT
BRAUN & STEIDL

North Central Fabrication, Ltd.
NORTH CENTRAL FABRICATION
Mansfield, OH 44906
419-529-2744 FAX 419-529-5387 http://www.northcentralfab
AISC CERTIFIED FABRICATOR

DESCRIPTION	DATE	DATE	JOB No.
LINTEL	05/14/2011		70234
	DRAWN BY TMc	CHECKED BY TAN	DRG No. L9

PHASE				
1	2	3	4	5
16	6	0	0	0

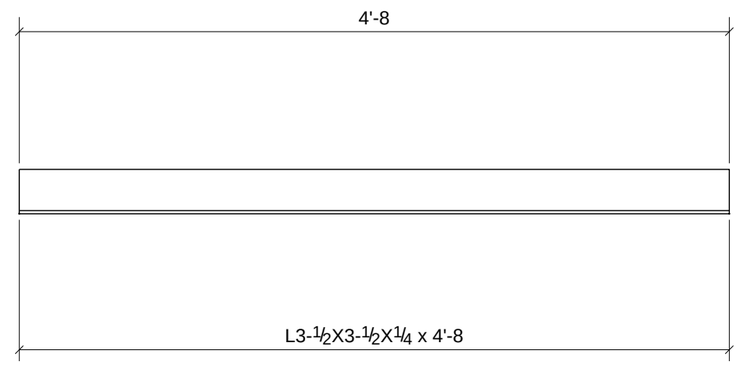

LINTEL TYPE: A2 / M.O. = 3'-4 / LOC. : (RM 157) / FRAME TYPE: F3
LINTEL TYPE: A2 / M.O.= 3'-4 /LOC: (RM 123) / FRAME TYPE: F3
LINTEL TYPE: A2 / M.O.= 3'-4 /LOC: (RM 149A) / FRAME TYPE: F3
LINTEL TYPE: A2 / M.O.= 3'-4 /LOC: (RM 161T) / FRAME TYPE: F3
LINTEL TYPE: A2 / M.O.= 3'-4 /LOC: (RM 205) / FRAME TYPE: F3
LINTEL TYPE: A2 / M.O.= 3'-4 /LOC: (RM 206T) / FRAME TYPE: F3
LINTEL TYPE: A2 / M.O.= 3'-4 /LOC: (RM 208) / FRAME TYPE: F3
LINTEL TYPE: A2 / M.O.= 3'-4 /LOC: (RM E240) / FRAME TYPE: F3
LINTEL TYPE: A2 / M.O.= 3'-4 /LOC: (RM M221) / FRAME TYPE: F3
LINTEL TYPE: A2 / M.O.= 3'-4 /LOC: (RM M242C) / FRAME TYPE: F3
LINTEL TYPE: A2 / M.O.= 3'-4 /LOC: (RM M245) / FRAME TYPE: F3

PROCESS CONTROL
PROCESS BY
FAB: _____
FIT AND WELD: _____
INSPECTION: _____
OTHER (IF NEEDED) _____
_____ : _____
_____ : _____
_____ : _____
_____ : _____
REFERENCE LATEST ERECTION DRAWINGS FOR MATERIAL & FABRICATION INFORMATION

SHOP NOTE: (LINTEL TYPE INDICATES 2 OR 3 ANGLES FOR EACH LINTEL)

22 - LINTELS - L10

DATE	NO.	DESCRIPTION	BY
5/28/11	B	For Checking	TMc
5/16/11	A	For Approval	TMc

BILL OF MATERIAL

Qty Ea.	Qty Tot	Piece Mark	Description	Length	Weight Total	Remarks	Adv Mill #	Steel Grade
	22	L10	LINTELS					
	22		L3-1/2X3-1/2X1/4	4'-8"	590	SQ-2		A36

STEEL ASTM	A992	UNO
ELECTRODES	E70XX L.H.	UNO
WELDS	1/4" FILLET	UNO
OPEN HOLES	13/16" UNO	FINISH PER SPECS
BOLTS	3/4" A325N	UNO
PAINT	1 S/C STD PRIMER U.N.O.	UNO

PROJECT NAME
OLDE ORCHARD ELEMENTARY SCHOOL

LOCATION
800 McNAUGHTEN RD. COLUMBUS, OHIO 43213

CONTRACTOR
THOMAS AND MARKER CONSTRUCTION

ARCHITECT
BRAUN & STEIDL

North Central Fabrication, Ltd.
NORTH CENTRAL FABRICATION
Mansfield, OH 44906
419-529-2744 FAX 419-529-5387 http://www.northcentralfab
AISC CERTIFIED FABRICATOR

DESCRIPTION	DATE	DATE	JOB No.
LINTEL	05/14/2011		70234
	DRAWN BY TMc	CHECKED BY TAN	DRG No. L10

PHASE				
1	2	3	4	5
2	0	0	0	0

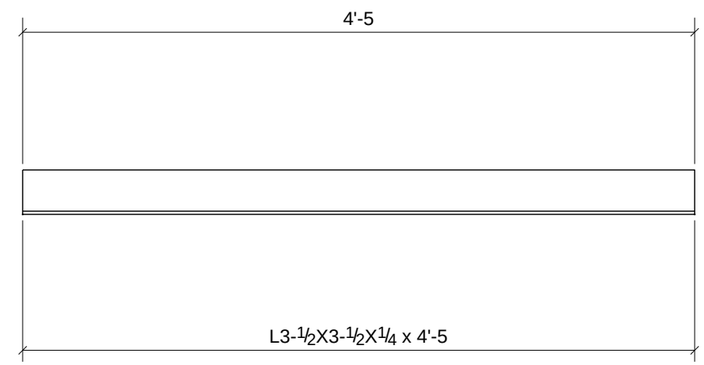

LINTEL TYPE: A2 / M.O. = 3'-4 / LOC. : (RM 150) / FRAME TYPE: F3

PROCESS CONTROL
PROCESS BY
FAB: _____
FIT AND WELD: _____
INSPECTION: _____
OTHER (IF NEEDED) _____
_____ : _____
_____ : _____
_____ : _____
_____ : _____
REFERENCE LATEST ERECTION DRAWINGS FOR MATERIAL & FABRICATION INFORMATION

SHOP NOTE: (LINTEL TYPE INDICATES 2 OR 3 ANGLES FOR EACH LINTEL)

2 - LINTELS - L12

DATE	NO.	DESCRIPTION	BY
5/28/11	B	For Checking	TMc
5/16/11	A	For Approval	TMc

BILL OF MATERIAL

Qty Ea.	Qty Tot	Piece Mark	Description	Length	Weight Total	Remarks	Adv Mill #	Steel Grade
	2	L12	LINTELS					
	2		L3-1/2X3-1/2X1/4	4'-5"	51	SQ-2		A36

STEEL ASTM	A992	UNO
ELECTRODES	E70XX L.H.	UNO
WELDS	1/4" FILLET	UNO
OPEN HOLES	13/16" UNO	FINISH PER SPECS
BOLTS	3/4" A325N	UNO
PAINT	1 S/C STD PRIMER U.N.O.	UNO

PROJECT NAME
OLDE ORCHARD ELEMENTARY SCHOOL

LOCATION
800 McNAUGHTEN RD. COLUMBUS, OHIO 43213

CONTRACTOR
THOMAS AND MARKER CONSTRUCTION

ARCHITECT
BRAUN & STEIDL

North Central Fabrication, Ltd.

NORTH CENTRAL FABRICATION
Mansfield, OH 44906
419-529-2744 FAX 419-529-5387 http://www.northcentralfab

AISC CERTIFIED FABRICATOR

DESCRIPTION	DATE	DATE	JOB No.
LINTEL	05/14/2011		70234
	DRAWN BY TMc	CHECKED BY TAN	DRG No. L12

PHASE				
1	2	3	4	5
2	0	0	0	0

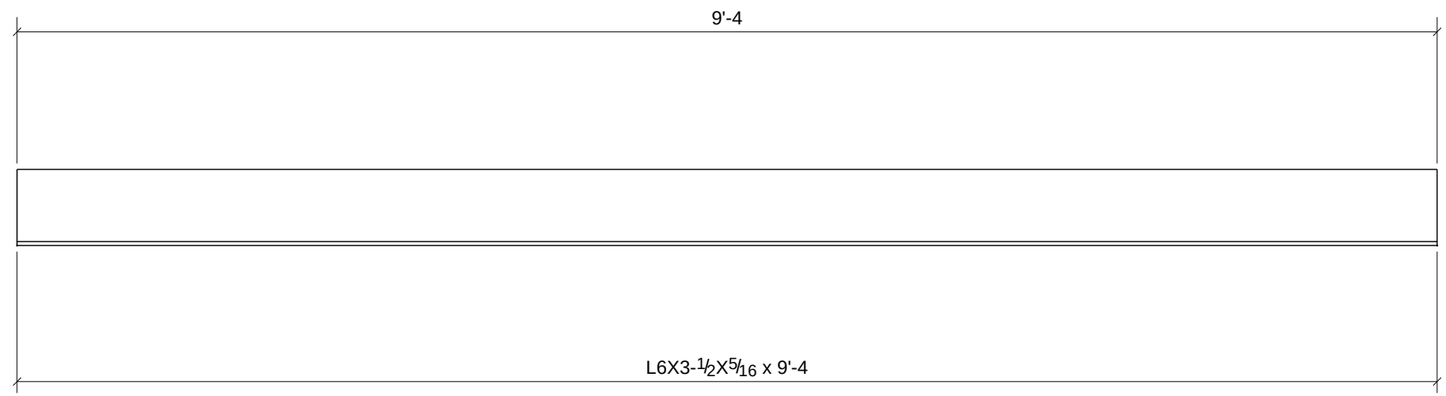

LINTEL TYPE: D2 / M.O. = 8'-0 / LOC. : (RM 131) / FRAME TYPE: L1

PROCESS CONTROL
PROCESS BY
FAB: _____
FIT AND WELD: _____
INSPECTION: _____
OTHER (IF NEEDED) _____
_____ : _____
_____ : _____
_____ : _____
_____ : _____
REFERENCE LATEST ERECTION DRAWINGS FOR MATERIAL & FABRICATION INFORMATION

SHOP NOTE: (LINTEL TYPE INDICATES 2 OR 3 ANGLES FOR EACH LINTEL)

2 - LINTELS - L13

DATE	NO.	DESCRIPTION	BY
5/28/11	B	For Checking	TMc
5/16/11	A	For Approval	TMc

BILL OF MATERIAL

Qty Ea.	Qty Tot	Piece Mark	Description	Length	Weight Total	Remarks	Adv Mill #	Steel Grade
	2	L13	LINTELS					
	2		L6X3-1/2X5/16	9'-4"	182	SQ-2		A36

STEEL ASTM	A992	UNO
ELECTRODES	E70XX L.H.	UNO
WELDS	1/4" FILLET	UNO
OPEN HOLES	13/16" UNO	FINISH PER SPECS
BOLTS	3/4" A325N	UNO
PAINT	1 S/C STD PRIMER U.N.O.	UNO

PROJECT NAME
OLDE ORCHARD ELEMENTARY SCHOOL

LOCATION
800 McNAUGHTEN RD. COLUMBUS, OHIO 43213

CONTRACTOR
THOMAS AND MARKER CONSTRUCTION

ARCHITECT
BRAUN & STEIDL

North Central Fabrication, Ltd.
NORTH CENTRAL FABRICATION
Mansfield, OH 44906
419-529-2744 FAX 419-529-5387 http://www.northcentralfab
AISC CERTIFIED FABRICATOR

DESCRIPTION	DATE	DATE	JOB No.
LINTEL	05/14/2011		70234
	DRAWN BY TMc	CHECKED BY TAN	DRG No. L13

PHASE				
1	2	3	4	5
2	0	0	0	0

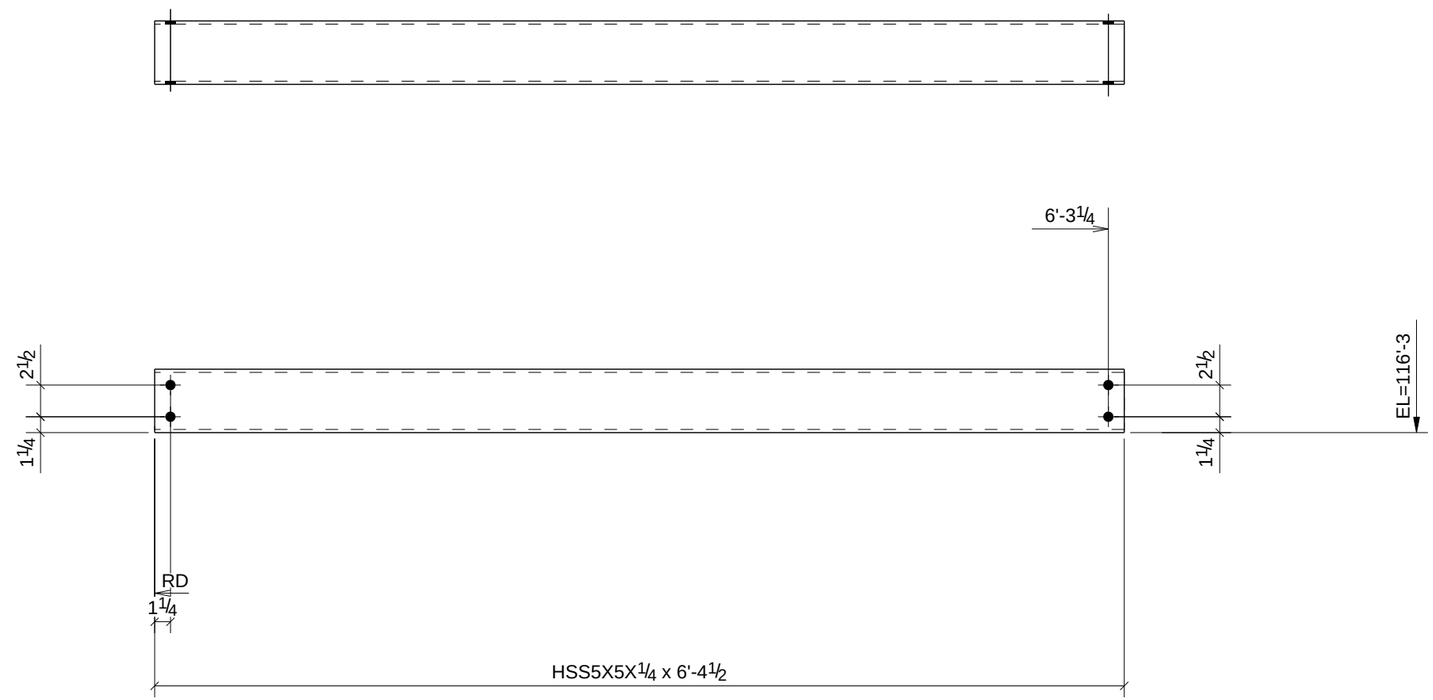

LINTEL TYPE: G / M.O. = 6'-7 / LOC. : (RM 213) / FRAME TYPE: W16

PROCESS CONTROL
PROCESS BY
FAB: _____
FIT AND WELD: _____
INSPECTION: _____
OTHER (IF NEEDED) _____
_____ : _____
_____ : _____
_____ : _____
_____ : _____
_____ : _____
REFERENCE LATEST ERECTION DRAWINGS FOR MATERIAL & FABRICATION INFORMATION

2 - LINTELS - L21

DATE	NO.	DESCRIPTION	BY
5/28/11	B	For Checking	TMc
5/16/11	A	For Approval	TMc

BILL OF MATERIAL

Qty Ea.	Qty Tot	Piece Mark	Description	Length	Weight Total	Remarks	Adv Mill #	Steel Grade
	2	L21	LINTELS					
	2		HSS5X5X1/4	6'-4 1/2"	187	SQ-2 GALVANIZED		A992

STEEL ASTM	A992	UNO
ELECTRODES	E70XX L.H.	UNO
WELDS	1/4" FILLET	UNO
OPEN HOLES	13/16" UNO	FINISH PER SPECS
BOLTS	3/4" A325N	UNO
PAINT	1 S/C STD PRIMER U.N.O.	UNO

PROJECT NAME
OLDE ORCHARD ELEMENTARY SCHOOL
LOCATION
800 McNAUGHTEN RD. COLUMBUS, OHIO 43213
CONTRACTOR
THOMAS AND MARKER CONSTRUCTION
ARCHITECT
BRAUN & STEIDL

North Central Fabrication, Ltd.
NORTH CENTRAL FABRICATION
Mansfield, OH 44906
419-529-2744 FAX 419-529-5387 http://www.northcentralfab
AISC CERTIFIED FABRICATOR

DESCRIPTION	DATE	DATE	JOB No.
LINTEL	05/14/2011		70234
	DRAWN BY TMc	CHECKED BY TAN	DRG No. L21

PHASE				
1	2	3	4	5
2	0	0	0	0

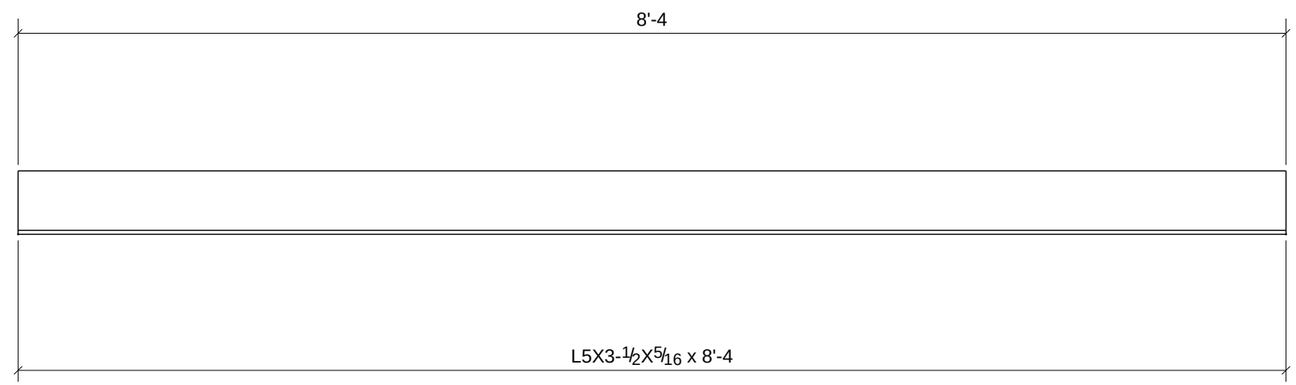

LINTEL TYPE: C2 / M.O. = 7'-0 / LOC. : (RM M242 B & A) / FRAME TYPE: F3

PROCESS CONTROL
PROCESS BY
FAB: _____
FIT AND WELD: _____
INSPECTION: _____
OTHER (IF NEEDED)
_____ : _____
_____ : _____
_____ : _____
_____ : _____
_____ : _____
REFERENCE LATEST ERECTION DRAWINGS FOR MATERIAL & FABRICATION INFORMATION

SHOP NOTE: (LINTEL TYPE INDICATES 2 OR 3 ANGLES FOR EACH LINTEL)

2 - LINTELS - L22

DATE	NO.	DESCRIPTION	BY
5/28/11	B	For Checking	TMc
5/16/11	A	For Approval	TMc

BILL OF MATERIAL

Qty Ea.	Qty Tot	Piece Mark	Description	Length	Weight Total	Remarks	Adv Mill #	Steel Grade
	2	L22	LINTELS					
	2		L5X3-1/2X5/16	8'-4"	145	SQ-2 GALVANIZED		A36

STEEL ASTM	A992	UNO
ELECTRODES	E70XX L.H.	UNO
WELDS	1/4" FILLET	UNO
OPEN HOLES	13/16" UNO	FINISH PER SPECS
BOLTS	3/4" A325N	UNO
PAINT	1 S/C STD PRIMER U.N.O.	UNO

PROJECT NAME
OLDE ORCHARD ELEMENTARY SCHOOL

LOCATION
800 McNAUGHTEN RD. COLUMBUS, OHIO 43213

CONTRACTOR
THOMAS AND MARKER CONSTRUCTION

ARCHITECT
BRAUN & STEIDL

North Central Fabrication, Ltd.

NORTH CENTRAL FABRICATION
Mansfield, OH 44906
419-529-2744 FAX 419-529-5387 http://www.northcentralfab

AISC CERTIFIED FABRICATOR

DESCRIPTION: LINTEL	DATE: 05/14/2011	DATE	JOB No. 70234
	DRAWN BY: TMc	CHECKED BY: TAN	DRG No. L22

PHASE				
1	2	3	4	5
1	0	0	0	0

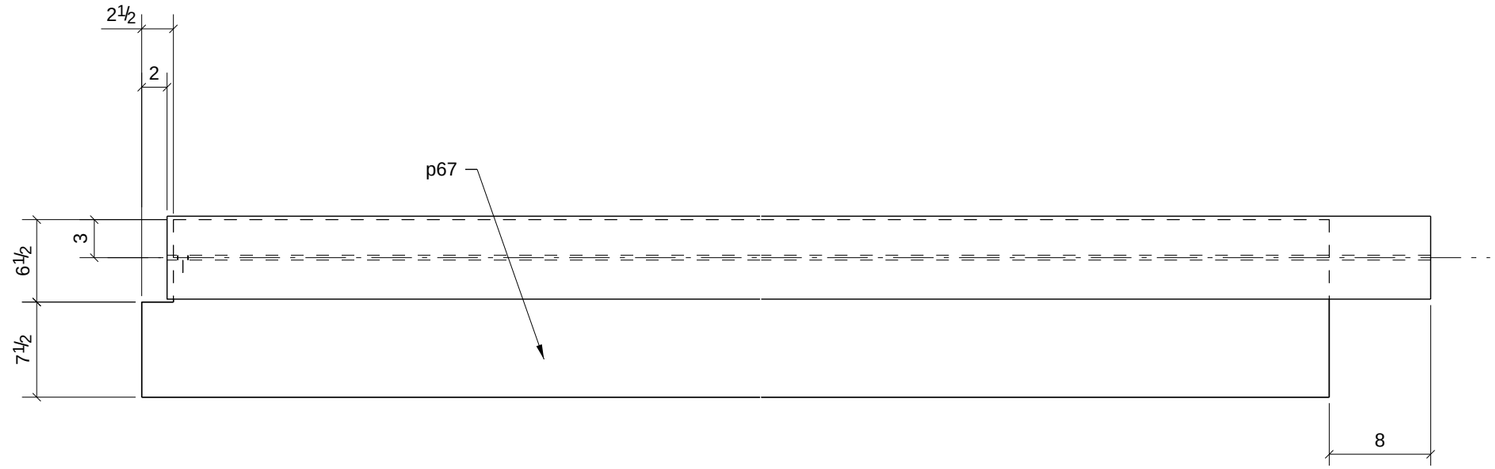

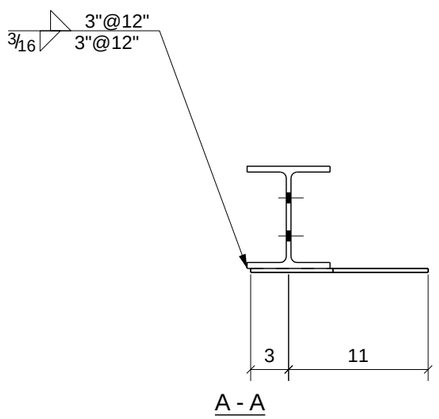

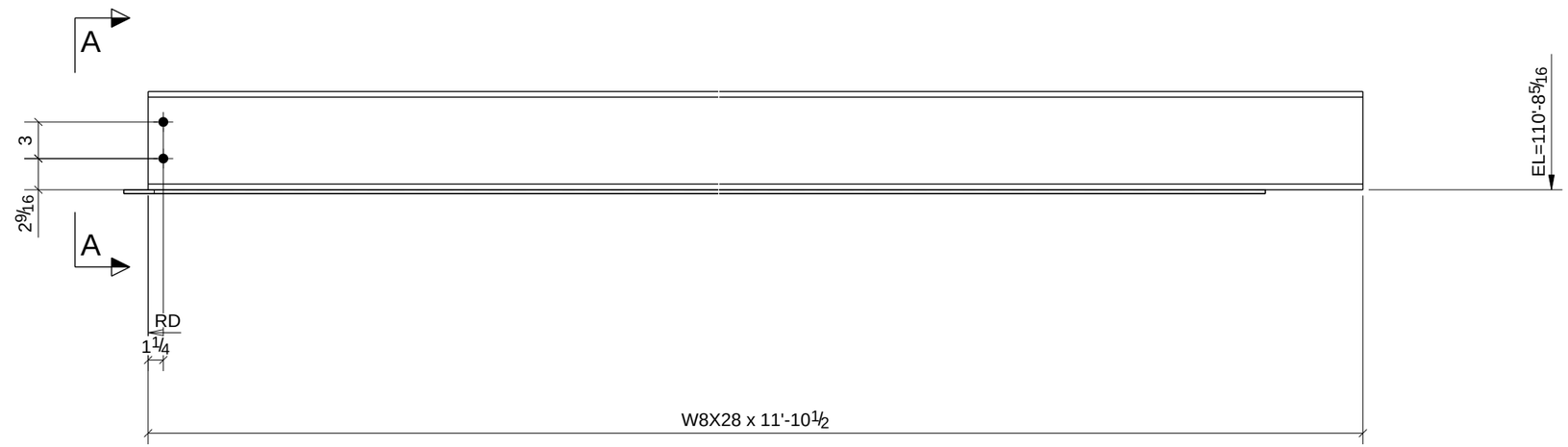

LINTEL TYPE: E / M.O. = 11'-5 / LOC. : (RM 178) / FRAME TYPE: W7
LINTEL TYPE: E / M.O.= 11'-5 /LOC: (RM 156) / FRAME TYPE: W7
LINTEL TYPE: E / M.O.= 11'-5 /LOC: (RM 160) / FRAME TYPE: W7
LINTEL TYPE: E / M.O.= 11'-5 /LOC: (RM 162) / FRAME TYPE: W7
LINTEL TYPE: E / M.O.= 11'-5 /LOC: (RM 170) / FRAME TYPE: W7

PROCESS CONTROL
PROCESS BY
FAB: _____
FIT AND WELD: _____
INSPECTION: _____
OTHER (IF NEEDED) _____
_____ : _____
_____ : _____
_____ : _____
_____ : _____
REFERENCE LATEST ERECTION DRAWINGS FOR MATERIAL & FABRICATION INFORMATION

ONE - LINTEL - L23

W	8 1/16" x 1/4"
F	6 9/16" x 7/16"

DATE	NO.	DESCRIPTION	BY
5/28/11	B	For Checking	TMc
5/16/11	A	For Approval	TMc

BILL OF MATERIAL

Qty Ea.	Qty Tot	Piece Mark	Description	Length	Weight Total	Remarks	Adv Mill #	Steel Grade
	1	L23	LINTEL					
	1		W8X28	11'-10 1/2"	333	SQ-2 GALVANIZED		A992
	2	p67	PL5/16"X14"	11'-4 1/2"	336	GALVANIZED		A36

STEEL ASTM	A992	UNO
ELECTRODES	E70XX L.H.	UNO
WELDS	1/4" FILLET	UNO
OPEN HOLES	13/16" UNO	FINISH PER SPECS
BOLTS	3/4" A325N	UNO
PAINT	1 S/C STD PRIMER U.N.O.	UNO

PROJECT NAME
OLDE ORCHARD ELEMENTARY SCHOOL
LOCATION
800 McNAUGHTEN RD. COLUMBUS, OHIO 43213
CONTRACTOR
THOMAS AND MARKER CONSTRUCTION
ARCHITECT
BRAUN & STEIDL

North Central Fabrication, Ltd.
NORTH CENTRAL FABRICATION
Mansfield, OH 44906
419-529-2744 FAX 419-529-5387 http://www.northcentralfab
AISC CERTIFIED FABRICATOR

DESCRIPTION	DATE	DATE	JOB No.
LINTEL	05/18/2011		70234
	DRAWN BY TMc	CHECKED BY TAN	DRG No. L23

PHASE				
1	2	3	4	5
1	0	0	0	0

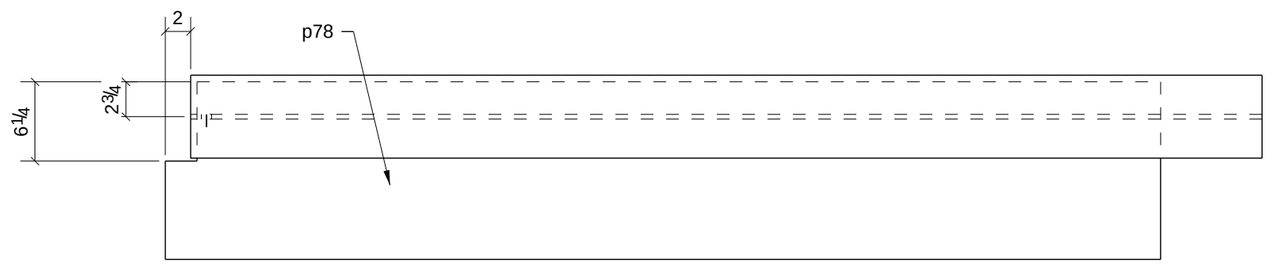

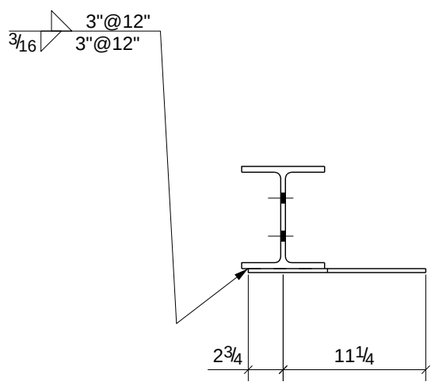

A - A

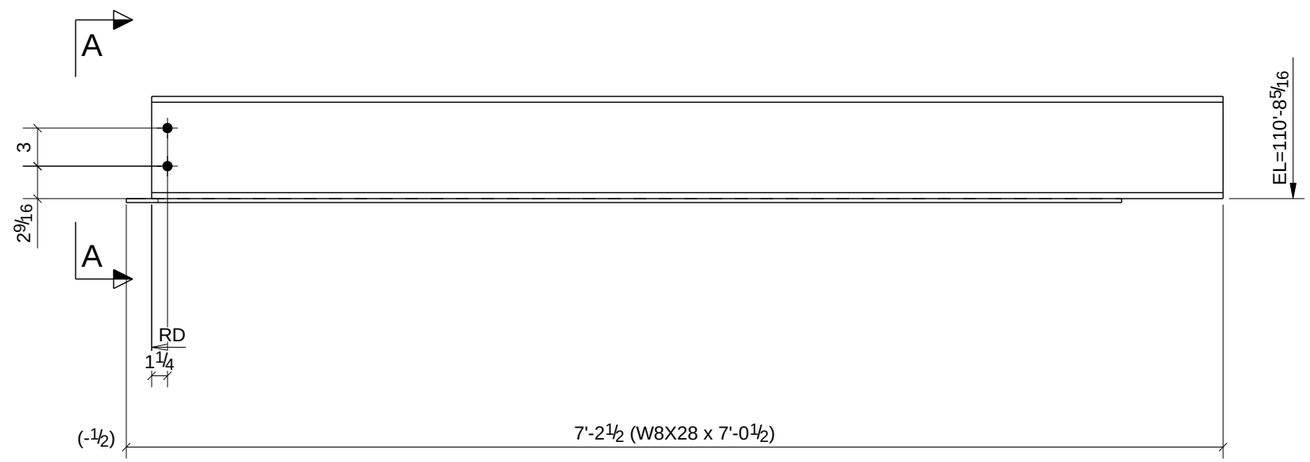

LINTEL TYPE: E / M.O. = 6'-7 / LOC. : (RM 177) / FRAME TYPE: W8

PROCESS CONTROL
PROCESS BY
FAB: _____
FIT AND WELD: _____
INSPECTION: _____
OTHER (IF NEEDED)
_____ : _____
_____ : _____
_____ : _____
_____ : _____
REFERENCE LATEST ERECTION DRAWINGS FOR MATERIAL & FABRICATION INFORMATION

ONE - LINTEL - L24

W	8 1/16" x 1/4"
F	6 9/16" x 7/16"

DATE	NO.	DESCRIPTION	BY
5/28/11	B	For Checking	TMc
5/16/11	A	For Approval	TMc

BILL OF MATERIAL

Qty Ea.	Qty Tot	Piece Mark	Description	Length	Weight Total	Remarks	Adv Mill #	Steel Grade
	1	L24	LINTEL					
	1		W8X28	7'-0 1/2"	197	SQ-2 GALVANIZED		A992
	1	p78	PL5/16"X14"	6'-6 1/2"	96	GALVANIZED		A36

STEEL ASTM	A992	UNO
ELECTRODES	E70XX L.H.	UNO
WELDS	1/4" FILLET	UNO
OPEN HOLES	13/16" UNO	FINISH PER SPECS
BOLTS	3/4" A325N	UNO
PAINT	1 S/C STD PRIMER U.N.O.	UNO

PROJECT NAME
OLDE ORCHARD ELEMENTARY SCHOOL

LOCATION
800 McNAUGHTEN RD. COLUMBUS, OHIO 43213

CONTRACTOR
THOMAS AND MARKER CONSTRUCTION

ARCHITECT
BRAUN & STEIDL

North Central Fabrication, Ltd.
NORTH CENTRAL FABRICATION
Mansfield, OH 44906
419-529-2744 FAX 419-529-5387 http://www.northcentralfab
AISC CERTIFIED FABRICATOR

DESCRIPTION	DATE	DATE	JOB No.
LINTEL	05/14/2011		70234
	DRAWN BY TMc	CHECKED BY TAN	DRG No. L24

PHASE				
1	2	3	4	5
1	0	0	0	0

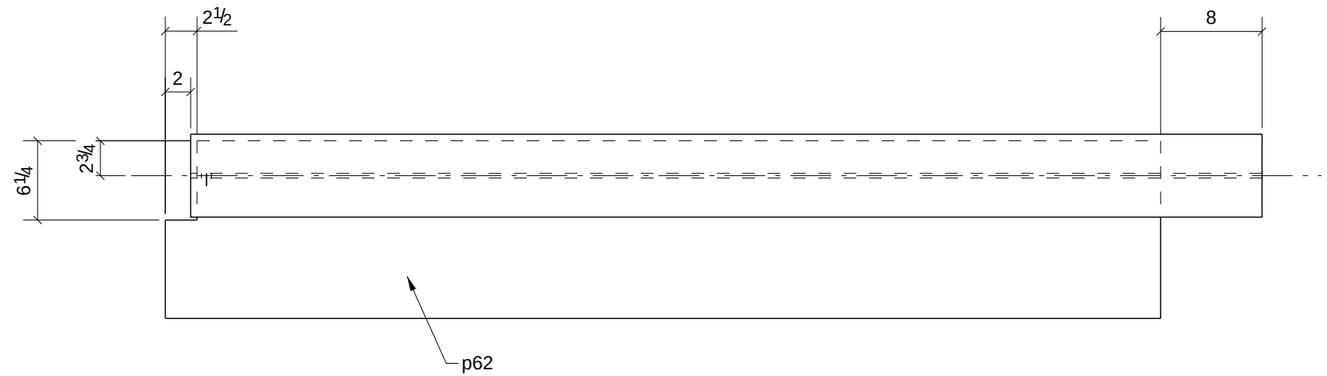

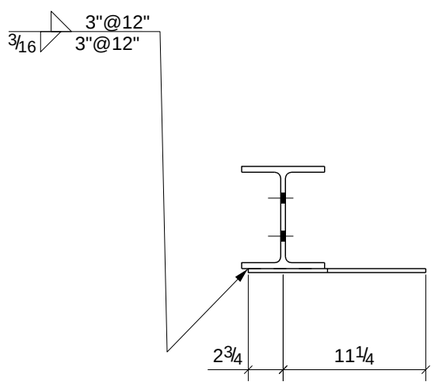

A - A

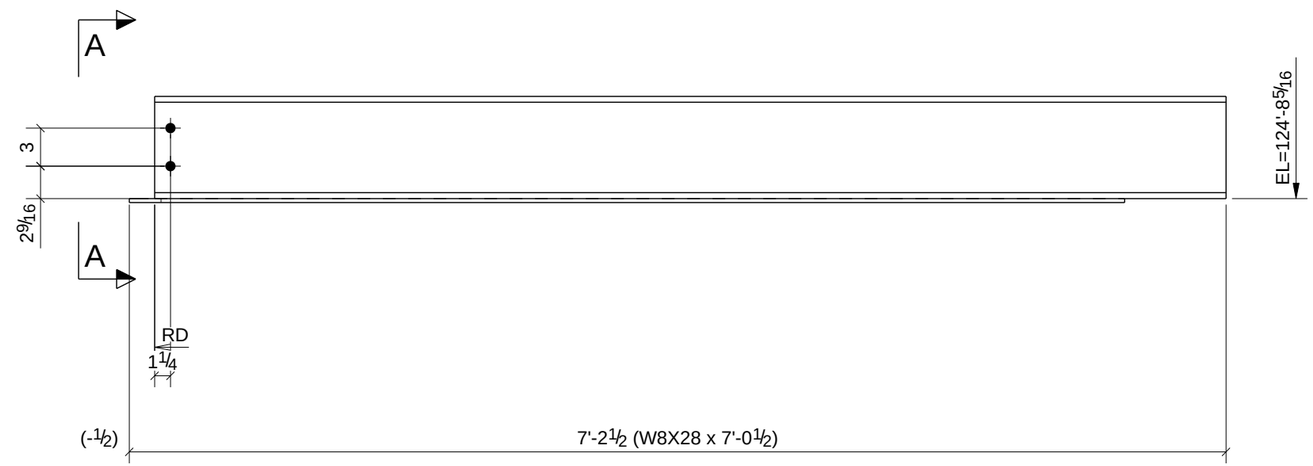

LINTEL TYPE: E / M.O. = 6'-7 / LOC. : (RM 230) / FRAME TYPE: W8

PROCESS CONTROL
PROCESS BY
FAB: _____
FIT AND WELD: _____
INSPECTION: _____
OTHER (IF NEEDED)
_____ : _____
_____ : _____
_____ : _____
_____ : _____
REFERENCE LATEST ERECTION DRAWINGS FOR MATERIAL & FABRICATION INFORMATION

ONE - LINTEL - L25

W	8 1/16" x 1/4"
F	6 9/16" x 7/16"

DATE	NO.	DESCRIPTION	BY
5/28/11	B	For Checking	TMc
5/16/11	A	For Approval	TMc

BILL OF MATERIAL

Qty Ea.	Qty Tot	Piece Mark	Description	Length	Weight Total	Remarks	Adv Mill #	Steel Grade
	1	L25	LINTEL					
	1		W8X28	7'-0 1/2"	197	SQ-2 GALVANIZED		A992
	1	p62	PL5/16"X14"	6'-6 1/2"	96	GALVANIZED		A36

STEEL ASTM	A992	UNO
ELECTRODES	E70XX L.H.	UNO
WELDS	1/4" FILLET	UNO
OPEN HOLES	13/16" UNO	FINISH PER SPECS
BOLTS	3/4" A325N	UNO
PAINT	1 S/C STD PRIMER U.N.O.	UNO

PROJECT NAME
OLDE ORCHARD ELEMENTARY SCHOOL

LOCATION
800 McNAUGHTEN RD. COLUMBUS, OHIO 43213

CONTRACTOR
THOMAS AND MARKER CONSTRUCTION

ARCHITECT
BRAUN & STEIDL

North Central Fabrication, Ltd.
NORTH CENTRAL FABRICATION
Mansfield, OH 44906
419-529-2744 FAX 419-529-5387 http://www.northcentralfab
AISC CERTIFIED FABRICATOR

DESCRIPTION	DATE	DATE	JOB No.
LINTEL	05/14/2011		70234
	DRAWN BY TMc	CHECKED BY TAN	DRG No. L25

PHASE				
1	2	3	4	5
1	0	0	0	0

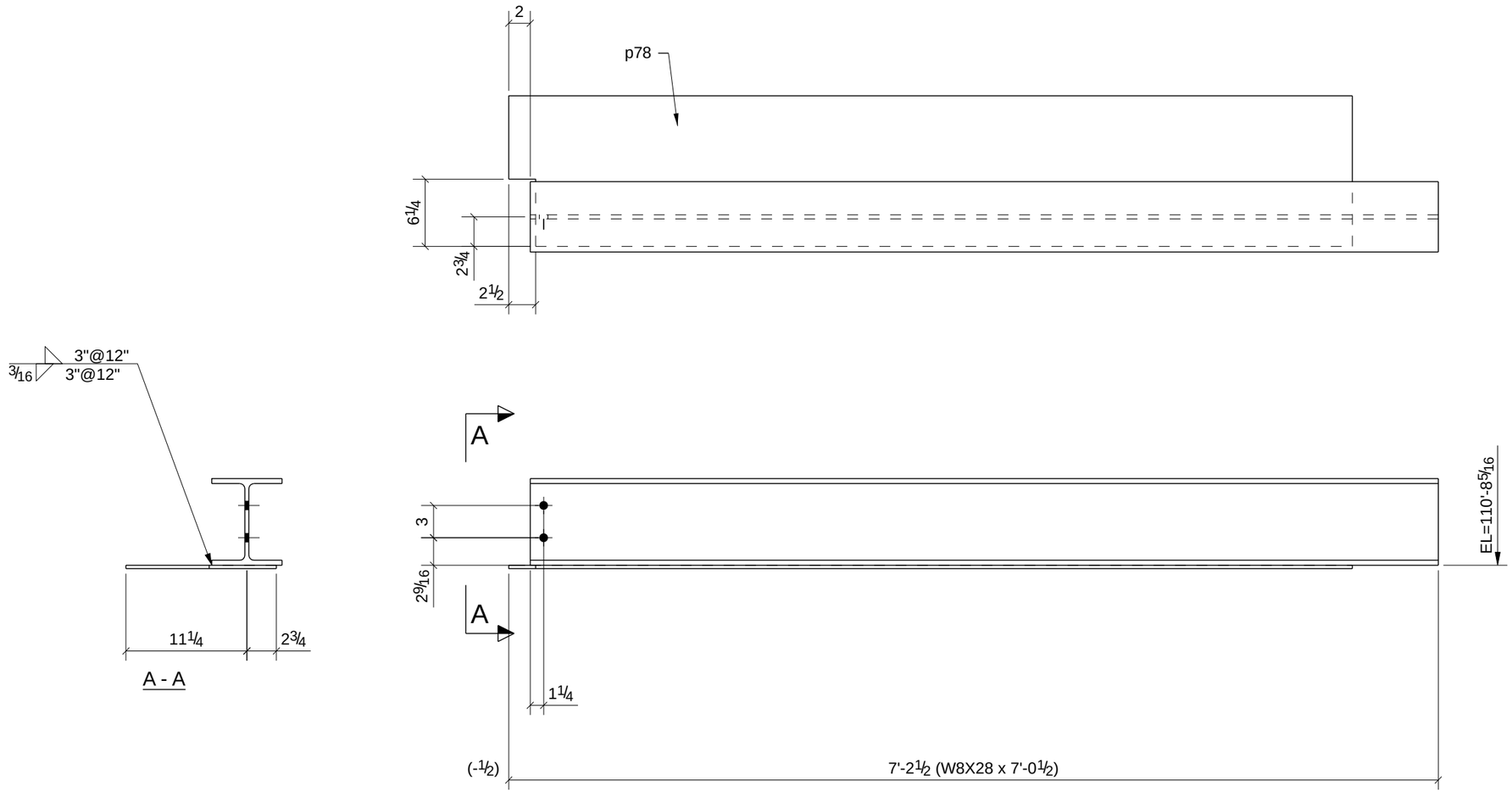

LINTEL TYPE: E / M.O. = 6'-7 / LOC. : (RM 180) / FRAME TYPE: W8

PROCESS CONTROL
PROCESS BY
FAB: _____
FIT AND WELD: _____
INSPECTION: _____
OTHER (IF NEEDED) _____
_____ : _____
_____ : _____
_____ : _____
_____ : _____
_____ : _____
REFERENCE LATEST ERECTION DRAWINGS FOR MATERIAL & FABRICATION INFORMATION

ONE - LINTEL - L26

W	8 1/16" x 1/4"
F	6 9/16" x 7/16"

DATE	NO.	DESCRIPTION	BY
5/28/11	B	For Checking	TMc
5/16/11	A	For Approval	TMc

BILL OF MATERIAL

Qty Ea.	Qty Tot	Piece Mark	Description	Length	Weight Total	Remarks	Adv Mill #	Steel Grade
	1	L26	LINTEL					
	1		W8X28	7'-0 1/2"	197	SQ-2 GALVANIZED		A992
	1	p78	PL5/16"X14"	6'-6 1/2"	96	GALVANIZED		A36

STEEL ASTM	A992	UNO
ELECTRODES	E70XX L.H.	UNO
WELDS	1/4" FILLET	UNO
OPEN HOLES	13/16" UNO	FINISH PER SPECS
BOLTS	3/4" A325N	UNO
PAINT	1 S/C STD PRIMER U.N.O.	UNO

PROJECT NAME
OLDE ORCHARD ELEMENTARY SCHOOL
LOCATION
800 McNAUGHTEN RD. COLUMBUS, OHIO 43213
CONTRACTOR
THOMAS AND MARKER CONSTRUCTION
ARCHITECT
BRAUN & STEIDL

North Central Fabrication, Ltd.
NORTH CENTRAL FABRICATION
Mansfield, OH 44906
419-529-2744 FAX 419-529-5387 http://www.northcentralfab
AISC CERTIFIED FABRICATOR

DESCRIPTION	DATE	DATE	JOB No.
LINTEL	05/14/2011		70234
	DRAWN BY TMc	CHECKED BY TAN	DRG No. L26

PHASE				
1	2	3	4	5
1	0	0	0	0

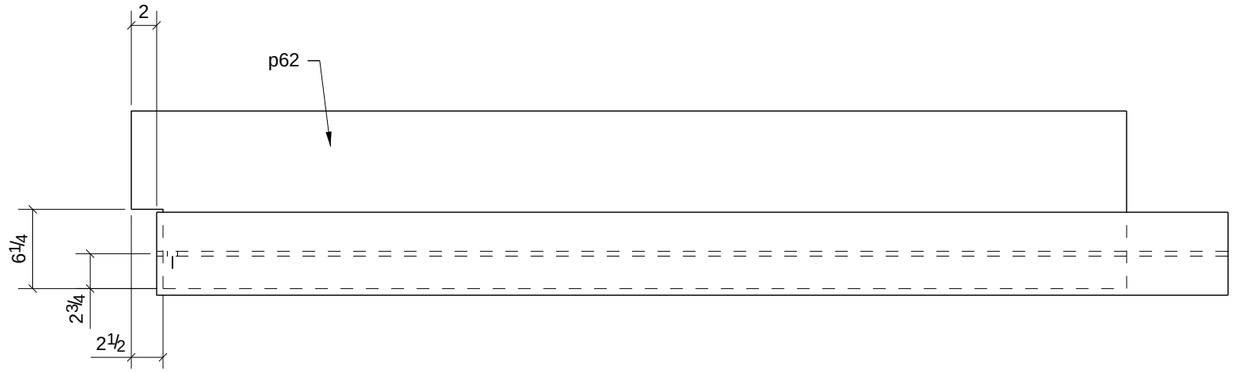

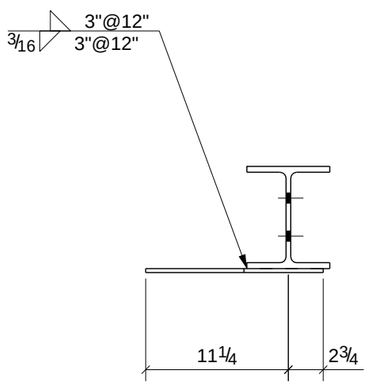

A - A

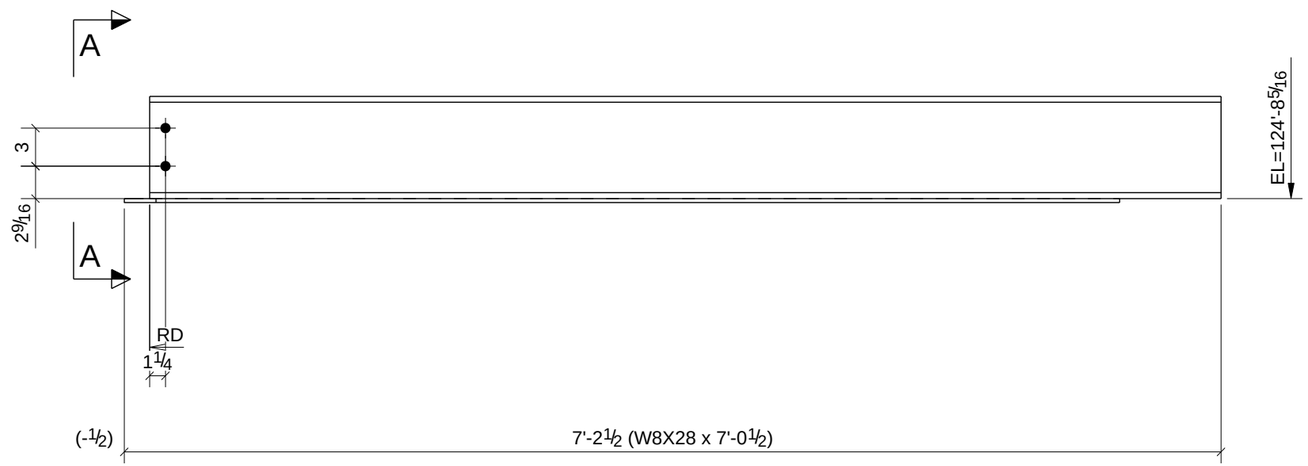

LINTEL TYPE: E / M.O. = 6'-7 / LOC. : (RM 233) / FRAME TYPE: W14

PROCESS CONTROL
PROCESS BY
FAB: _____
FIT AND WELD: _____
INSPECTION: _____
OTHER (IF NEEDED)
_____ : _____
_____ : _____
_____ : _____
_____ : _____
REFERENCE LATEST ERECTION DRAWINGS FOR MATERIAL & FABRICATION INFORMATION

ONE - LINTEL - L27

W	8 1/16" x 1/4"
F	6 9/16" x 7/16"

DATE	NO.	DESCRIPTION	BY
5/28/11	B	For Checking	TMc
5/16/11	A	For Approval	TMc

BILL OF MATERIAL

Qty Ea.	Qty Tot	Piece Mark	Description	Length	Weight Total	Remarks	Adv Mill #	Steel Grade
	1	L27	LINTEL					
	1		W8X28	7'-0 1/2"	197	SQ-2 GALVANIZED		A992
	1	p62	PL5/16"X14"	6'-6 1/2"	96	GALVANIZED		A36

STEEL ASTM	A992	UNO
ELECTRODES	E70XX L.H.	UNO
WELDS	1/4" FILLET	UNO
OPEN HOLES	13/16" UNO	FINISH PER SPECS
BOLTS	3/4" A325N	UNO
PAINT	1 S/C STD PRIMER U.N.O.	UNO

PROJECT NAME
OLDE ORCHARD ELEMENTARY SCHOOL

LOCATION
800 McNAUGHTEN RD. COLUMBUS, OHIO 43213

CONTRACTOR
THOMAS AND MARKER CONSTRUCTION

ARCHITECT
BRAUN & STEIDL

North Central Fabrication, Ltd.
NORTH CENTRAL FABRICATION
Mansfield, OH 44906
419-529-2744 FAX 419-529-5387 http://www.northcentralfab
AISC CERTIFIED FABRICATOR

DESCRIPTION	DATE	DATE	JOB No.
LINTEL	05/14/2011		70234
	DRAWN BY TMc	CHECKED BY TAN	DRG No. L27

PHASE				
1	2	3	4	5
9	0	0	0	0

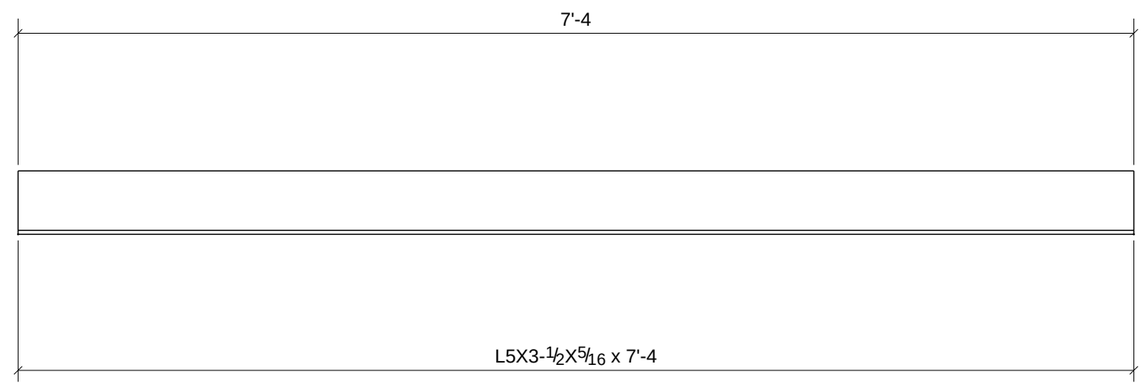

LINTEL TYPE: C3 / M.O. = 6'-0 / LOC. : (RM 184T) / FRAME TYPE: W6

LINTEL TYPE: C3 / M.O.= 6'-0 /LOC: (RM 181T) / FRAME TYPE: W6
LINTEL TYPE: C3 / M.O.= 6'-0 /LOC: (RM 232T) / FRAME TYPE: W6

PROCESS CONTROL
PROCESS BY
FAB: _____
FIT AND WELD: _____
INSPECTION: _____
OTHER (IF NEEDED)
_____ : _____
_____ : _____
_____ : _____
_____ : _____
_____ : _____
REFERENCE LATEST ERECTION DRAWINGS FOR MATERIAL & FABRICATION INFORMATION

SHOP NOTE: (LINTEL TYPE INDICATES 2 OR 3 ANGLES FOR EACH LINTEL)

9 - LINTELS - L30

DATE	NO.	DESCRIPTION	BY
5/28/11	B	For Checking	TMc
5/16/11	A	For Approval	TMc

BILL OF MATERIAL

Qty Ea.	Qty Tot	Piece Mark	Description	Length	Weight Total	Remarks	Adv Mill #	Steel Grade
	9	L30	LINTELS					
	9		L5X3-1/2X5/16	7'-4"	575	SQ-2 GALVANIZED		A36

STEEL ASTM	A992	UNO
ELECTRODES	E70XX L.H.	UNO
WELDS	1/4" FILLET	UNO
OPEN HOLES	13/16" UNO	FINISH PER SPECS
BOLTS	3/4" A325N	UNO
PAINT	1 S/C STD PRIMER U.N.O.	UNO

PROJECT NAME
OLDE ORCHARD ELEMENTARY SCHOOL

LOCATION
800 McNAUGHTEN RD. COLUMBUS, OHIO 43213

CONTRACTOR
THOMAS AND MARKER CONSTRUCTION

ARCHITECT
BRAUN & STEIDL

North Central Fabrication, Ltd.
NORTH CENTRAL FABRICATION
Mansfield, OH 44906
419-529-2744 FAX 419-529-5387 http://www.northcentralfab
AISC CERTIFIED FABRICATOR

DESCRIPTION	DATE	DATE	JOB No.
LINTEL	05/14/2011		70234
	DRAWN BY TMc	CHECKED BY TAN	DRG No. L30

PHASE				
1	2	3	4	5
2	0	0	0	0

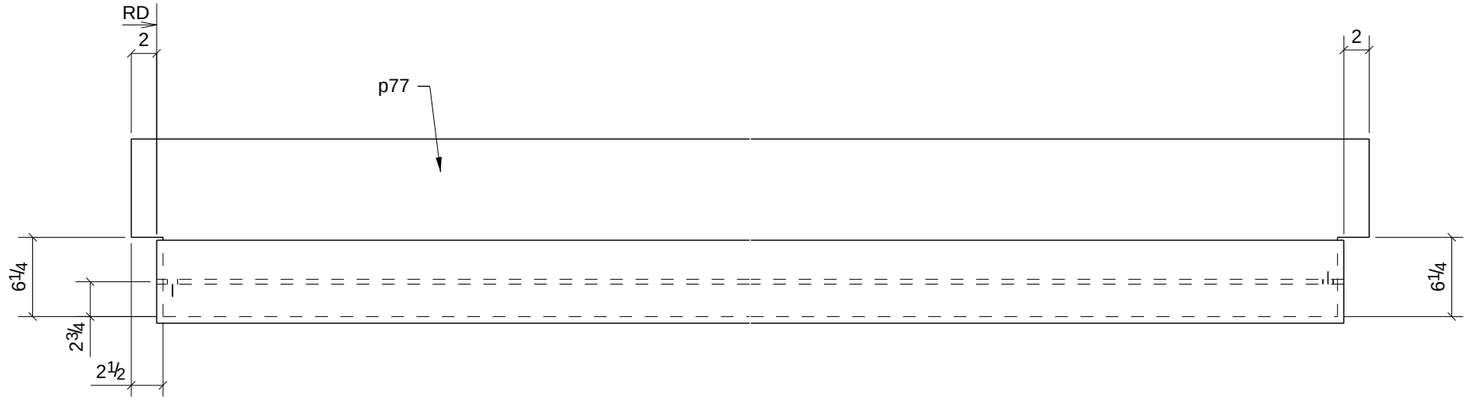

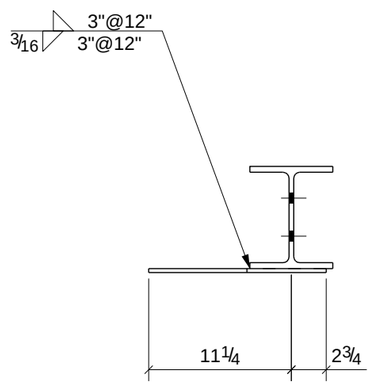

A - A

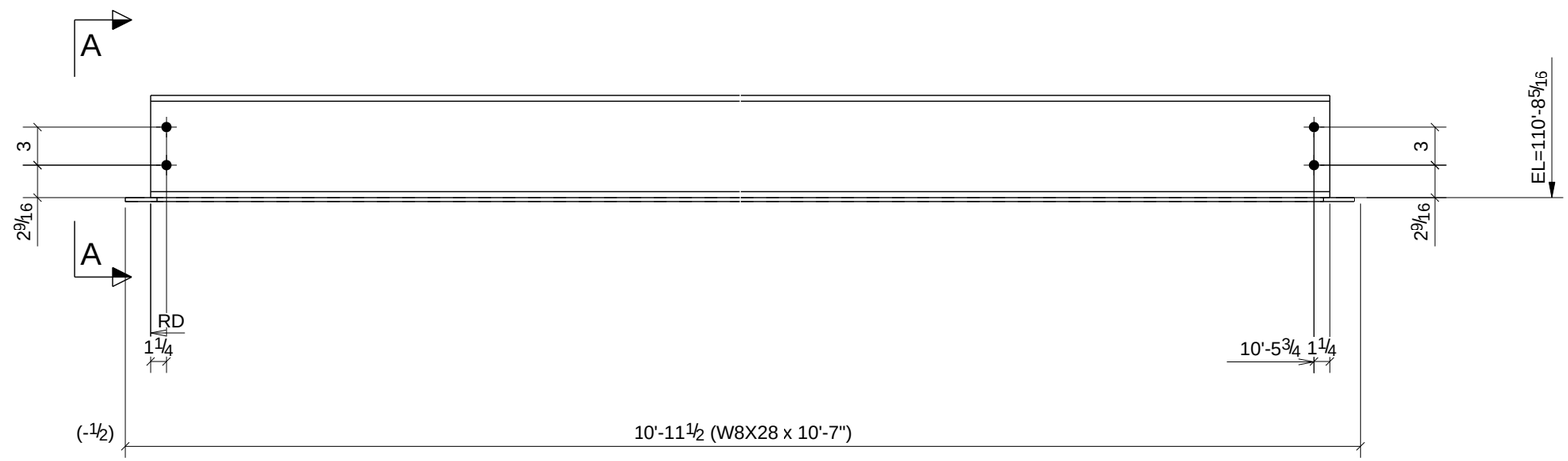

LINTEL TYPE: E / M.O. = 11'-0 / LOC. : (RM 180) / FRAME TYPE: W8

LINTEL TYPE: E / M.O.= 11'-0 /LOC: (RM 177) / FRAME TYPE: W8

PROCESS CONTROL
PROCESS BY
FAB: _____
FIT AND WELD: _____
INSPECTION: _____
OTHER (IF NEEDED)
_____ : _____
_____ : _____
_____ : _____
_____ : _____
REFERENCE LATEST ERECTION DRAWINGS FOR MATERIAL & FABRICATION INFORMATION

2 - LINTELS - L31

W	8 1/16" x 1/4"
F	6 9/16" x 7/16"

DATE	NO.	DESCRIPTION	BY
5/28/11	B	For Checking	TMc
5/16/11	A	For Approval	TMc

BILL OF MATERIAL

Qty Ea.	Qty Tot	Piece Mark	Description	Length	Weight Total	Remarks	Adv Mill #	Steel Grade
	2	L31	LINTELS					
	2		W8X28	10'-7"	594	SQ-2 GALVANIZED		A992
	2	p77	PL5/16"X14"	10'-11"	320	GALVANIZED		A36

STEEL ASTM	A992	UNO
ELECTRODES	E70XX L.H.	UNO
WELDS	1/4" FILLET	UNO
OPEN HOLES	13/16" UNO	FINISH PER SPECS
BOLTS	3/4" A325N	UNO
PAINT	1 S/C STD PRIMER U.N.O.	UNO

PROJECT NAME
OLDE ORCHARD ELEMENTARY SCHOOL

LOCATION
800 McNAUGHTEN RD. COLUMBUS, OHIO 43213

CONTRACTOR
THOMAS AND MARKER CONSTRUCTION

ARCHITECT
BRAUN & STEIDL

North Central Fabrication, Ltd.
NORTH CENTRAL FABRICATION
Mansfield, OH 44906
419-529-2744 FAX 419-529-5387 http://www.northcentralfab
AISC CERTIFIED FABRICATOR

DESCRIPTION	DATE	DATE	JOB No.
LINTEL	05/14/2011		70234
	DRAWN BY TMc	CHECKED BY TAN	DRG No. L31

PHASE				
1	2	3	4	5
2	0	0	0	0

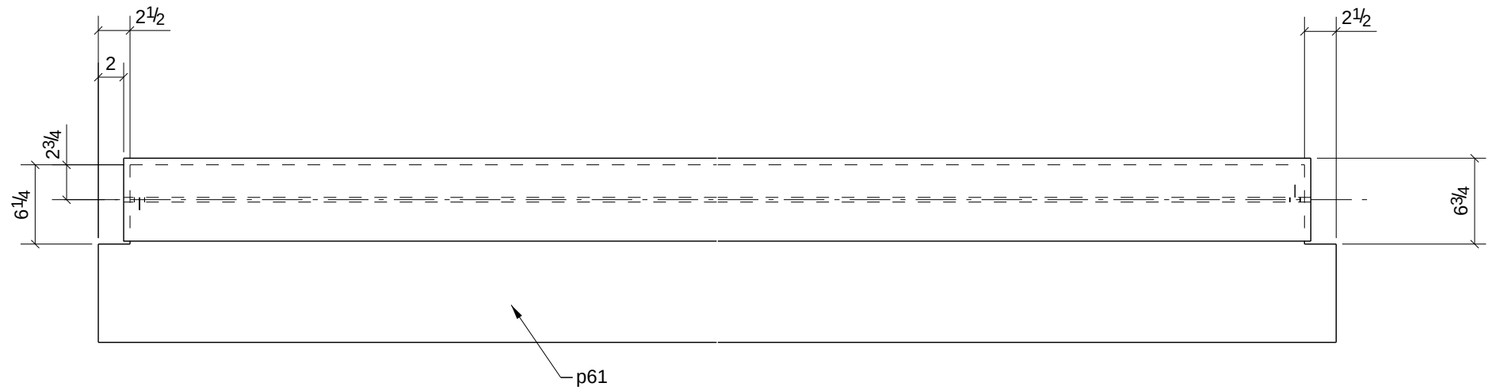

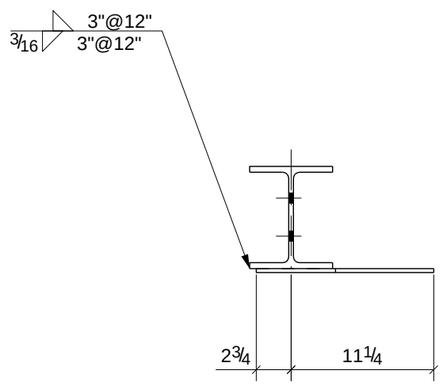

A - A

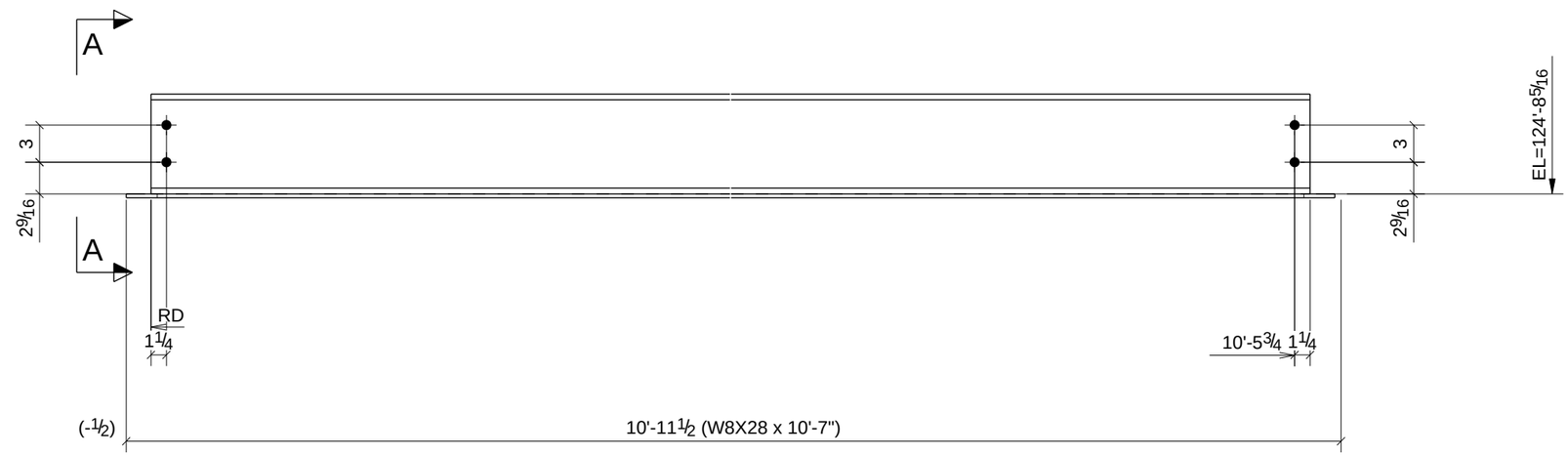

LINTEL TYPE: E / M.O. = 11'-0 / LOC. : (RM 230) / FRAME TYPE: W8

LINTEL TYPE: E / M.O.= 11'-0 /LOC: (RM 233) / FRAME TYPE: W8

PROCESS CONTROL
PROCESS BY
FAB: _____
FIT AND WELD: _____
INSPECTION: _____
OTHER (IF NEEDED)
_____ : _____
_____ : _____
_____ : _____
_____ : _____
REFERENCE LATEST ERECTION DRAWINGS FOR MATERIAL & FABRICATION INFORMATION

2 - LINTELS - L33

W	8 1/16" x 1/4"
F	6 9/16" x 7/16"

DATE	NO.	DESCRIPTION	BY
5/28/11	B	For Checking	TMc
5/16/11	A	For Approval	TMc

BILL OF MATERIAL

Qty Ea.	Qty Tot	Piece Mark	Description	Length	Weight Total	Remarks	Adv Mill #	Steel Grade
	2	L33	LINTELS					
	2		W8X28	10'-7"	594	SQ-2 GALVANIZED		A992
	2	p61	PL5/16"X14"	10'-11"	320	GALVANIZED		A36

STEEL ASTM	A992		UNO
ELECTRODES	E70XX L.H.		UNO
WELDS	1/4" FILLET		UNO
OPEN HOLES	13/16"	UNO	FINISH PER SPECS
BOLTS	3/4" A325N		UNO
PAINT	1 S/C STD PRIMER U.N.O.		UNO

PROJECT NAME
OLDE ORCHARD ELEMENTARY SCHOOL

LOCATION
800 McNAUGHTEN RD. COLUMBUS, OHIO 43213

CONTRACTOR
THOMAS AND MARKER CONSTRUCTION

ARCHITECT
BRAUN & STEIDL

North Central Fabrication, Ltd.
NORTH CENTRAL FABRICATION
Mansfield, OH 44906
419-529-2744 FAX 419-529-5387 http://www.northcentralfab
AISC CERTIFIED FABRICATOR

DESCRIPTION	DATE	DATE	JOB No.
LINTEL	05/14/2011		70234
	DRAWN BY TMc	CHECKED BY TAN	DRG No. L33

PHASE				
1	2	3	4	5
1	0	0	0	0

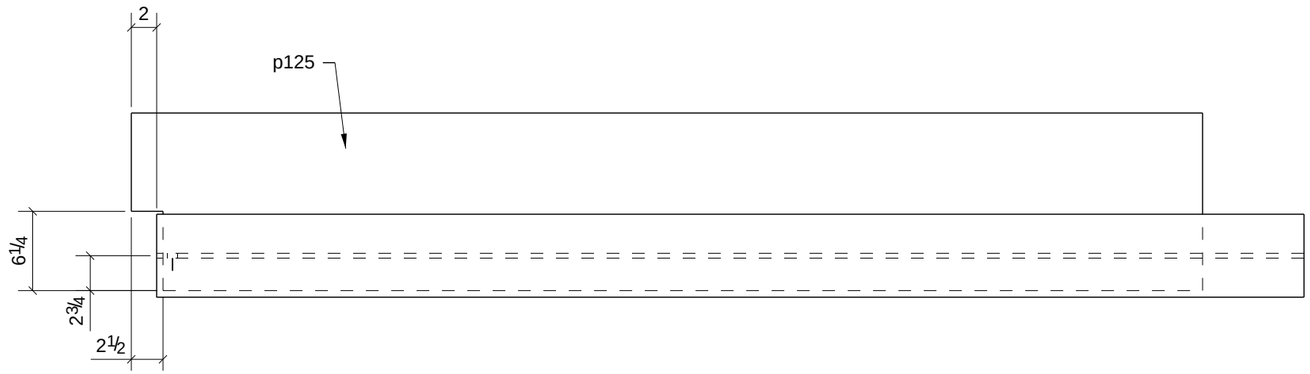

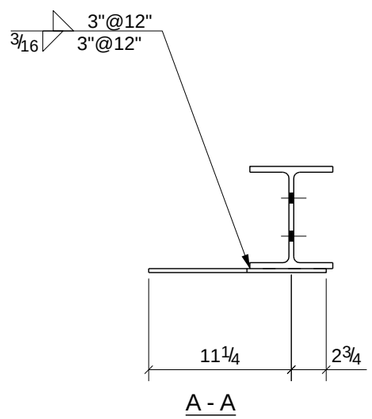

LINTEL TYPE: E / M.O. = 7'-1 / LOC. : (RM 177) / FRAME TYPE: W8

PROCESS CONTROL
PROCESS BY
FAB: _____
FIT AND WELD: _____
INSPECTION: _____
OTHER (IF NEEDED) _____
_____ : _____
_____ : _____
_____ : _____
_____ : _____
_____ : _____
REFERENCE LATEST ERECTION DRAWINGS FOR MATERIAL & FABRICATION INFORMATION

ONE - LINTEL - L34

W	8 1/16" x 1/4"
F	6 9/16" x 7/16"

DATE	NO.	DESCRIPTION	BY
5/28/11	B	For Checking	TMc
5/16/11	A	For Approval	TMc

BILL OF MATERIAL

Qty Ea.	Qty Tot	Piece Mark	Description	Length	Weight Total	Remarks	Adv Mill #	Steel Grade
	1	L34	LINTEL					
	1		W8X28	7'-6 1/2"	211	SQ-2 GALVANIZED		A992
	1	p125	PL5/16"X14"	7'-0 1/2"	103	GALVANIZED		A36

STEEL ASTM	A992	UNO
ELECTRODES	E70XX L.H.	UNO
WELDS	1/4" FILLET	UNO
OPEN HOLES	13/16" UNO	FINISH PER SPECS
BOLTS	3/4" A325N	UNO
PAINT	1 S/C STD PRIMER U.N.O.	UNO

PROJECT NAME
OLDE ORCHARD ELEMENTARY SCHOOL
LOCATION
800 McNAUGHTEN RD. COLUMBUS, OHIO 43213
CONTRACTOR
THOMAS AND MARKER CONSTRUCTION
ARCHITECT
BRAUN & STEIDL

North Central Fabrication, Ltd.
NORTH CENTRAL FABRICATION
Mansfield, OH 44906
419-529-2744 FAX 419-529-5387 http://www.northcentralfab
AISC CERTIFIED FABRICATOR

DESCRIPTION	DATE	DATE	JOB No.
LINTEL	05/14/2011		70234
	DRAWN BY TMc	CHECKED BY TAN	DRG No. L34

PHASE				
1	2	3	4	5
1	0	0	0	0

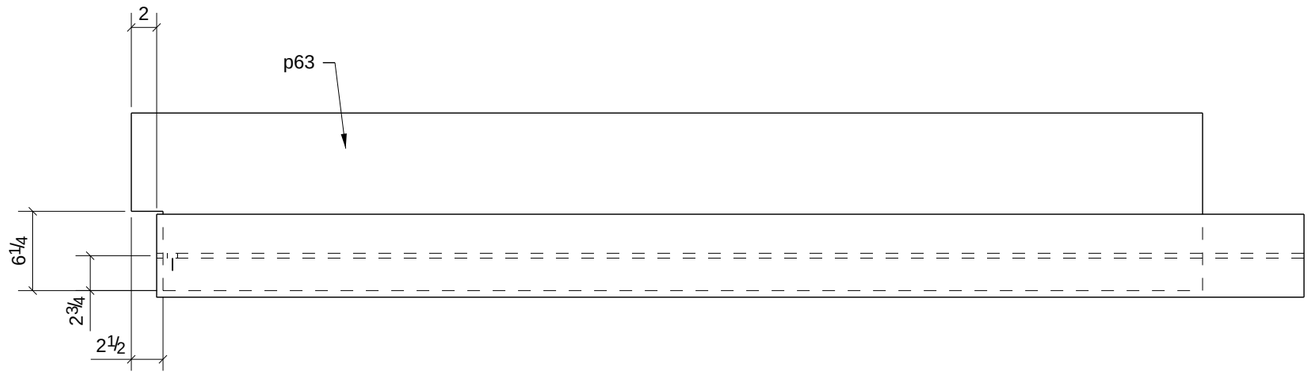

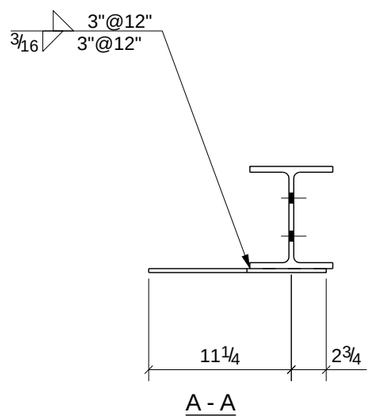

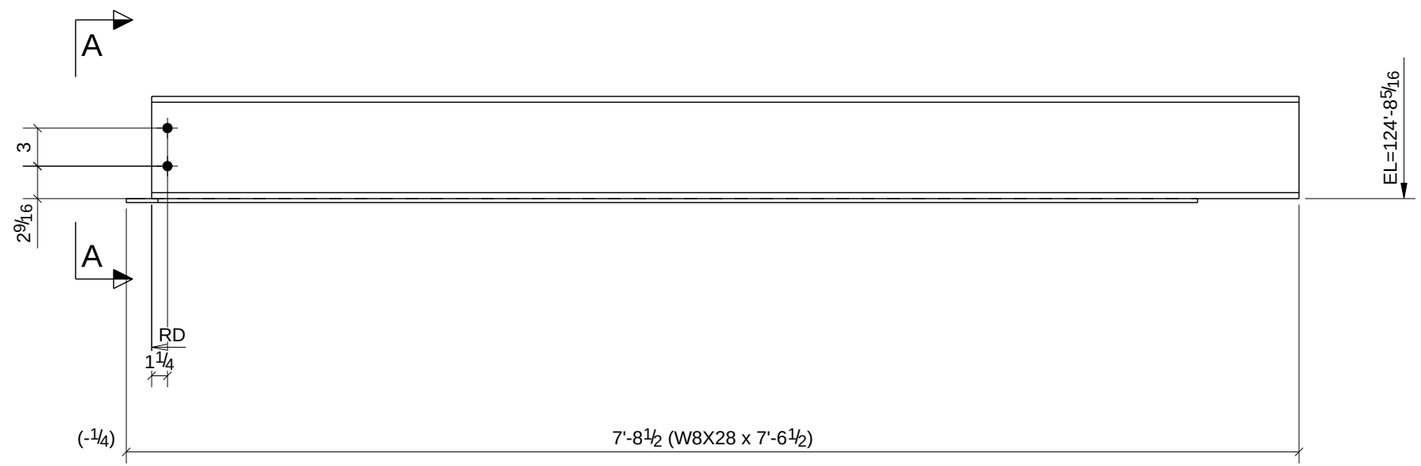

LINTEL TYPE: E / M.O. = 7'-1 / LOC. : (RM 230) / FRAME TYPE: W8

PROCESS CONTROL
PROCESS BY
FAB: _____
FIT AND WELD: _____
INSPECTION: _____
OTHER (IF NEEDED) _____
_____ : _____
_____ : _____
_____ : _____
_____ : _____
_____ : _____
REFERENCE LATEST ERECTION DRAWINGS FOR MATERIAL & FABRICATION INFORMATION

ONE - LINTEL - L35

W	8 1/16" x 1/4"
F	6 9/16" x 7/16"

DATE	NO.	DESCRIPTION	BY
5/28/11	B	For Checking	TMc
5/16/11	A	For Approval	TMc

BILL OF MATERIAL

Qty Ea.	Qty Tot	Piece Mark	Description	Length	Weight Total	Remarks	Adv Mill #	Steel Grade
	1	L35	LINTEL					
	1		W8X28	7'-6 1/2"	211	SQ-2 GALVANIZED		A992
	1	p63	PL5/16"X14"	7'-0 1/2"	103	GALVANIZED		A36

STEEL ASTM	A992	UNO
ELECTRODES	E70XX L.H.	UNO
WELDS	1/4" FILLET	UNO
OPEN HOLES	13/16" UNO	FINISH PER SPECS
BOLTS	3/4" A325N	UNO
PAINT	1 S/C STD PRIMER U.N.O.	UNO

PROJECT NAME
OLDE ORCHARD ELEMENTARY SCHOOL
LOCATION
800 McNAUGHTEN RD. COLUMBUS, OHIO 43213
CONTRACTOR
THOMAS AND MARKER CONSTRUCTION
ARCHITECT
BRAUN & STEIDL

North Central Fabrication, Ltd.
NORTH CENTRAL FABRICATION
Mansfield, OH 44906
419-529-2744 FAX 419-529-5387 http://www.northcentralfab
AISC CERTIFIED FABRICATOR

DESCRIPTION	DATE	DATE	JOB No.
LINTEL	05/14/2011		70234
	DRAWN BY TMc	CHECKED BY TAN	DRG No. L35

PHASE				
1	2	3	4	5
1	0	0	0	0

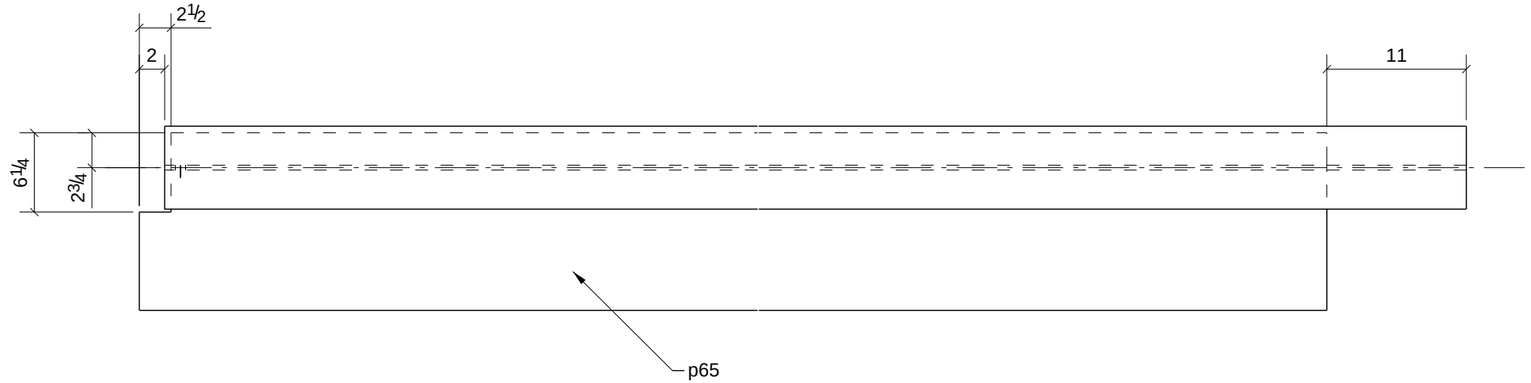

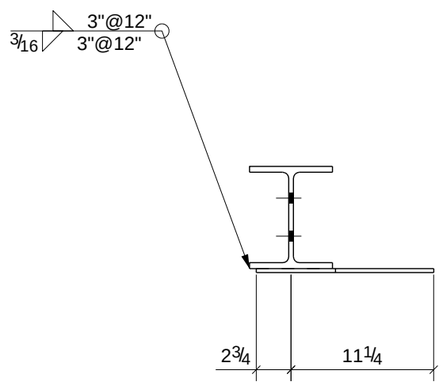

A - A

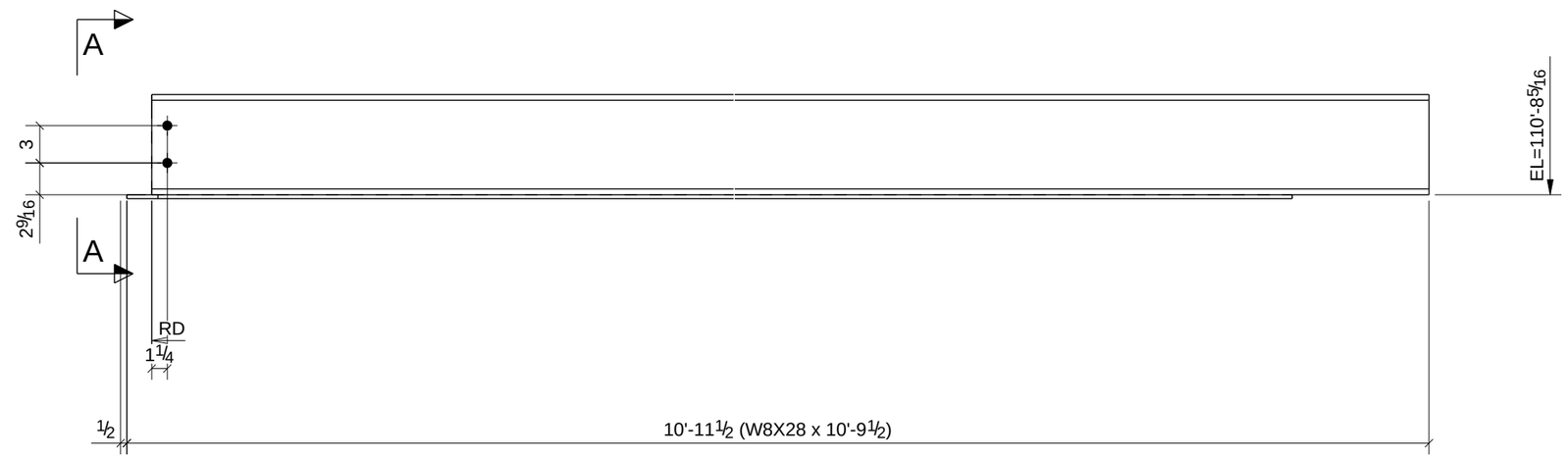

LINTEL TYPE: E / M.O. = 7'-1 / LOC. : (RM 180) / FRAME TYPE: W8

PROCESS CONTROL
PROCESS BY
FAB: _____
FIT AND WELD: _____
INSPECTION: _____
OTHER (IF NEEDED)
_____ : _____
_____ : _____
_____ : _____
_____ : _____
_____ : _____
REFERENCE LATEST ERECTION DRAWINGS FOR MATERIAL & FABRICATION INFORMATION

ONE - LINTEL - L36

W	8 1/16" x 1/4"
F	6 9/16" x 7/16"

DATE	NO.	DESCRIPTION	BY
5/28/11	B	For Checking	TMc
5/16/11	A	For Approval	TMc

BILL OF MATERIAL

Qty Ea.	Qty Tot	Piece Mark	Description	Length	Weight Total	Remarks	Adv Mill #	Steel Grade
	1	L36	LINTEL					
	1		W8X28	10'-9 1/2"	303	SQ-2 GALVANIZED		A992
	1	p65	PL5/16"X14"	10'-0 1/2"	148	GALVANIZED		A36

STEEL ASTM	A992	UNO
ELECTRODES	E70XX L.H.	UNO
WELDS	1/4" FILLET	UNO
OPEN HOLES	13/16" UNO	FINISH PER SPECS
BOLTS	3/4" A325N	UNO
PAINT	1 S/C STD PRIMER U.N.O.	UNO

PROJECT NAME
OLDE ORCHARD ELEMENTARY SCHOOL

LOCATION
800 McNAUGHTEN RD. COLUMBUS, OHIO 43213

CONTRACTOR
THOMAS AND MARKER CONSTRUCTION

ARCHITECT
BRAUN & STEIDL

North Central Fabrication, Ltd.
NORTH CENTRAL FABRICATION
Mansfield, OH 44906
419-529-2744 FAX 419-529-5387 http://www.northcentralfab
AISC CERTIFIED FABRICATOR

DESCRIPTION	DATE	DATE	JOB No.
LINTEL	05/14/2011		70234
	DRAWN BY TMc	CHECKED BY TAN	DRG No. L36

PHASE				
1	2	3	4	5
1	0	0	0	0

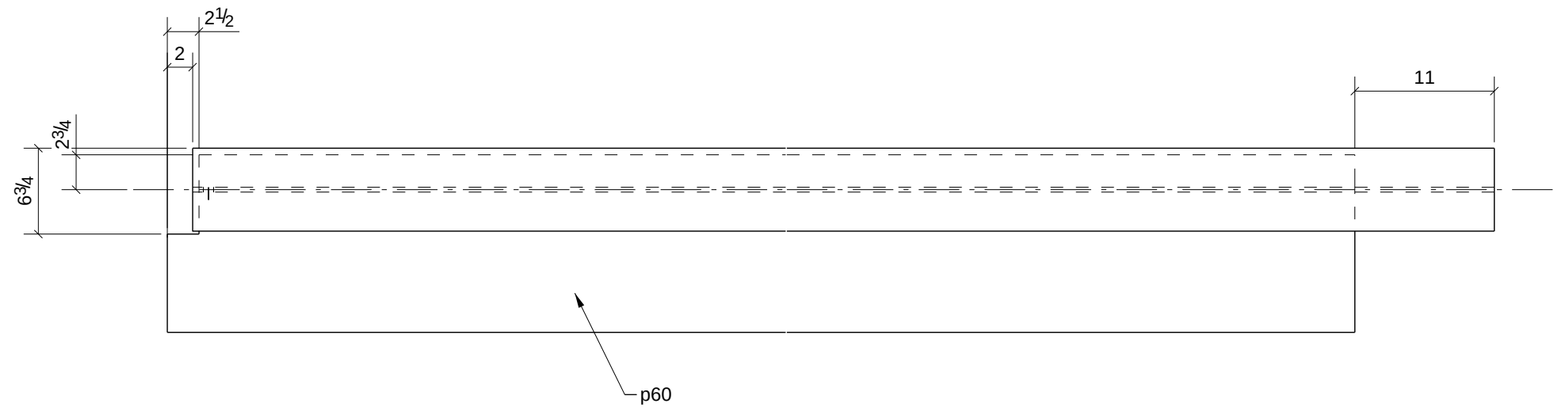

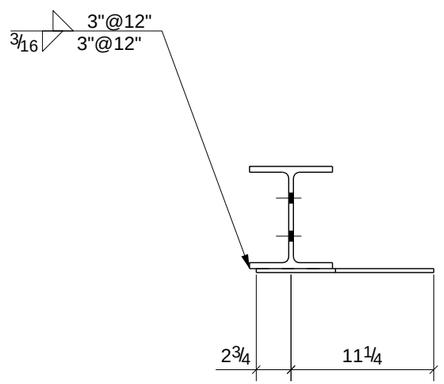

A - A

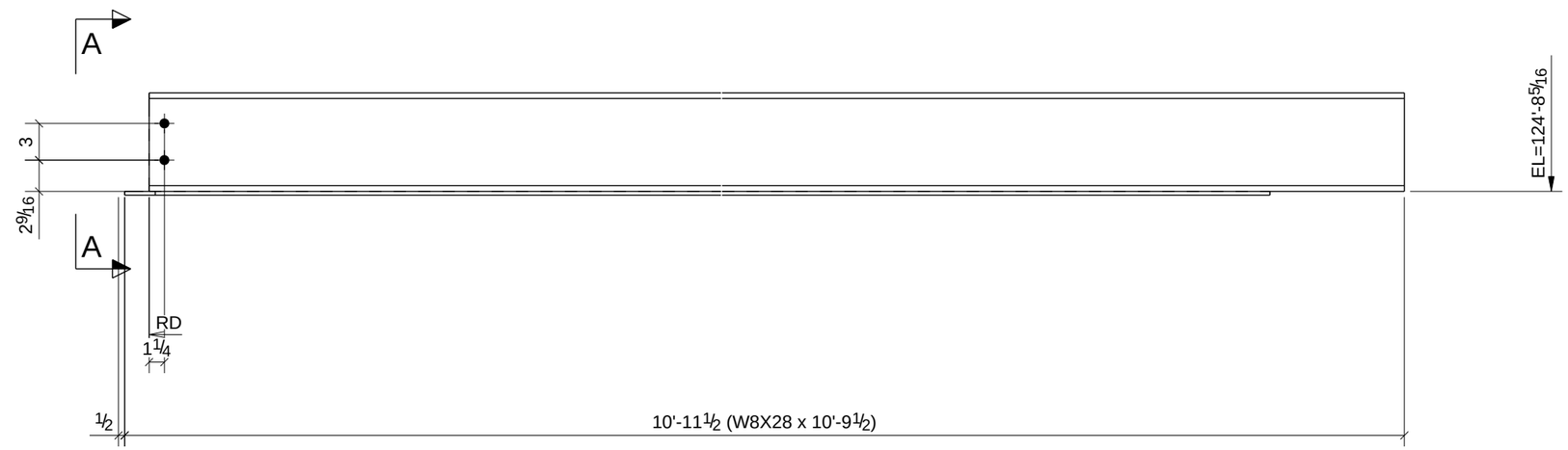

LINTEL TYPE: E / M.O. = 7'-1 / LOC. : (RM 233) / FRAME TYPE: W14

PROCESS CONTROL
PROCESS BY
FAB: _____
FIT AND WELD: _____
INSPECTION: _____
OTHER (IF NEEDED)
_____ : _____
_____ : _____
_____ : _____
_____ : _____
_____ : _____
REFERENCE LATEST ERECTION DRAWINGS FOR MATERIAL & FABRICATION INFORMATION

ONE - LINTEL - L37

W	8 1/16" x 1/4"
F	6 9/16" x 7/16"

DATE	NO.	DESCRIPTION	BY
5/28/11	B	For Checking	TMc
5/16/11	A	For Approval	TMc

BILL OF MATERIAL

Qty Ea.	Qty Tot	Piece Mark	Description	Length	Weight Total	Remarks	Adv Mill #	Steel Grade
	1	L37	LINTEL					
	1		W8X28	10'-9 1/2"	303	SQ-2 GALVANIZED		A992
	1	p60	PL5/16"X14"	10'-0 1/2"	148	GALVANIZED		A36

STEEL ASTM	A992	UNO
ELECTRODES	E70XX L.H.	UNO
WELDS	1/4" FILLET	UNO
OPEN HOLES	13/16" UNO	FINISH PER SPECS
BOLTS	3/4" A325N	UNO
PAINT	1 S/C STD PRIMER U.N.O.	UNO

PROJECT NAME
OLDE ORCHARD ELEMENTARY SCHOOL

LOCATION
800 McNAUGHTEN RD. COLUMBUS, OHIO 43213

CONTRACTOR
THOMAS AND MARKER CONSTRUCTION

ARCHITECT
BRAUN & STEIDL

North Central Fabrication, Ltd.
NORTH CENTRAL FABRICATION
Mansfield, OH 44906
419-529-2744 FAX 419-529-5387 http://www.northcentralfab
AISC CERTIFIED FABRICATOR

DESCRIPTION	DATE	DATE	JOB No.
LINTEL	05/14/2011		70234
	DRAWN BY TMc	CHECKED BY TAN	DRG No. L37

PHASE				
1	2	3	4	5
1	0	0	0	0

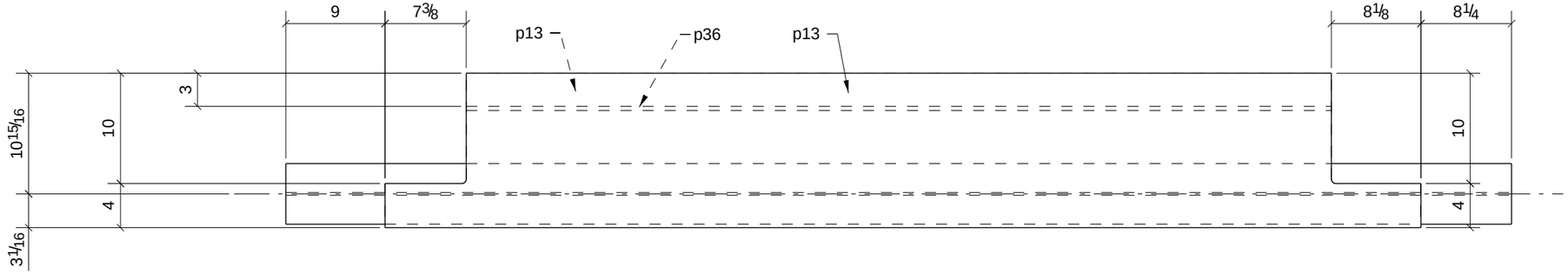

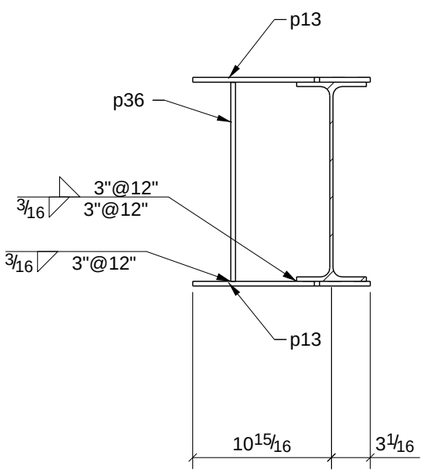

A - A

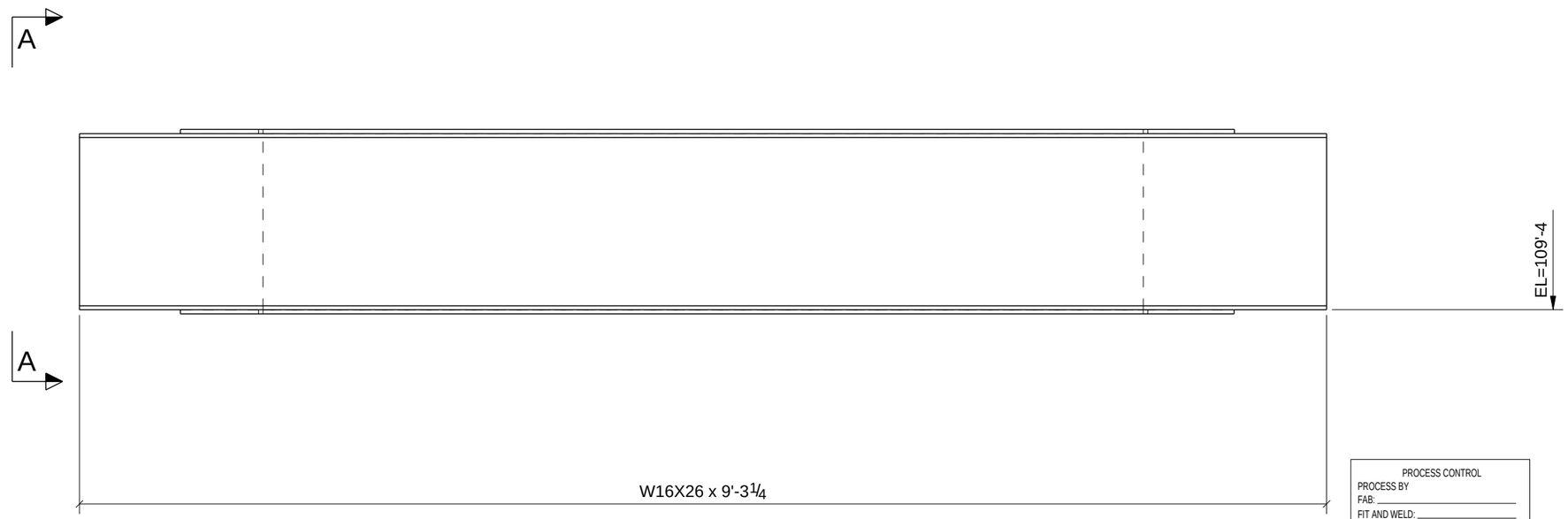

LINTEL TYPE: L / M.O. = 8'-0 / LOC. : (X197) / FRAME TYPE: EXPOSED

PROCESS CONTROL
PROCESS BY
FAB: _____
FIT AND WELD: _____
INSPECTION: _____
OTHER (IF NEEDED)
_____ : _____
_____ : _____
_____ : _____
_____ : _____
_____ : _____
REFERENCE LATEST ERECTION DRAWINGS FOR MATERIAL & FABRICATION INFORMATION

ONE - LINTEL - L38

W	15 11/16" x 1/4"
F	5 1/2" x 3/8"

BILL OF MATERIAL

Qty Ea.	Qty Tot	Piece Mark	Description	Length	Weight Total	Remarks	Adv Mill #	Steel Grade
	1	L38	LINTEL					
	1		W16X26	9'-3 1/4"	242	SQ-2 GALVANIZED		A992
	2	p13	PL3/8"X14"	7'-10"	247	GALVANIZED		A36
	1	p36	PL3/8"X15 11/16"	6'-6 1/2"	131	GALVANIZED		A36

STEEL ASTM	A992		UNO
ELECTRODES	E70XX L.H.		UNO
WELDS	1/4" FILLET		UNO
OPEN HOLES	13/16"	UNO	FINISH PER SPECS
BOLTS	3/4" A325N		UNO
PAINT	1 S/C STD PRIMER U.N.O.		UNO

PROJECT NAME
OLDE ORCHARD ELEMENTARY SCHOOL

LOCATION
800 McNAUGHTEN RD. COLUMBUS, OHIO 43213

CONTRACTOR
THOMAS AND MARKER CONSTRUCTION

ARCHITECT
BRAUN & STEIDL

DATE	NO.	DESCRIPTION	BY
5/28/11	B	For Checking	TMc
5/16/11	A	For Approval	TMc

North Central Fabrication, Ltd.

NORTH CENTRAL FABRICATION
Mansfield, OH 44906
419-529-2744 FAX 419-529-5387 http://www.northcentralfab

AISC CERTIFIED FABRICATOR

DESCRIPTION: LINTEL	DATE: 05/14/2011	DATE	JOB No. 70234
	DRAWN BY: TMc	CHECKED BY: TAN	DRG No. L38

PHASE				
1	2	3	4	5
1	0	0	0	0

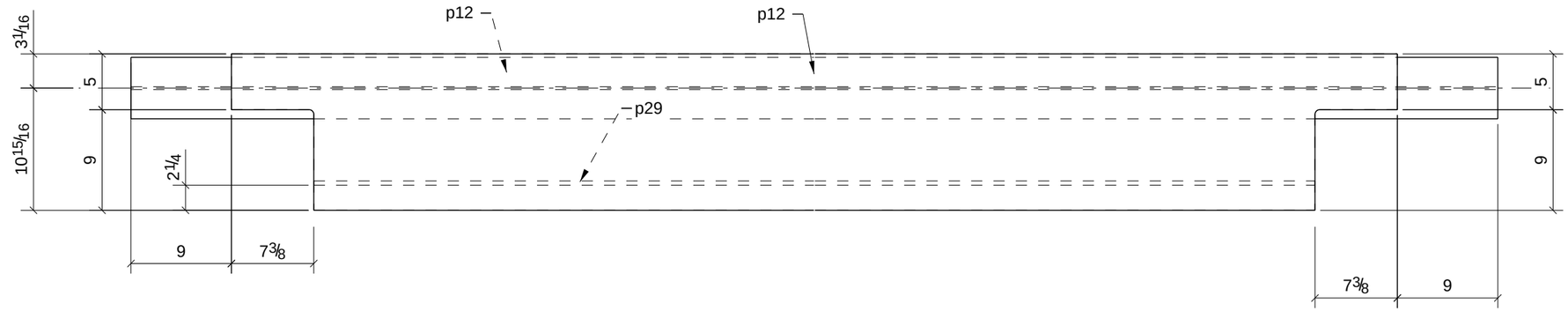

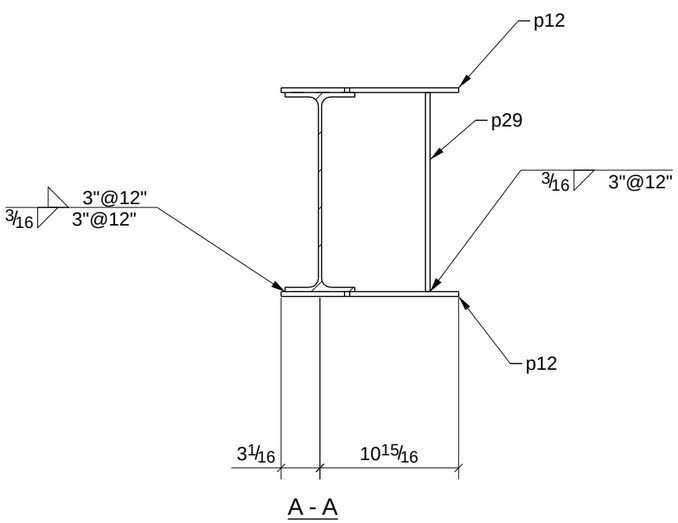

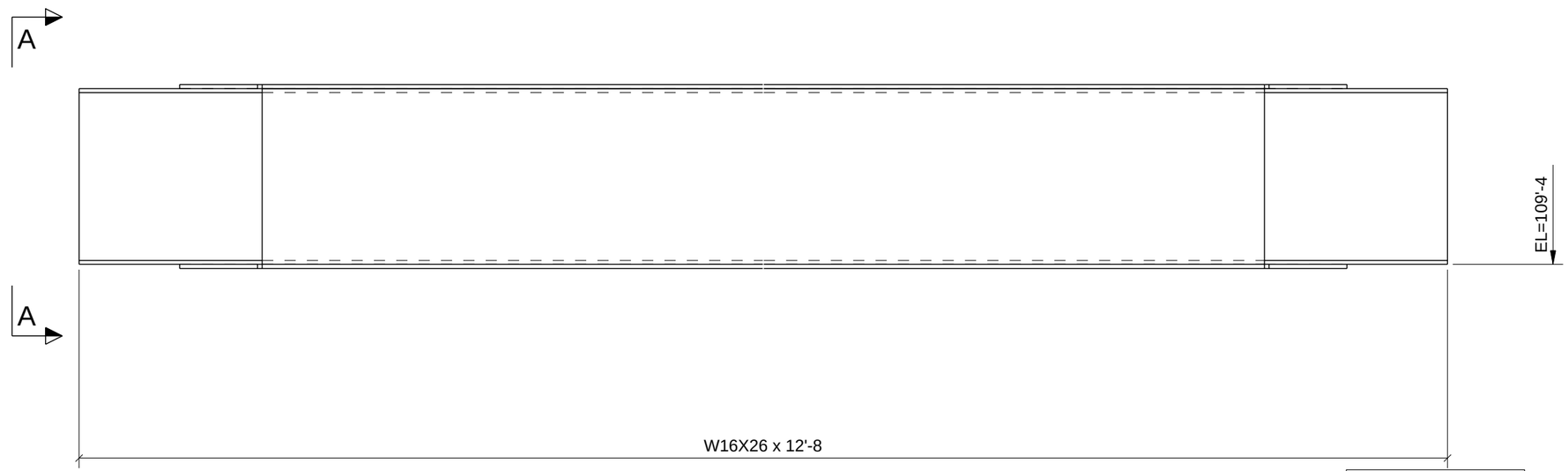

LINTEL TYPE: L / M.O. = 11'-4-5/8 / LOC. : (X196) / FRAME TYPE: EXPOSED

PROCESS CONTROL
PROCESS BY
FAB: _____
FIT AND WELD: _____
INSPECTION: _____
OTHER (IF NEEDED) _____
_____ : _____
_____ : _____
_____ : _____
_____ : _____
REFERENCE LATEST ERECTION DRAWINGS FOR MATERIAL & FABRICATION INFORMATION

ONE - LINTEL - L39

W	15 11/16" x 1/4"
F	5 1/2" x 3/8"

BILL OF MATERIAL

Qty Ea.	Qty Tot	Piece Mark	Description	Length	Weight Total	Remarks	Adv Mill #	Steel Grade
	1	L39	LINTEL					
	1		W16X26	12'-8"	331	SQ-2 GALVANIZED		A992
	2	p12	PL3/8"X14"	11'-2"	371	GALVANIZED		A36
	1	p29	PL3/8"X15 11/16"	9'-11 1/4"	199	GALVANIZED		A36

STEEL ASTM	A992		UNO
ELECTRODES	E70XX L.H.		UNO
WELDS	1/4" FILLET		UNO
OPEN HOLES	13/16"	UNO	FINISH PER SPECS
BOLTS	3/4" A325N		UNO
PAINT	1 S/C STD PRIMER U.N.O.		UNO

PROJECT NAME
OLDE ORCHARD ELEMENTARY SCHOOL

LOCATION
800 McNAUGHTEN RD. COLUMBUS, OHIO 43213

CONTRACTOR
THOMAS AND MARKER CONSTRUCTION

ARCHITECT
BRAUN & STEIDL

DATE	NO.	DESCRIPTION	BY
5/28/11	B	For Checking	TMc
5/16/11	A	For Approval	TMc

North Central Fabrication, Ltd.

NORTH CENTRAL FABRICATION
Mansfield, OH 44906
419-529-2744 FAX 419-529-5387 http://www.northcentralfab

AISC CERTIFIED FABRICATOR

DESCRIPTION: LINTEL	DATE: 05/14/2011	DATE:	JOB No. 70234
	DRAWN BY: TMc	CHECKED BY: TAN	DRG No. L39

PHASE				
1	2	3	4	5
5	0	0	0	0

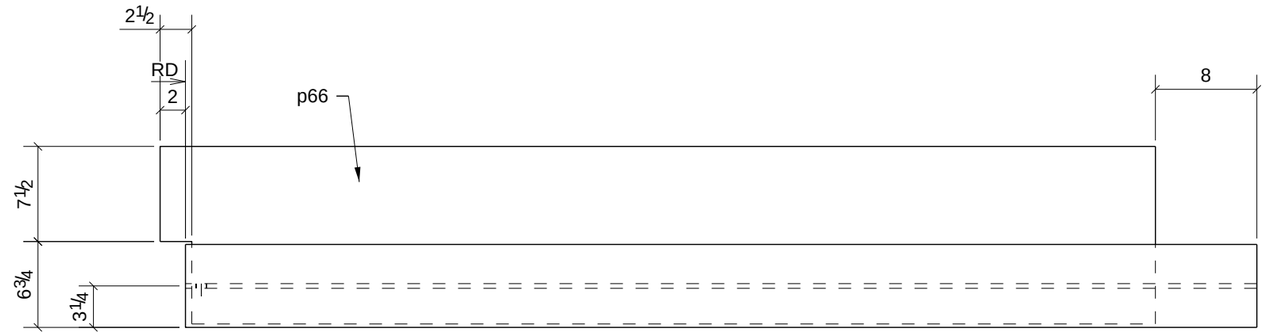

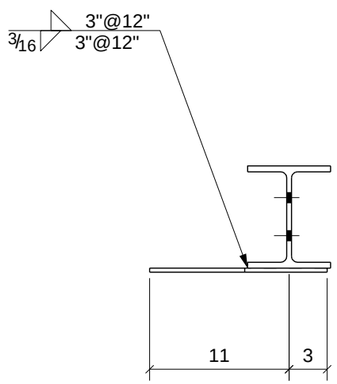

A - A

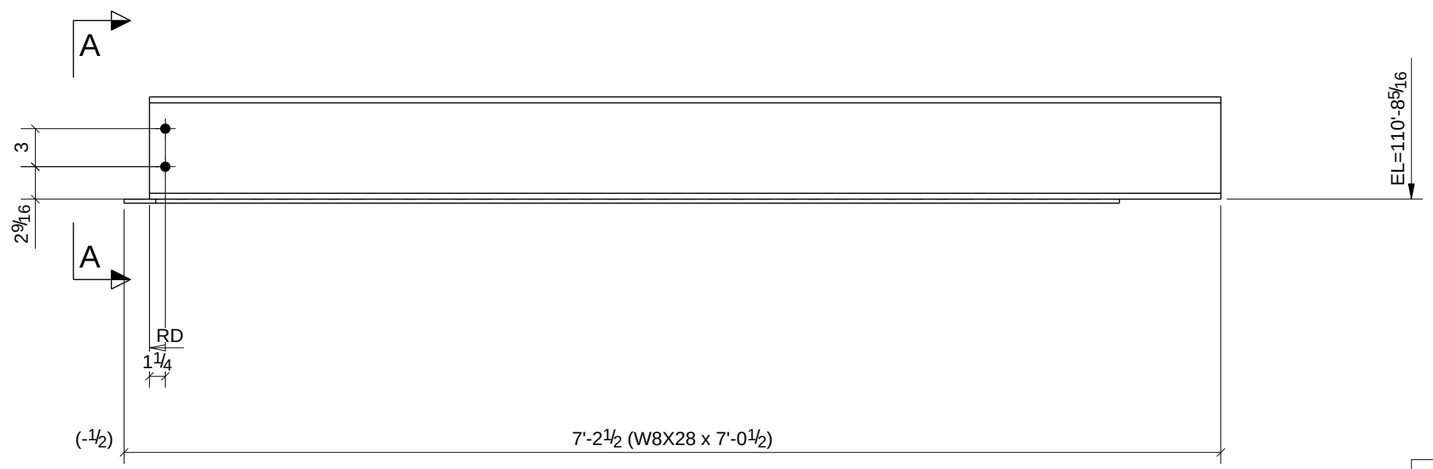

LINTEL TYPE: E / M.O. = 6'-7 / LOC. : (RM 178) / FRAME TYPE: W7

LINTEL TYPE: E / M.O.= 6'-7 /LOC: (RM 156) / FRAME TYPE: W8
LINTEL TYPE: E / M.O.= 6'-7 /LOC: (RM 160) / FRAME TYPE: W8
LINTEL TYPE: E / M.O.= 6'-7 /LOC: (RM 162) / FRAME TYPE: W8
LINTEL TYPE: E / M.O.= 6'-7 /LOC: (RM 170) / FRAME TYPE: W8

5 - LINTELS - L40

W	8 1/16"x1/4"
F	6 9/16"x7/16"

PROCESS CONTROL
PROCESS BY
FAB: _____
FIT AND WELD: _____
INSPECTION: _____
OTHER (IF NEEDED) _____
_____ : _____
_____ : _____
_____ : _____
_____ : _____
REFERENCE LATEST ERECTION DRAWINGS FOR MATERIAL & FABRICATION INFORMATION

DATE	NO.	DESCRIPTION	BY
5/28/11	B	For Checking	TMc
5/16/11	A	For Approval	TMc

BILL OF MATERIAL

Qty Ea.	Qty Tot	Piece Mark	Description	Length	Weight Total	Remarks	Adv Mill #	Steel Grade
	5	L40	LINTELS					
	5		W8X28	7'-0 1/2"	987	SQ-2 GALVANIZED		A992
	5	p66	PL5/16"X14"	6'-6 1/2"	480	GALVANIZED		A36

STEEL ASTM	A992		UNO
ELECTRODES	E70XX L.H.		UNO
WELDS	1/4" FILLET		UNO
OPEN HOLES	13/16"	UNO	FINISH PER SPECS
BOLTS	3/4" A325N		UNO
PAINT	1 S/C STD PRIMER U.N.O.		UNO

PROJECT NAME
OLDE ORCHARD ELEMENTARY SCHOOL

LOCATION
800 McNAUGHTEN RD. COLUMBUS, OHIO 43213

CONTRACTOR
THOMAS AND MARKER CONSTRUCTION

ARCHITECT
BRAUN & STEIDL

North Central Fabrication, Ltd.
NORTH CENTRAL FABRICATION
Mansfield, OH 44906
419-529-2744 FAX 419-529-5387 http://www.northcentralfab
AISC CERTIFIED FABRICATOR

DESCRIPTION	DATE	DATE	JOB No.
LINTEL	05/14/2011		70234
	DRAWN BY TMc	CHECKED BY TAN	DRG No. L40

PHASE				
1	2	3	4	5
1	0	0	0	0

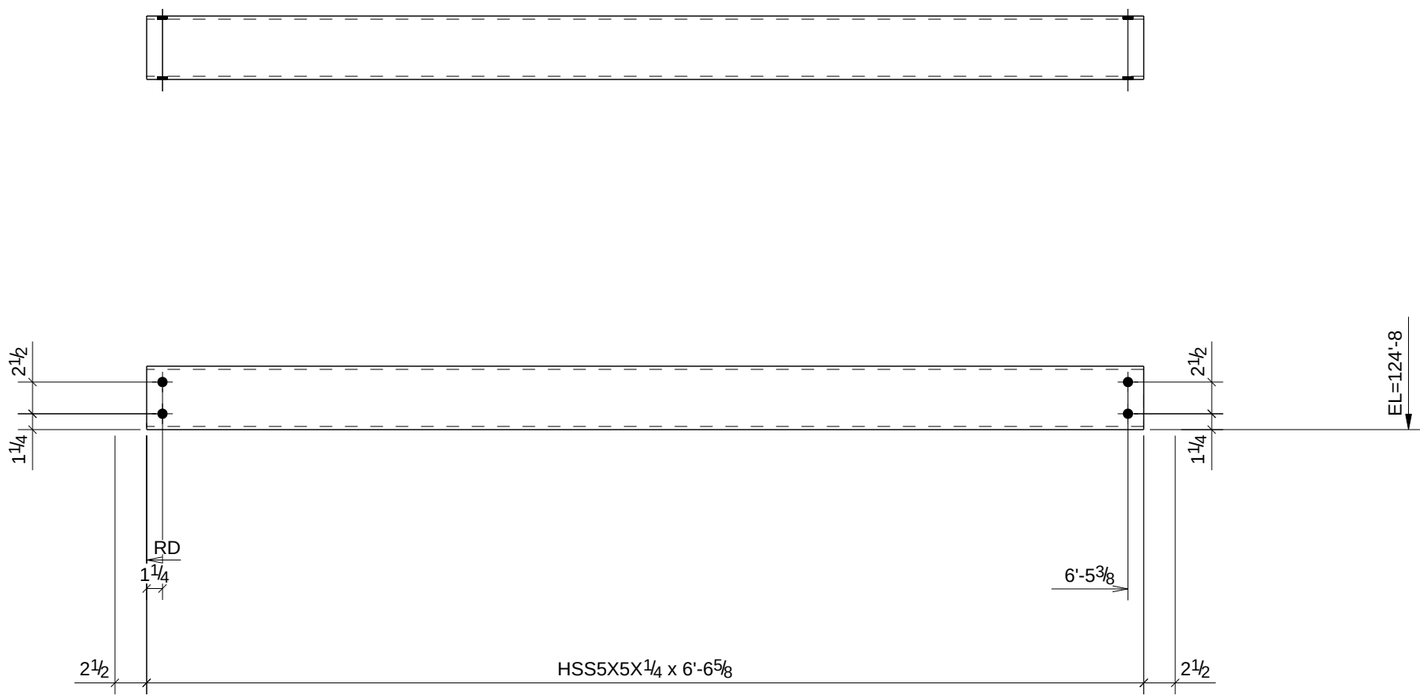

LINTEL TYPE: G / M.O. = 6'-7 / LOC. : (RM 227) / FRAME TYPE: W13

PROCESS CONTROL
PROCESS BY
FAB: _____
FIT AND WELD: _____
INSPECTION: _____
OTHER (IF NEEDED) _____
_____ : _____
_____ : _____
_____ : _____
_____ : _____
_____ : _____
REFERENCE LATEST ERECTION DRAWINGS FOR MATERIAL & FABRICATION INFORMATION

ONE - LINTEL - L41

DATE	NO.	DESCRIPTION	BY
5/28/11	B	For Checking	TMc
5/16/11	A	For Approval	TMc

BILL OF MATERIAL

Qty Ea.	Qty Tot	Piece Mark	Description	Length	Weight Total	Remarks	Adv Mill #	Steel Grade
	1	L41	LINTEL					
	1		HSS5X5X1/4	6'-6 5/8"	96	SQ-2 GALVANIZED		A992

STEEL ASTM	A992	UNO
ELECTRODES	E70XX L.H.	UNO
WELDS	1/4" FILLET	UNO
OPEN HOLES	13/16" UNO	FINISH PER SPECS
BOLTS	3/4" A325N	UNO
PAINT	1 S/C STD PRIMER U.N.O.	UNO

PROJECT NAME
OLDE ORCHARD ELEMENTARY SCHOOL
LOCATION
800 McNAUGHTEN RD. COLUMBUS, OHIO 43213
CONTRACTOR
THOMAS AND MARKER CONSTRUCTION
ARCHITECT
BRAUN & STEIDL

North Central Fabrication, Ltd.
NORTH CENTRAL FABRICATION
Mansfield, OH 44906
419-529-2744 FAX 419-529-5387 http://www.northcentralfab
AISC CERTIFIED FABRICATOR

DESCRIPTION	DATE	DATE	JOB No.
LINTEL	05/14/2011		70234
	DRAWN BY TMc	CHECKED BY TAN	DRG No. L41

PHASE				
1	2	3	4	5
2	0	0	0	0

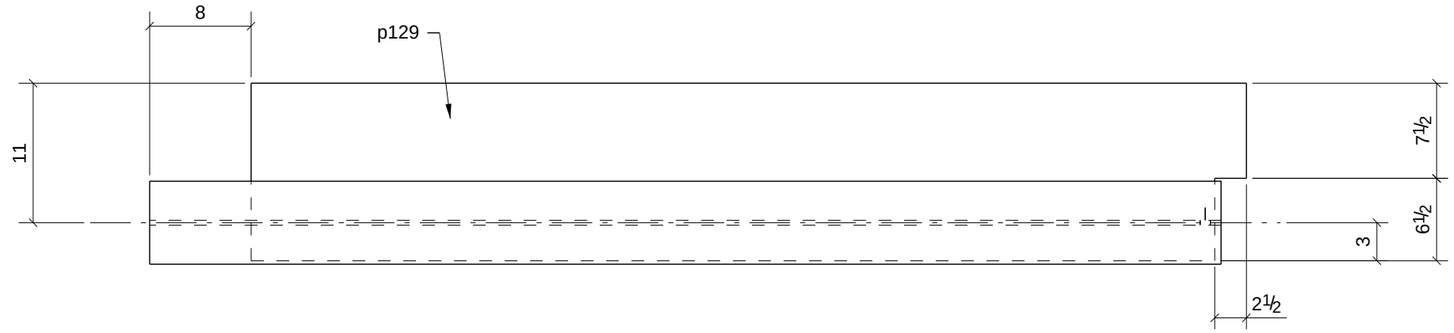

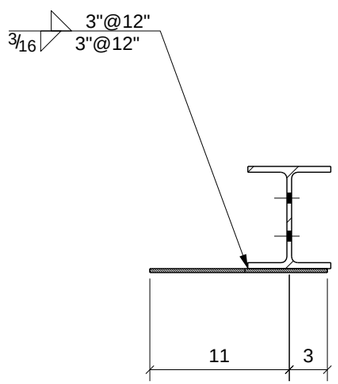

A - A

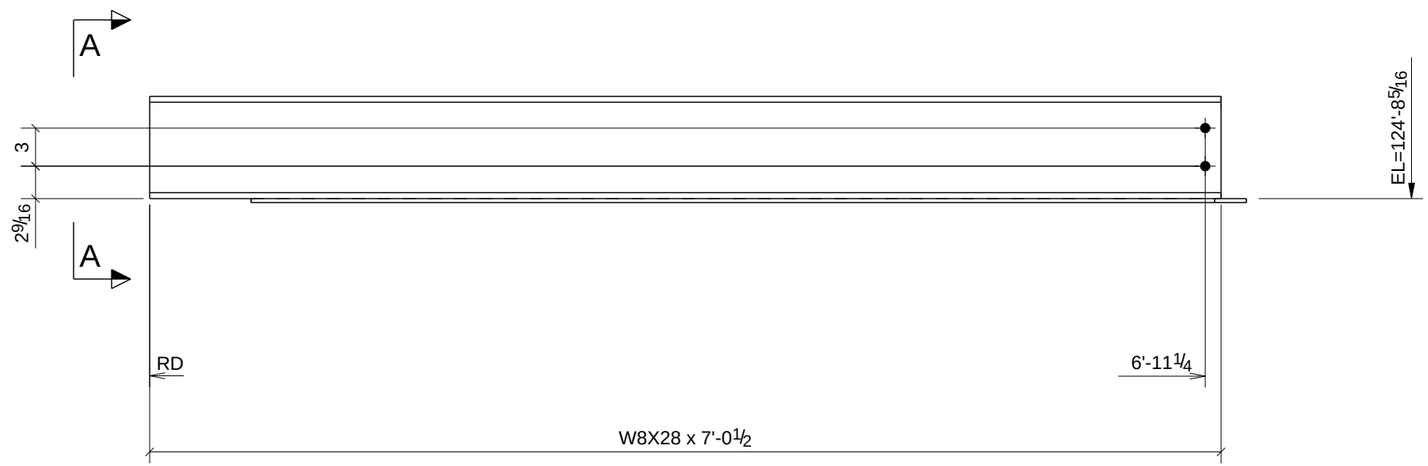

LINTEL TYPE: E / M.O. = 6'-7 / LOC. : (RM 226) / FRAME TYPE: W16
LINTEL TYPE: E / M.O.= 6'-7 /LOC: (RM 224) / FRAME TYPE: W16

PROCESS CONTROL
PROCESS BY
FAB: _____
FIT AND WELD: _____
INSPECTION: _____
OTHER (IF NEEDED)
_____ : _____
_____ : _____
_____ : _____
_____ : _____
REFERENCE LATEST ERECTION DRAWINGS FOR MATERIAL & FABRICATION INFORMATION

2 - LINTELS - L43

W	8 1/16" x 1/4"
F	6 9/16" x 7/16"

DATE	NO.	DESCRIPTION	BY
5/28/11	B	For Checking	TMc
5/16/11	A	For Approval	TMc

BILL OF MATERIAL

Qty Ea.	Qty Tot	Piece Mark	Description	Length	Weight Total	Remarks	Adv Mill #	Steel Grade
	2	L43	LINTELS					
	2		W8X28	7'-0 1/2"	395	SQ-2 GALVANIZED		A992
	2	p129	PL5/16"X14"	6'-6 1/2"	192	GALVANIZED		A36

STEEL ASTM	A992		UNO
ELECTRODES	E70XX L.H.		UNO
WELDS	1/4" FILLET		UNO
OPEN HOLES	13/16"	UNO	FINISH PER SPECS
BOLTS	3/4" A325N		UNO
PAINT	1 S/C STD PRIMER U.N.O.		UNO

PROJECT NAME
OLDE ORCHARD ELEMENTARY SCHOOL

LOCATION
800 McNAUGHTEN RD. COLUMBUS, OHIO 43213

CONTRACTOR
THOMAS AND MARKER CONSTRUCTION

ARCHITECT
BRAUN & STEIDL

North Central Fabrication, Ltd.
NORTH CENTRAL FABRICATION
Mansfield, OH 44906
419-529-2744 FAX 419-529-5387 http://www.northcentralfab
AISC CERTIFIED FABRICATOR

DESCRIPTION	DATE	DATE	JOB No.
LINTEL	05/14/2011		70234
	DRAWN BY TMc	CHECKED BY TAN	DRG No. L43

PHASE				
1	2	3	4	5
5	0	0	0	0

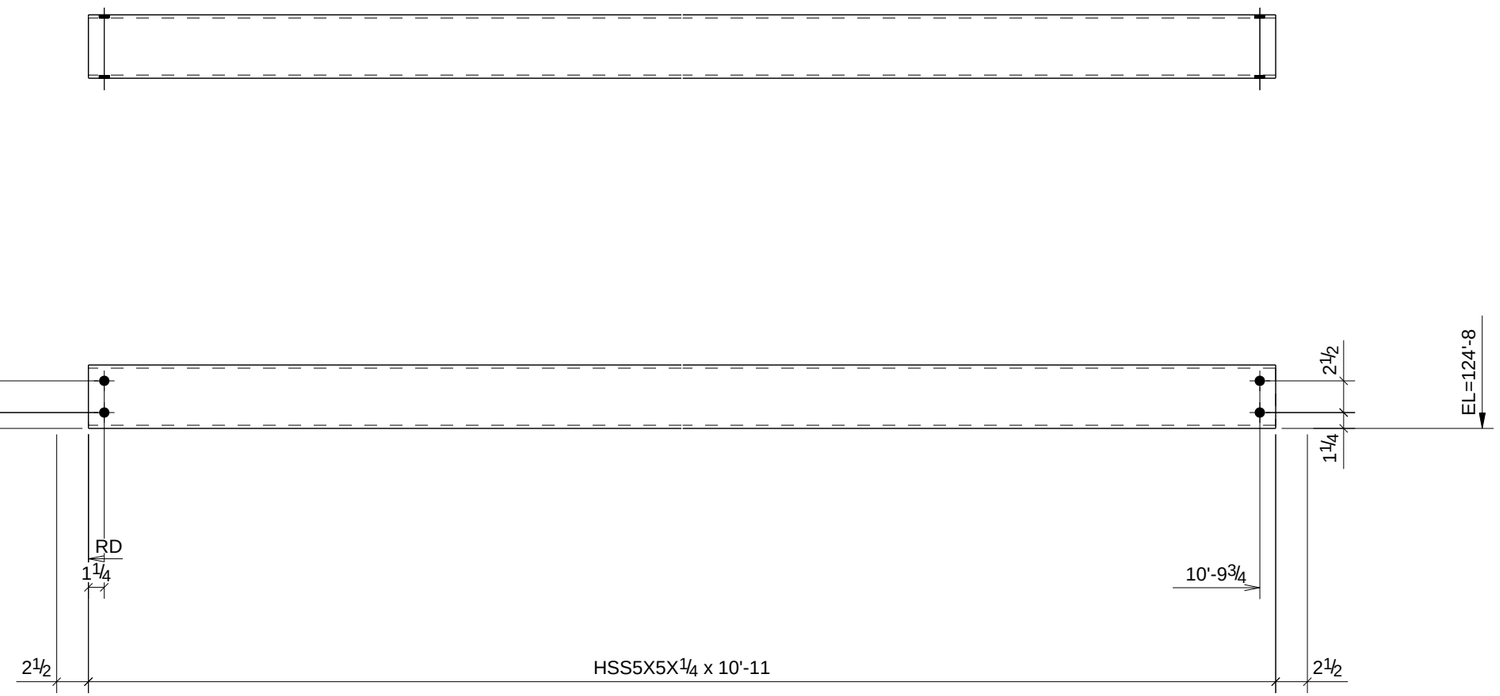

LINTEL TYPE: G / M.O. = 11'-5 / LOC. : (RM 227) / FRAME TYPE: W13

LINTEL TYPE: G / M.O.= 11'-5 /LOC: (RM 225) / FRAME TYPE: W13
LINTEL TYPE: G / M.O.= 11'-5 /LOC: (RM 220) / FRAME TYPE: W13
LINTEL TYPE: G / M.O.= 11'-5 /LOC: (RM 218) / FRAME TYPE: W13
LINTEL TYPE: G / M.O.= 11'-5 /LOC: (RM 216) / FRAME TYPE: W13

PROCESS CONTROL
PROCESS BY
FAB: _____
FIT AND WELD: _____
INSPECTION: _____
OTHER (IF NEEDED)
_____ : _____
_____ : _____
_____ : _____
_____ : _____
REFERENCE LATEST ERECTION DRAWINGS FOR MATERIAL & FABRICATION INFORMATION

5 - LINTELS - L44

DATE	NO.	DESCRIPTION	BY
5/28/11	B	For Checking	TMc
5/16/11	A	For Approval	TMc

BILL OF MATERIAL

Qty Ea.	Qty Tot	Piece Mark	Description	Length	Weight Total	Remarks	Adv Mill #	Steel Grade
	5	L44	LINTELS					
	5		HSS5X5X1/4	10'-11"	799	SQ-2 GALVANIZED		A992

STEEL ASTM	A992	UNO
ELECTRODES	E70XX L.H.	UNO
WELDS	1/4" FILLET	UNO
OPEN HOLES	13/16" UNO	FINISH PER SPECS
BOLTS	3/4" A325N	UNO
PAINT	1 S/C STD PRIMER U.N.O.	UNO

PROJECT NAME
OLDE ORCHARD ELEMENTARY SCHOOL

LOCATION
800 McNAUGHTEN RD. COLUMBUS, OHIO 43213

CONTRACTOR
THOMAS AND MARKER CONSTRUCTION

ARCHITECT
BRAUN & STEIDL

North Central Fabrication, Ltd.

NORTH CENTRAL FABRICATION
Mansfield, OH 44906
419-529-2744 FAX 419-529-5387 http://www.northcentralfab

AISC CERTIFIED FABRICATOR

DESCRIPTION	DATE	DATE	JOB No.
LINTEL	05/14/2011		70234
	DRAWN BY TMc	CHECKED BY TAN	DRG No. L44

PHASE				
1	2	3	4	5
4	0	0	0	0

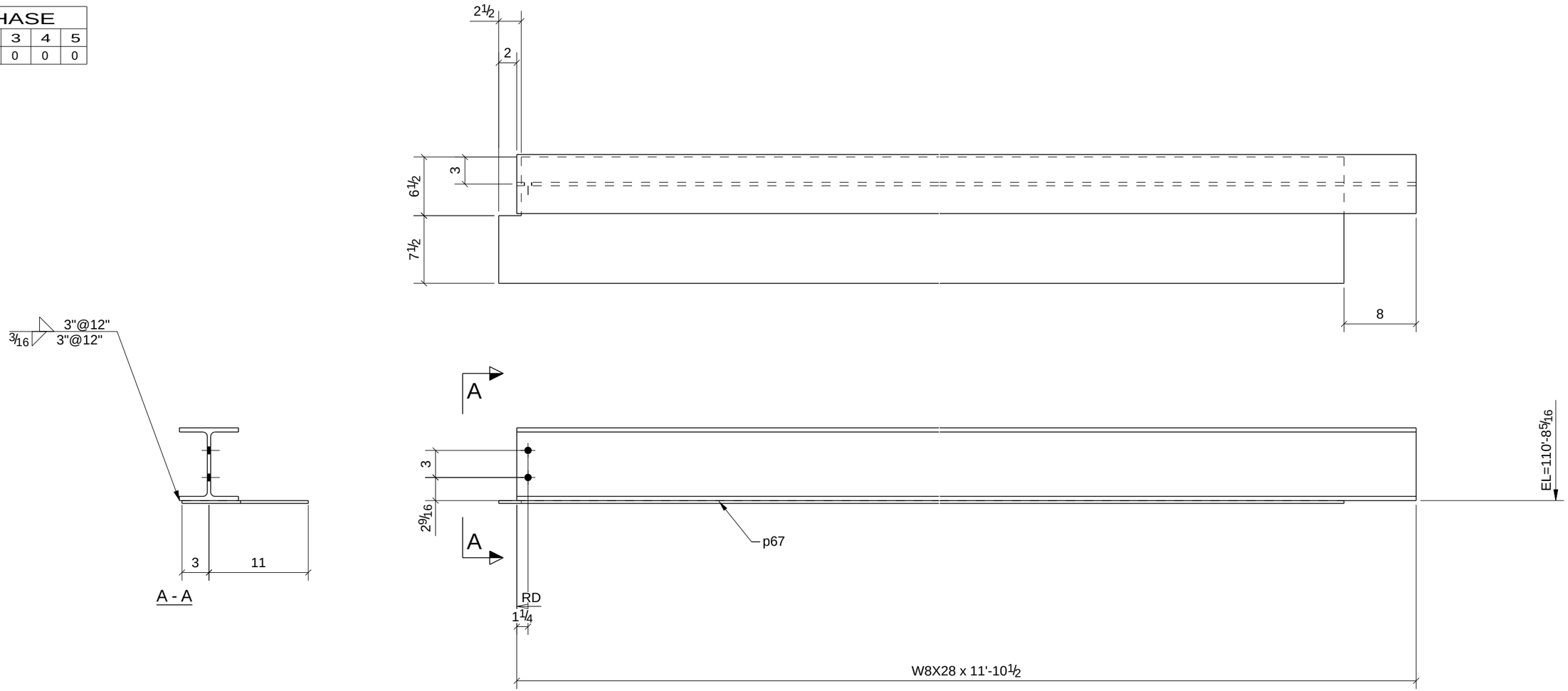

LINTEL TYPE: E / M.O. = 11'-5 / LOC. : (RM 178) / FRAME TYPE: W7
LINTEL TYPE: E / M.O.= 11'-5 /LOC: (RM 156) / FRAME TYPE: W7
LINTEL TYPE: E / M.O.= 11'-5 /LOC: (RM 160) / FRAME TYPE: W7
LINTEL TYPE: E / M.O.= 11'-5 /LOC: (RM 162) / FRAME TYPE: W7
LINTEL TYPE: E / M.O.= 11'-5 /LOC: (RM 170) / FRAME TYPE: W7

PROCESS CONTROL
PROCESS BY
FAB: _____
FIT AND WELD: _____
INSPECTION: _____
OTHER (IF NEEDED) _____
_____ : _____
_____ : _____
_____ : _____
_____ : _____
REFERENCE LATEST ERECTION DRAWINGS FOR MATERIAL & FABRICATION INFORMATION

4 - LINTELS - L45

W	8 1/16" x 1/4"
F	6 9/16" x 7/16"

DATE	NO.	DESCRIPTION	BY
5/28/11	B	For Checking	TMc
5/16/11	A	For Approval	TMc

BILL OF MATERIAL

Qty Ea.	Qty Tot	Piece Mark	Description	Length	Weight Total	Remarks	Adv Mill #	Steel Grade
	4	L45	LINTELS					
	4		W8X28	11'-10 1/2"	1332	SQ-2 GALVANIZED		A992
	4	p67	PL5/16"X14"	11'-4 1/2"	672	GALVANIZED		A36

STEEL ASTM	A992	UNO
ELECTRODES	E70XX L.H.	UNO
WELDS	1/4" FILLET	UNO
OPEN HOLES	13/16" UNO	FINISH PER SPECS
BOLTS	3/4" A325N	UNO
PAINT	1 S/C STD PRIMER U.N.O.	UNO

PROJECT NAME
OLDE ORCHARD ELEMENTARY SCHOOL

LOCATION
800 McNAUGHTEN RD. COLUMBUS, OHIO 43213

CONTRACTOR
THOMAS AND MARKER CONSTRUCTION

ARCHITECT
BRAUN & STEIDL

North Central Fabrication, Ltd.
NORTH CENTRAL FABRICATION
Mansfield, OH 44906
419-529-2744 FAX 419-529-5387 http://www.northcentralfab
AISC CERTIFIED FABRICATOR

DESCRIPTION	DATE	DATE	JOB No.
LINTEL	05/14/2011		70234
	DRAWN BY TMc	CHECKED BY TAN	DRG No. L45

PHASE				
1	2	3	4	5
2	0	0	0	0

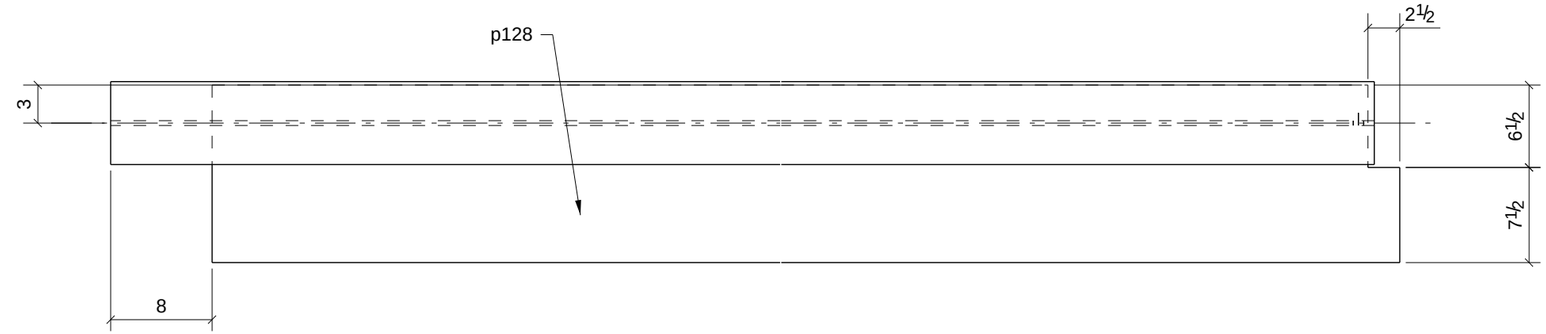

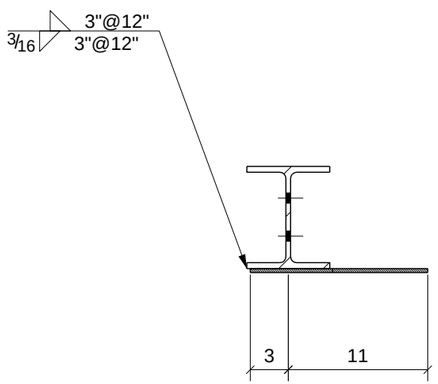

A - A

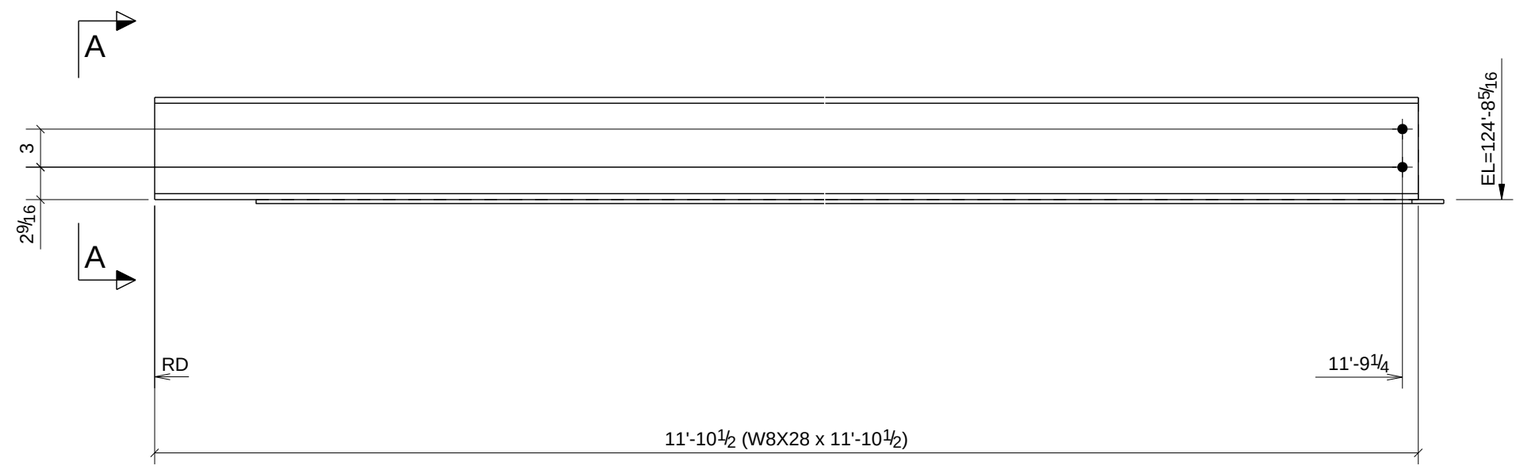

LINTEL TYPE: E / M.O. = 11'-5 / LOC. : (RM 226) / FRAME TYPE: W16

LINTEL TYPE: E / M.O.= 11'-5 /LOC: (RM 224) / FRAME TYPE: W16

PROCESS CONTROL
PROCESS BY
FAB: _____
FIT AND WELD: _____
INSPECTION: _____
OTHER (IF NEEDED)
_____ : _____
_____ : _____
_____ : _____
_____ : _____
_____ : _____
REFERENCE LATEST ERECTION DRAWINGS FOR MATERIAL & FABRICATION INFORMATION

2 - LINTELS - L47

W	8 1/16" x 1/4"
F	6 9/16" x 7/16"

DATE	NO.	DESCRIPTION	BY
5/28/11	B	For Checking	TMc
5/16/11	A	For Approval	TMc

BILL OF MATERIAL

Qty Ea.	Qty Tot	Piece Mark	Description	Length	Weight Total	Remarks	Adv Mill #	Steel Grade
	2	L47	LINTELS					
	2		W8X28	11'-10 1/2"	666	SQ-2 GALVANIZED		A992
	2	p128	PL5/16"X14"	11'-4 1/2"	336	GALVANIZED		A36

STEEL ASTM	A992	UNO
ELECTRODES	E70XX L.H.	UNO
WELDS	1/4" FILLET	UNO
OPEN HOLES	13/16" UNO	FINISH PER SPECS
BOLTS	3/4" A325N	UNO
PAINT	1 S/C STD PRIMER U.N.O.	UNO

PROJECT NAME
OLDE ORCHARD ELEMENTARY SCHOOL

LOCATION
800 McNAUGHTEN RD. COLUMBUS, OHIO 43213

CONTRACTOR
THOMAS AND MARKER CONSTRUCTION

ARCHITECT
BRAUN & STEIDL

North Central Fabrication, Ltd.
NORTH CENTRAL FABRICATION
Mansfield, OH 44906
419-529-2744 FAX 419-529-5387 http://www.northcentralfab
AISC CERTIFIED FABRICATOR

DESCRIPTION	DATE	DATE	JOB No.
LINTEL	05/14/2011		70234
	DRAWN BY TMc	CHECKED BY TAN	DRG No. L47

PHASE				
1	2	3	4	5
4	0	0	0	0

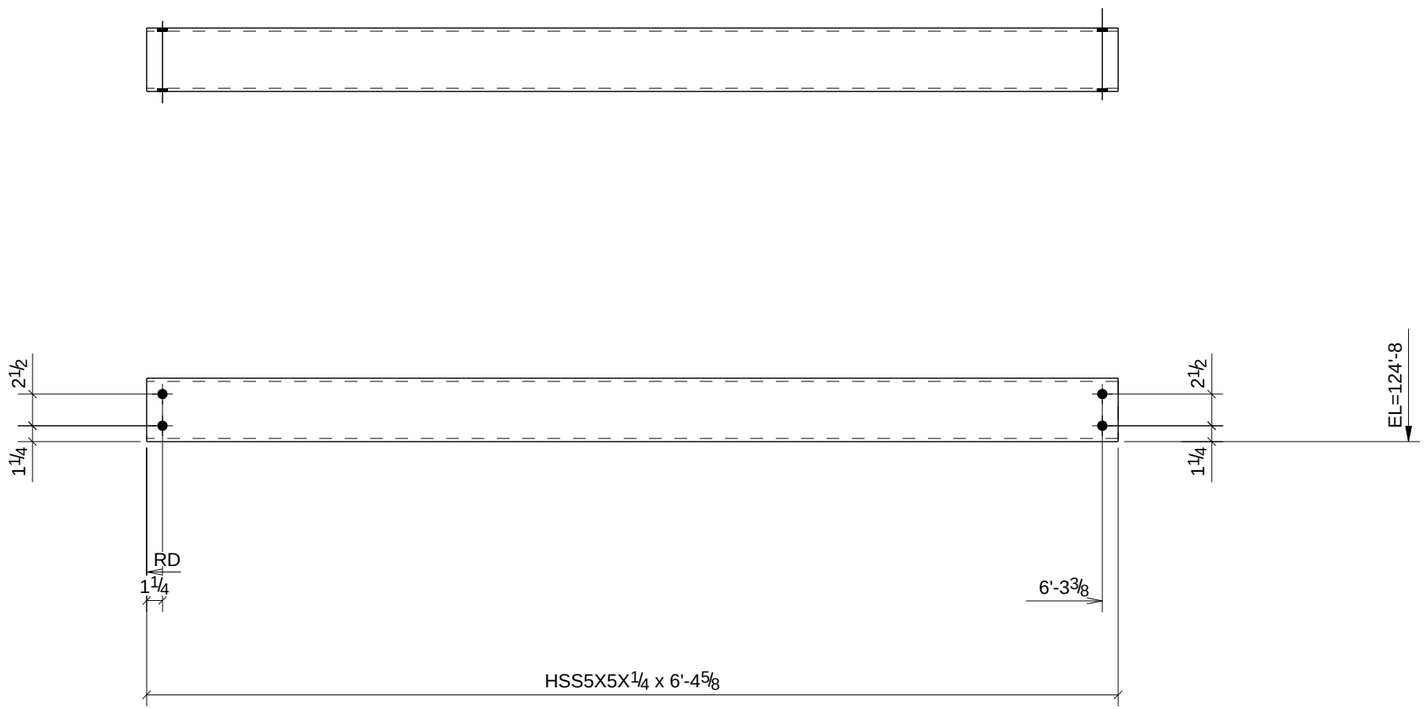

LINTEL TYPE: G / M.O. = 6'-7 / LOC. : (RM 225) / FRAME TYPE: W13

LINTEL TYPE: G / M.O.= 6'-7 /LOC: (RM 220) / FRAME TYPE: W13
LINTEL TYPE: G / M.O.= 6'-7 /LOC: (RM 218) / FRAME TYPE: W13
LINTEL TYPE: G / M.O.= 6'-7 /LOC: (RM 216) / FRAME TYPE: W13

PROCESS CONTROL
PROCESS BY
FAB: _____
FIT AND WELD: _____
INSPECTION: _____
OTHER (IF NEEDED) _____
_____ : _____
_____ : _____
_____ : _____
_____ : _____
_____ : _____
REFERENCE LATEST ERECTION DRAWINGS FOR MATERIAL & FABRICATION INFORMATION

4 - LINTELS - L48

DATE	NO.	DESCRIPTION	BY
5/28/11	B	For Checking	TMc
5/16/11	A	For Approval	TMc

BILL OF MATERIAL

Qty Ea.	Qty Tot	Piece Mark	Description	Length	Weight Total	Remarks	Adv Mill #	Steel Grade
	4	L48	LINTELS					
	4		HSS5X5X1/4	6'-4 5/8"	374	SQ-2 GALVANIZED		A992

STEEL ASTM	A992	UNO
ELECTRODES	E70XX L.H.	UNO
WELDS	1/4" FILLET	UNO
OPEN HOLES	13/16" UNO	FINISH PER SPECS
BOLTS	3/4" A325N	UNO
PAINT	1 S/C STD PRIMER U.N.O.	UNO

PROJECT NAME
OLDE ORCHARD ELEMENTARY SCHOOL

LOCATION
800 McNAUGHTEN RD. COLUMBUS, OHIO 43213

CONTRACTOR
THOMAS AND MARKER CONSTRUCTION

ARCHITECT
BRAUN & STEIDL

North Central Fabrication, Ltd.
NORTH CENTRAL FABRICATION
Mansfield, OH 44906
419-529-2744 FAX 419-529-5387 http://www.northcentralfab
AISC CERTIFIED FABRICATOR

DESCRIPTION	DATE	DATE	JOB No.
LINTEL	05/14/2011		70234
	DRAWN BY TMc	CHECKED BY TAN	DRG No. L48

PHASE				
1	2	3	4	5
1	0	0	0	0

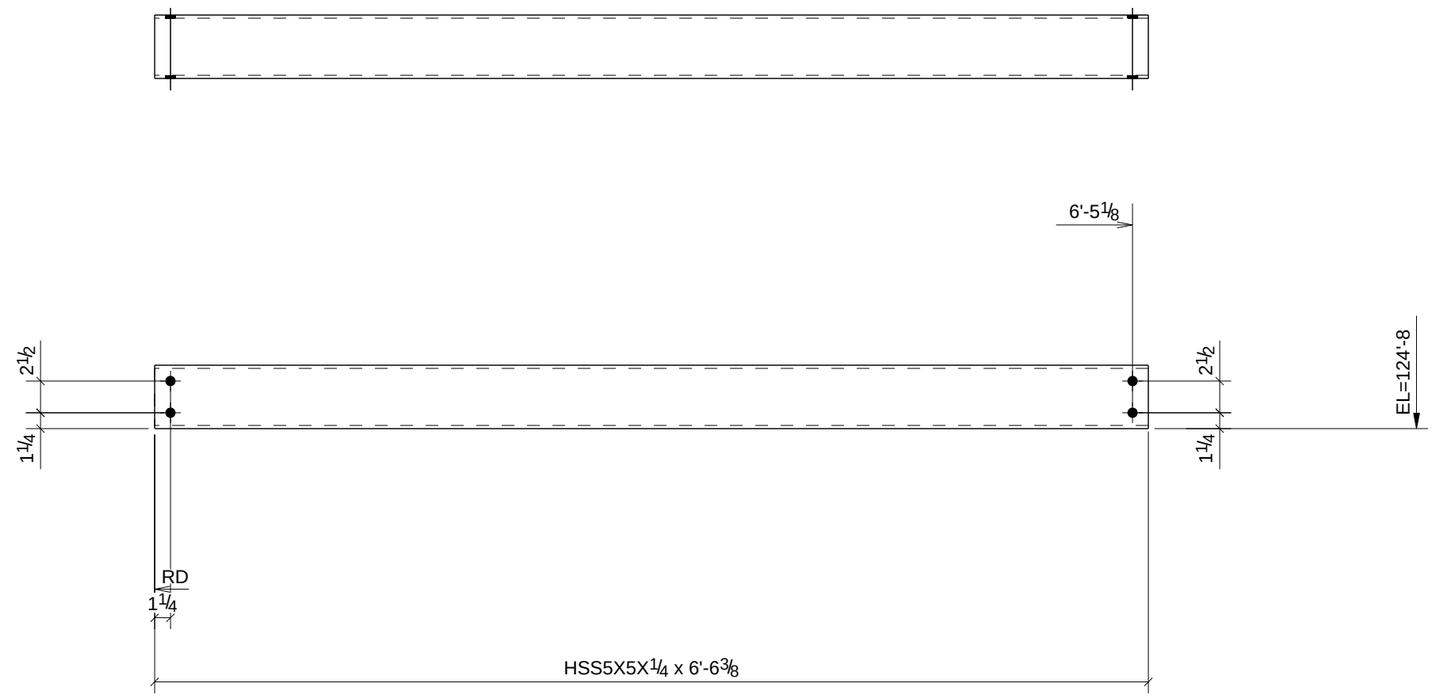

LINTEL TYPE: G / M.O. = 6'-7 / LOC. : (RM 219) / FRAME TYPE: W16

PROCESS CONTROL
PROCESS BY
FAB: _____
FIT AND WELD: _____
INSPECTION: _____
OTHER (IF NEEDED) _____
_____ : _____
_____ : _____
_____ : _____
_____ : _____
REFERENCE LATEST ERECTION DRAWINGS FOR MATERIAL & FABRICATION INFORMATION

ONE - LINTEL - L50

DATE	NO.	DESCRIPTION	BY
5/28/11	B	For Checking	TMc
5/16/11	A	For Approval	TMc

BILL OF MATERIAL

Qty Ea.	Qty Tot	Piece Mark	Description	Length	Weight Total	Remarks	Adv Mill #	Steel Grade
	1	L50	LINTEL					
	1		HSS5X5X1/4	6'-6 3/8"	96	SQ-2 GALVANIZED		A992

STEEL ASTM	A992	UNO
ELECTRODES	E70XX L.H.	UNO
WELDS	1/4" FILLET	UNO
OPEN HOLES	13/16" UNO	FINISH PER SPECS
BOLTS	3/4" A325N	UNO
PAINT	1 S/C STD PRIMER U.N.O.	UNO

PROJECT NAME
OLDE ORCHARD ELEMENTARY SCHOOL

LOCATION
800 McNAUGHTEN RD. COLUMBUS, OHIO 43213

CONTRACTOR
THOMAS AND MARKER CONSTRUCTION

ARCHITECT
BRAUN & STEIDL

North Central Fabrication, Ltd.
NORTH CENTRAL FABRICATION
Mansfield, OH 44906
419-529-2744 FAX 419-529-5387 http://www.northcentralfab
AISC CERTIFIED FABRICATOR

DESCRIPTION	DATE	DATE	JOB No.
LINTEL	05/14/2011		70234
	DRAWN BY TMc	CHECKED BY TAN	DRG No. L50

PHASE				
1	2	3	4	5
5	0	0	0	0

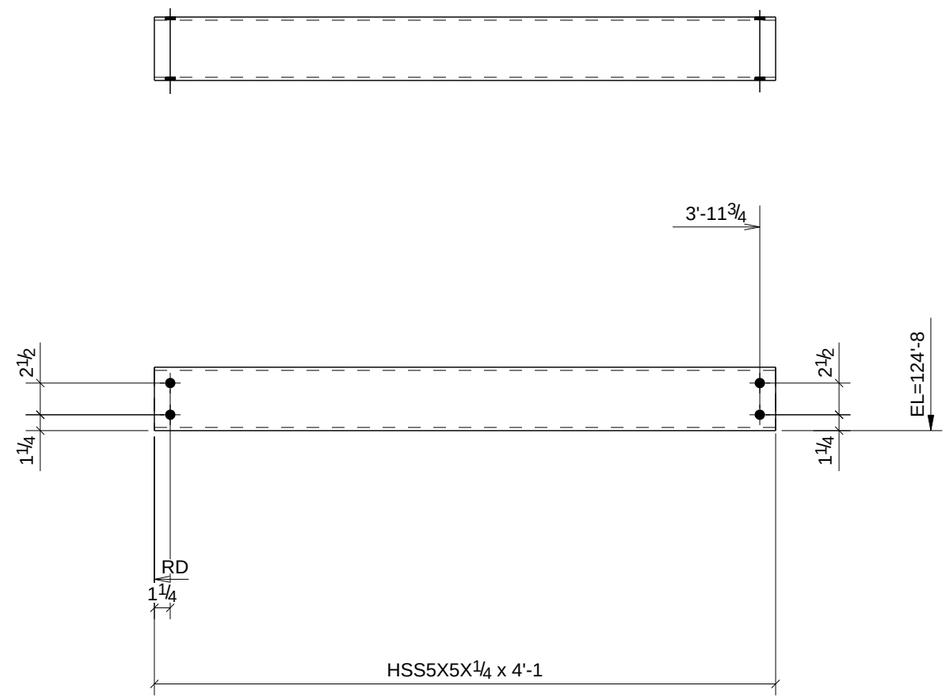

LINTEL TYPE: G / M.O. = 6'-6 / LOC. : (RM 219) / FRAME TYPE: W16

PROCESS CONTROL
PROCESS BY
FAB: _____
FIT AND WELD: _____
INSPECTION: _____
OTHER (IF NEEDED) _____
_____ : _____
_____ : _____
_____ : _____
_____ : _____
REFERENCE LATEST ERECTION DRAWINGS FOR MATERIAL & FABRICATION INFORMATION

5 - LINTELS - L51

DATE	NO.	DESCRIPTION	BY
5/28/11	B	For Checking	TMc
5/16/11	A	For Approval	TMc

BILL OF MATERIAL

Qty Ea.	Qty Tot	Piece Mark	Description	Length	Weight Total	Remarks	Adv Mill #	Steel Grade
	5	L51	LINTELS					
	5		HSS5X5X1/4	4'-1"	299	SQ-2 GALVANIZED		A992

STEEL ASTM	A992	UNO
ELECTRODES	E70XX L.H.	UNO
WELDS	1/4" FILLET	UNO
OPEN HOLES	13/16" UNO	FINISH PER SPECS
BOLTS	3/4" A325N	UNO
PAINT	1 S/C STD PRIMER U.N.O.	UNO

PROJECT NAME
OLDE ORCHARD ELEMENTARY SCHOOL

LOCATION
800 McNAUGHTEN RD. COLUMBUS, OHIO 43213

CONTRACTOR
THOMAS AND MARKER CONSTRUCTION

ARCHITECT
BRAUN & STEIDL

North Central Fabrication, Ltd.
NORTH CENTRAL FABRICATION
Mansfield, OH 44906
419-529-2744 FAX 419-529-5387 http://www.northcentralfab
AISC CERTIFIED FABRICATOR

DESCRIPTION	DATE	DATE	JOB No.
LINTEL	05/14/2011		70234
	DRAWN BY TMc	CHECKED BY TAN	DRG No. L51

PHASE				
1	2	3	4	5
5	0	0	0	0

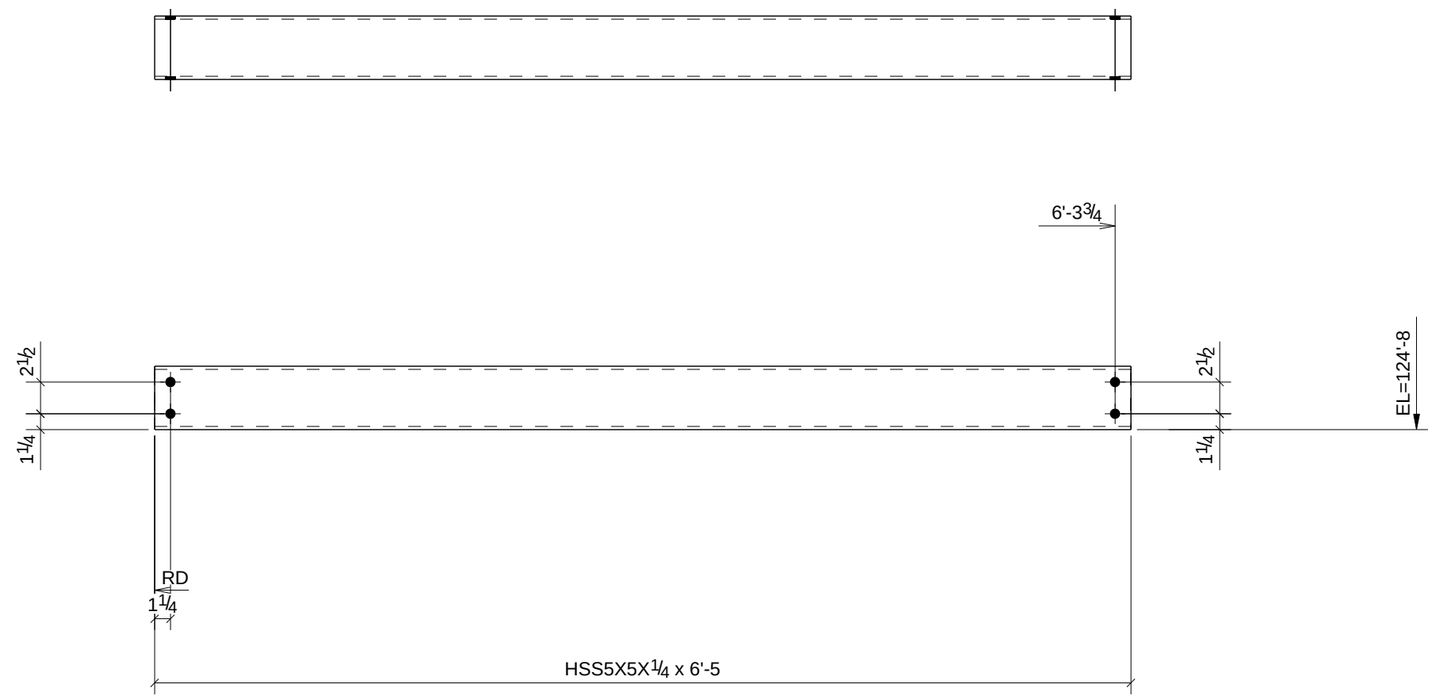

LINTEL TYPE: G / M.O. = 6'-11 / LOC. : (RM 219) / FRAME TYPE: W16

PROCESS CONTROL
PROCESS BY
FAB: _____
FIT AND WELD: _____
INSPECTION: _____
OTHER (IF NEEDED) _____
_____ : _____
_____ : _____
_____ : _____
_____ : _____
_____ : _____
REFERENCE LATEST ERECTION DRAWINGS FOR MATERIAL & FABRICATION INFORMATION

5 - LINTELS - L53

DATE	NO.	DESCRIPTION	BY
5/28/11	B	For Checking	TMc
5/16/11	A	For Approval	TMc

BILL OF MATERIAL

Qty Ea.	Qty Tot	Piece Mark	Description	Length	Weight Total	Remarks	Adv Mill #	Steel Grade
	5	L53	LINTELS					
	5		HSS5X5X1/4	6'-5"	469	SQ-2 GALVANIZED		A992

STEEL ASTM	A992	UNO
ELECTRODES	E70XX L.H.	UNO
WELDS	1/4" FILLET	UNO
OPEN HOLES	13/16" UNO	FINISH PER SPECS
BOLTS	3/4" A325N	UNO
PAINT	1 S/C STD PRIMER U.N.O.	UNO

PROJECT NAME
OLDE ORCHARD ELEMENTARY SCHOOL
LOCATION
800 McNAUGHTEN RD. COLUMBUS, OHIO 43213
CONTRACTOR
THOMAS AND MARKER CONSTRUCTION
ARCHITECT
BRAUN & STEIDL

North Central Fabrication, Ltd.
NORTH CENTRAL FABRICATION
Mansfield, OH 44906
419-529-2744 FAX 419-529-5387 http://www.northcentralfab
AISC CERTIFIED FABRICATOR

DESCRIPTION	DATE	DATE	JOB No.
LINTEL	05/14/2011		70234
	DRAWN BY TMc	CHECKED BY TAN	DRG No. L53

PHASE				
1	2	3	4	5
3	0	0	0	0

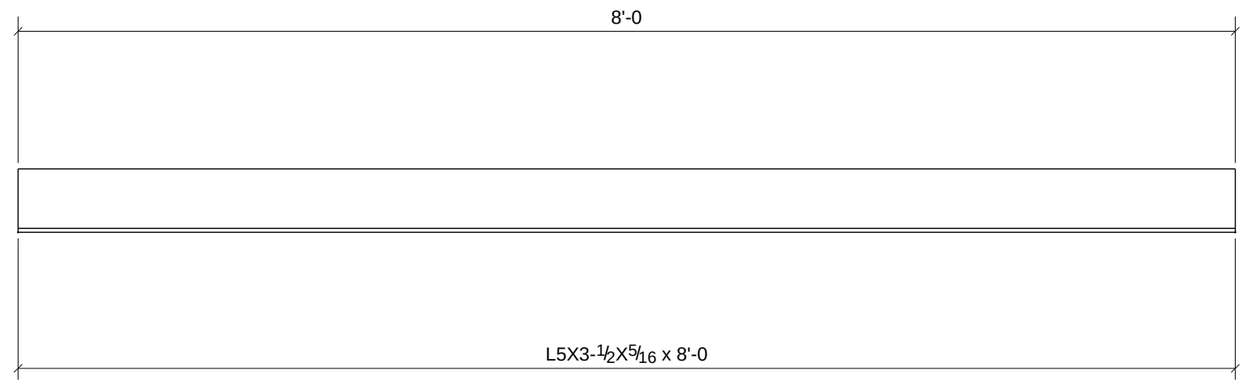

LINTEL TYPE: C3 / M.O. = 6'-8 / LOC. : (RM 117) / FRAME TYPE: W9

PROCESS CONTROL
PROCESS BY
FAB: _____
FIT AND WELD: _____
INSPECTION: _____
OTHER (IF NEEDED)
_____ : _____
_____ : _____
_____ : _____
_____ : _____
_____ : _____
REFERENCE LATEST ERECTION DRAWINGS FOR MATERIAL & FABRICATION INFORMATION

SHOP NOTE: (LINTEL TYPE INDICATES 2 OR 3 ANGLES FOR EACH LINTEL)

3 - LINTELS - L54

DATE	NO.	DESCRIPTION	BY
5/28/11	B	For Checking	TMc
5/16/11	A	For Approval	TMc

BILL OF MATERIAL

Qty Ea.	Qty Tot	Piece Mark	Description	Length	Weight Total	Remarks	Adv Mill #	Steel Grade
	3	L54	LINTELS					
	3		L5X3-1/2X5/16	8'-0"	209	SQ-2 GALVANIZED		A36

STEEL ASTM	A992	UNO
ELECTRODES	E70XX L.H.	UNO
WELDS	1/4" FILLET	UNO
OPEN HOLES	13/16" UNO	FINISH PER SPECS
BOLTS	3/4" A325N	UNO
PAINT	1 S/C STD PRIMER U.N.O.	UNO

PROJECT NAME
OLDE ORCHARD ELEMENTARY SCHOOL

LOCATION
800 McNAUGHTEN RD. COLUMBUS, OHIO 43213

CONTRACTOR
THOMAS AND MARKER CONSTRUCTION

ARCHITECT
BRAUN & STEIDL

North Central Fabrication, Ltd.
NORTH CENTRAL FABRICATION
Mansfield, OH 44906
419-529-2744 FAX 419-529-5387 http://www.northcentralfab
AISC CERTIFIED FABRICATOR

DESCRIPTION	DATE	DATE	JOB No.
LINTEL	05/14/2011		70234
	DRAWN BY TMc	CHECKED BY TAN	DRG No. L54

PHASE				
1	2	3	4	5
3	0	0	0	0

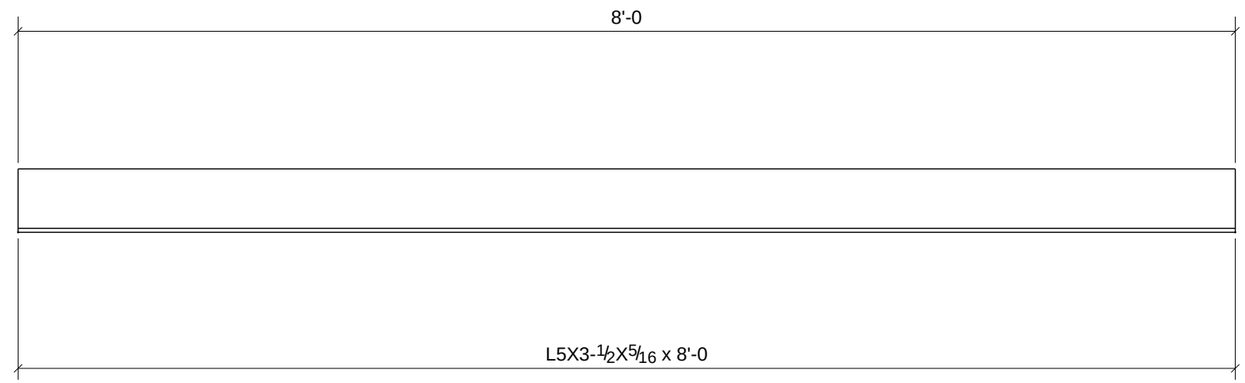

LINTEL TYPE: C3 / M.O. = 6'-8 / LOC. : (RM 217) / FRAME TYPE: W9

PROCESS CONTROL
PROCESS BY
FAB: _____
FIT AND WELD: _____
INSPECTION: _____
OTHER (IF NEEDED)
_____ : _____
_____ : _____
_____ : _____
_____ : _____
_____ : _____
REFERENCE LATEST ERECTION DRAWINGS FOR MATERIAL & FABRICATION INFORMATION

SHOP NOTE: (LINTEL TYPE INDICATES 2 OR 3 ANGLES FOR EACH LINTEL)

3 - LINTELS - L55

DATE	NO.	DESCRIPTION	BY
5/28/11	B	For Checking	TMc
5/16/11	A	For Approval	TMc

BILL OF MATERIAL

Qty Ea.	Qty Tot	Piece Mark	Description	Length	Weight Total	Remarks	Adv Mill #	Steel Grade
	3	L55	LINTELS					
	3		L5X3-1/2X5/16	8'-0"	209	SQ-2		A36

STEEL ASTM	A992	UNO
ELECTRODES	E70XX L.H.	UNO
WELDS	1/4" FILLET	UNO
OPEN HOLES	13/16" UNO	FINISH PER SPECS
BOLTS	3/4" A325N	UNO
PAINT	1 S/C STD PRIMER U.N.O.	UNO

PROJECT NAME
OLDE ORCHARD ELEMENTARY SCHOOL

LOCATION
800 McNAUGHTEN RD. COLUMBUS, OHIO 43213

CONTRACTOR
THOMAS AND MARKER CONSTRUCTION

ARCHITECT
BRAUN & STEIDL

North Central Fabrication, Ltd.
NORTH CENTRAL FABRICATION
Mansfield, OH 44906
419-529-2744 FAX 419-529-5387 http://www.northcentralfab
AISC CERTIFIED FABRICATOR

DESCRIPTION	DATE	DATE	JOB No.
LINTEL	05/14/2011		70234
	DRAWN BY TMc	CHECKED BY TAN	DRG No. L55

PHASE				
1	2	3	4	5
3	0	0	0	0

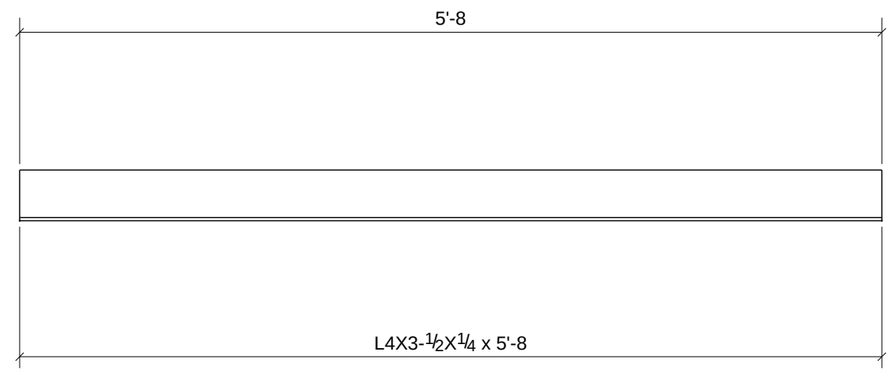

LINTEL TYPE: B3 / M.O. = 4'-4 / LOC. : (RM 115) / FRAME TYPE: W2

PROCESS CONTROL
PROCESS BY
FAB: _____
FIT AND WELD: _____
INSPECTION: _____
OTHER (IF NEEDED) _____
_____ : _____
_____ : _____
_____ : _____
_____ : _____
_____ : _____
REFERENCE LATEST ERECTION DRAWINGS FOR MATERIAL & FABRICATION INFORMATION

SHOP NOTE: (LINTEL TYPE INDICATES 2 OR 3 ANGLES FOR EACH LINTEL)

3 - LINTELS - L56

DATE	NO.	DESCRIPTION	BY
5/28/11	B	For Checking	TMc
5/16/11	A	For Approval	TMc

BILL OF MATERIAL

Qty Ea.	Qty Tot	Piece Mark	Description	Length	Weight Total	Remarks	Adv Mill #	Steel Grade
	3	L56	LINTELS					
	3		L4X3-1/2X1/4	5'-8"	105	SQ-2		A36

STEEL ASTM	A992	UNO
ELECTRODES	E70XX L.H.	UNO
WELDS	1/4" FILLET	UNO
OPEN HOLES	13/16" UNO	FINISH PER SPECS
BOLTS	3/4" A325N	UNO
PAINT	1 S/C STD PRIMER U.N.O.	UNO

PROJECT NAME
OLDE ORCHARD ELEMENTARY SCHOOL

LOCATION
800 McNAUGHTEN RD. COLUMBUS, OHIO 43213

CONTRACTOR
THOMAS AND MARKER CONSTRUCTION

ARCHITECT
BRAUN & STEIDL

North Central Fabrication, Ltd.
NORTH CENTRAL FABRICATION
Mansfield, OH 44906
419-529-2744 FAX 419-529-5387 http://www.northcentralfab
AISC CERTIFIED FABRICATOR

DESCRIPTION	DATE	DATE	JOB No.
LINTEL	05/14/2011		70234
	DRAWN BY TMc	CHECKED BY TAN	DRG No. L56

PHASE				
1	2	3	4	5
3	0	0	0	0

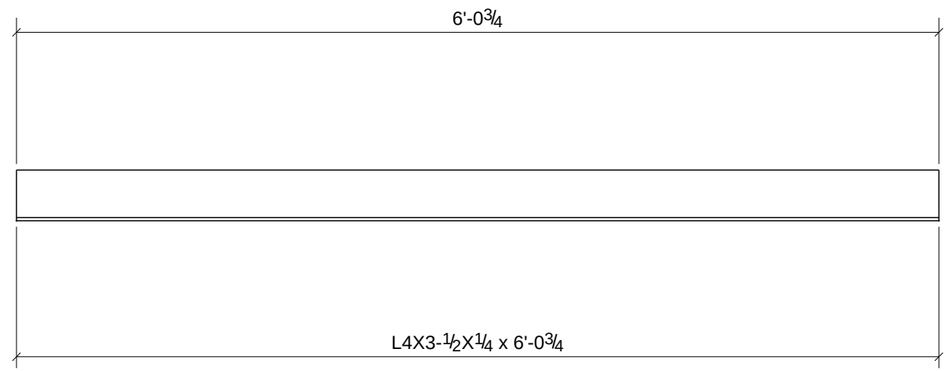

LINTEL TYPE: B3 / M.O. = 4'-8-3/4 / LOC. : (RM 113) / FRAME TYPE: W23

PROCESS CONTROL
PROCESS BY
FAB: _____
FIT AND WELD: _____
INSPECTION: _____
OTHER (IF NEEDED)
_____ : _____
_____ : _____
_____ : _____
_____ : _____
_____ : _____
REFERENCE LATEST ERECTION DRAWINGS FOR MATERIAL & FABRICATION INFORMATION

SHOP NOTE: (LINTEL TYPE INDICATES 2 OR 3 ANGLES FOR EACH LINTEL)

3 - LINTELS - L57

DATE	NO.	DESCRIPTION	BY
5/28/11	B	For Checking	TMc
5/16/11	A	For Approval	TMc

BILL OF MATERIAL

Qty Ea.	Qty Tot	Piece Mark	Description	Length	Weight Total	Remarks	Adv Mill #	Steel Grade
	3	L57	LINTELS					
	3		L4X3-1/2X1/4	6'-0 3/4"	112	SQ-2 GALVANIZED		A36

STEEL ASTM	A992	UNO
ELECTRODES	E70XX L.H.	UNO
WELDS	1/4" FILLET	UNO
OPEN HOLES	13/16" UNO	FINISH PER SPECS
BOLTS	3/4" A325N	UNO
PAINT	1 S/C STD PRIMER U.N.O.	UNO

PROJECT NAME
OLDE ORCHARD ELEMENTARY SCHOOL

LOCATION
800 McNAUGHTEN RD. COLUMBUS, OHIO 43213

CONTRACTOR
THOMAS AND MARKER CONSTRUCTION

ARCHITECT
BRAUN & STEIDL

North Central Fabrication, Ltd.

NORTH CENTRAL FABRICATION
Mansfield, OH 44906
419-529-2744 FAX 419-529-5387 http://www.northcentralfab

AISC CERTIFIED FABRICATOR

DESCRIPTION	DATE	DATE	JOB No.
LINTEL	05/14/2011		70234
	DRAWN BY TMc	CHECKED BY TAN	DRG No. L57

PHASE				
1	2	3	4	5
1	0	0	0	0

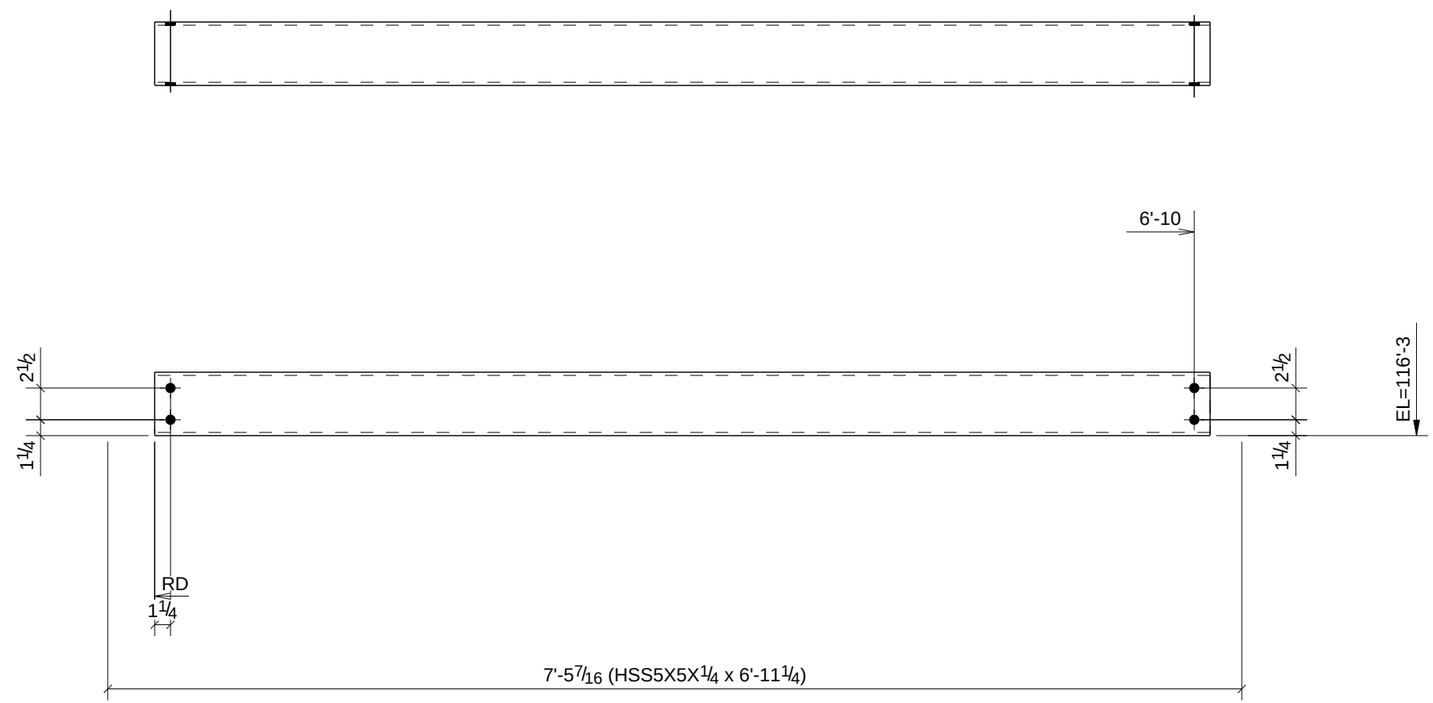

LINTEL TYPE: / M.O. = / LOC. : ( ) / FRAME TYPE:

LINTEL TYPE: E / M.O.= 11'-5 /LOC: (RM 224) / FRAME TYPE: W16

PROCESS CONTROL
PROCESS BY
FAB: _____
FIT AND WELD: _____
INSPECTION: _____
OTHER (IF NEEDED) _____
_____ : _____
_____ : _____
_____ : _____
_____ : _____
_____ : _____
REFERENCE LATEST ERECTION DRAWINGS FOR MATERIAL & FABRICATION INFORMATION

ONE - LINTEL - L58

DATE	NO.	DESCRIPTION	BY
5/28/11	B	For Checking	TMc
5/16/11	A	For Approval	TMc

BILL OF MATERIAL

Qty Ea.	Qty Tot	Piece Mark	Description	Length	Weight Total	Remarks	Adv Mill #	Steel Grade
	1	L58	LINTEL					
	1		HSS5X5X1/4	6'-11 1/4"	102	SQ-2 GALVANIZED		A992

STEEL ASTM	A992	UNO
ELECTRODES	E70XX L.H.	UNO
WELDS	1/4" FILLET	UNO
OPEN HOLES	13/16" UNO	FINISH PER SPECS
BOLTS	3/4" A325N	UNO
PAINT	1 S/C STD PRIMER U.N.O.	UNO

PROJECT NAME
OLDE ORCHARD ELEMENTARY SCHOOL

LOCATION
800 McNAUGHTEN RD. COLUMBUS, OHIO 43213

CONTRACTOR
THOMAS AND MARKER CONSTRUCTION

ARCHITECT
BRAUN & STEIDL

North Central Fabrication, Ltd.
NORTH CENTRAL FABRICATION
Mansfield, OH 44906
419-529-2744 FAX 419-529-5387 http://www.northcentralfab
AISC CERTIFIED FABRICATOR

DESCRIPTION	DATE	DATE	JOB No.
LINTEL	05/14/2011		70234
	DRAWN BY TMc	CHECKED BY TAN	DRG No. L58

PHASE				
1	2	3	4	5
3	0	0	0	0

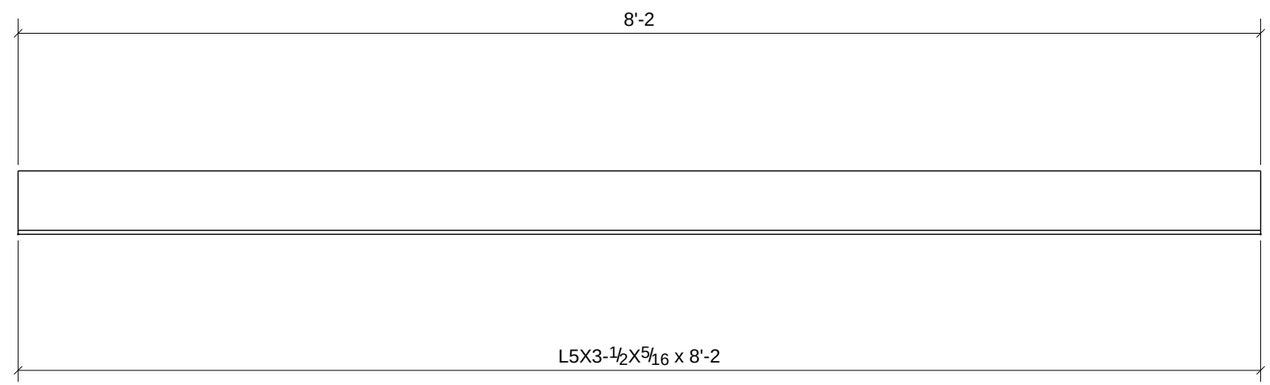

LINTEL TYPE: C3 / M.O. = 7'-0 / LOC. : (RM 113) / FRAME TYPE: W24

PROCESS CONTROL
PROCESS BY
FAB: _____
FIT AND WELD: _____
INSPECTION: _____
OTHER (IF NEEDED)
_____ : _____
_____ : _____
_____ : _____
_____ : _____
_____ : _____
REFERENCE LATEST ERECTION DRAWINGS FOR MATERIAL & FABRICATION INFORMATION

SHOP NOTE: (LINTEL TYPE INDICATES 2 OR 3 ANGLES FOR EACH LINTEL)

3 - LINTELS - L59

DATE	NO.	DESCRIPTION	BY
5/28/11	B	For Checking	TMc
5/16/11	A	For Approval	TMc

BILL OF MATERIAL

Qty Ea.	Qty Tot	Piece Mark	Description	Length	Weight Total	Remarks	Adv Mill #	Steel Grade
	3	L59	LINTELS					
	3		L5X3-1/2X5/16	8'-2"	213	SQ-2 GALVANIZED		A36

STEEL ASTM	A992	UNO
ELECTRODES	E70XX L.H.	UNO
WELDS	1/4" FILLET	UNO
OPEN HOLES	13/16" UNO	FINISH PER SPECS
BOLTS	3/4" A325N	UNO
PAINT	1 S/C STD PRIMER U.N.O.	UNO

PROJECT NAME
OLDE ORCHARD ELEMENTARY SCHOOL

LOCATION
800 McNAUGHTEN RD. COLUMBUS, OHIO 43213

CONTRACTOR
THOMAS AND MARKER CONSTRUCTION

ARCHITECT
BRAUN & STEIDL

North Central Fabrication, Ltd.

NORTH CENTRAL FABRICATION
Mansfield, OH 44906
419-529-2744 FAX 419-529-5387 http://www.northcentralfab

AISC CERTIFIED FABRICATOR

DESCRIPTION	DATE	DATE	JOB No.
LINTEL	05/14/2011		70234
	DRAWN BY TMc	CHECKED BY TAN	DRG No. L59

PHASE				
1	2	3	4	5
12	0	0	0	0

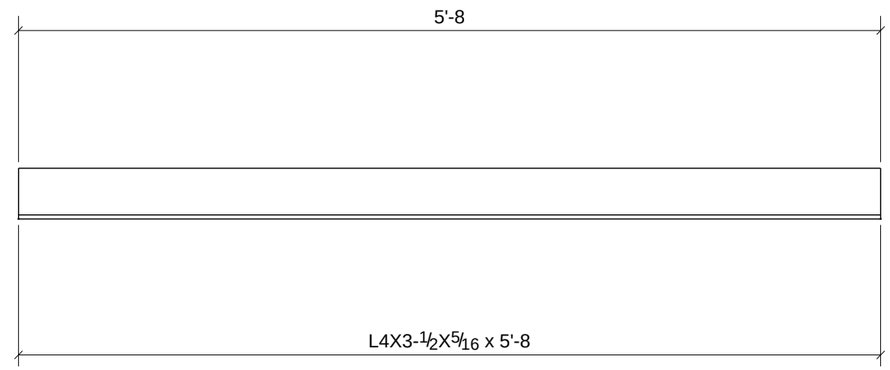

LINTEL TYPE: B3 / M.O. = 4'-4 / LOC. : (RM 111) / FRAME TYPE: W2
LINTEL TYPE: B3 / M.O.= 4'-4 /LOC: (RM 109) / FRAME TYPE: W2
LINTEL TYPE: B3 / M.O.= 4'-4 /LOC: (RM 107) / FRAME TYPE: W2
LINTEL TYPE: B3 / M.O.= 4'-4 /LOC: (RM 105) / FRAME TYPE: W2

PROCESS CONTROL
PROCESS BY
FAB: _____
FIT AND WELD: _____
INSPECTION: _____
OTHER (IF NEEDED) _____
_____ : _____
_____ : _____
_____ : _____
_____ : _____
REFERENCE LATEST ERECTION DRAWINGS FOR MATERIAL & FABRICATION INFORMATION

SHOP NOTE: (LINTEL TYPE INDICATES 2 OR 3 ANGLES FOR EACH LINTEL)

12 - LINTELS - L62

DATE	NO.	DESCRIPTION	BY
5/28/11	B	For Checking	TMc
5/16/11	A	For Approval	TMc

BILL OF MATERIAL

Qty Ea.	Qty Tot	Piece Mark	Description	Length	Weight Total	Remarks	Adv Mill #	Steel Grade
	12	L62	LINTELS					
	12		L4X3-1/2X5/16	5'-8"	521	SQ-2 GALVANIZED		A36

STEEL ASTM	A992	UNO
ELECTRODES	E70XX L.H.	UNO
WELDS	1/4" FILLET	UNO
OPEN HOLES	13/16" UNO	FINISH PER SPECS
BOLTS	3/4" A325N	UNO
PAINT	1 S/C STD PRIMER U.N.O.	UNO

PROJECT NAME
OLDE ORCHARD ELEMENTARY SCHOOL
LOCATION
800 McNAUGHTEN RD. COLUMBUS, OHIO 43213
CONTRACTOR
THOMAS AND MARKER CONSTRUCTION
ARCHITECT
BRAUN & STEIDL

North Central Fabrication, Ltd.
NORTH CENTRAL FABRICATION
Mansfield, OH 44906
419-529-2744 FAX 419-529-5387 http://www.northcentralfab
AISC CERTIFIED FABRICATOR

DESCRIPTION	DATE	DATE	JOB No.
LINTEL	05/14/2011		70234
	DRAWN BY TMc	CHECKED BY TAN	DRG No. L62

PHASE				
1	2	3	4	5
1	0	0	0	0

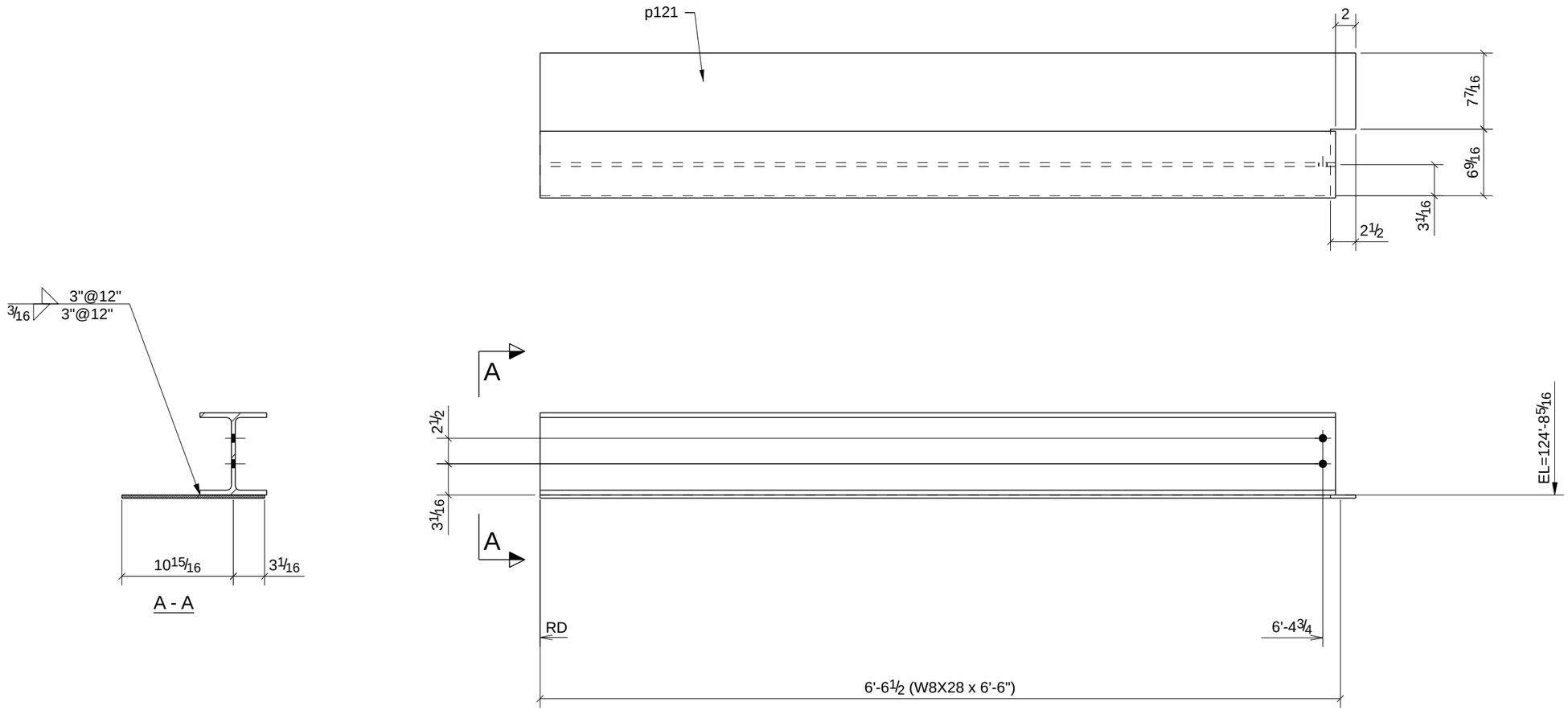

LINTEL TYPE: E / M.O. = 6'-7 / LOC. : (RM 207) / FRAME TYPE: W7

PROCESS CONTROL
PROCESS BY
FAB: _____
FIT AND WELD: _____
INSPECTION: _____
OTHER (IF NEEDED) _____
_____ : _____
_____ : _____
_____ : _____
_____ : _____
REFERENCE LATEST ERECTION DRAWINGS FOR MATERIAL & FABRICATION INFORMATION

ONE - LINTEL - L64

W	8 1/16" x 1/4"
F	6 9/16" x 7/16"

DATE	NO.	DESCRIPTION	BY
5/28/11	B	For Checking	TMc
5/16/11	A	For Approval	TMc

BILL OF MATERIAL

Qty Ea.	Qty Tot	Piece Mark	Description	Length	Weight Total	Remarks	Adv Mill #	Steel Grade
	1	L64	LINTEL					
	1		W8X28	6'-6"	182	SQ-2		A36
	1	p121	PL5/16"X14"	6'-8"	98			A36

STEEL ASTM	A992	UNO
ELECTRODES	E70XX L.H.	UNO
WELDS	1/4" FILLET	UNO
OPEN HOLES	13/16" UNO	FINISH PER SPECS
BOLTS	3/4" A325N	UNO
PAINT	1 S/C STD PRIMER U.N.O.	UNO

PROJECT NAME
OLDE ORCHARD ELEMENTARY SCHOOL

LOCATION
800 McNAUGHTEN RD. COLUMBUS, OHIO 43213

CONTRACTOR
THOMAS AND MARKER CONSTRUCTION

ARCHITECT
BRAUN & STEIDL

North Central Fabrication, Ltd.
NORTH CENTRAL FABRICATION
Mansfield, OH 44906
419-529-2744 FAX 419-529-5387 http://www.northcentralfab
AISC CERTIFIED FABRICATOR

DESCRIPTION	DATE	DATE	JOB No.
LINTEL	05/14/2011		70234
	DRAWN BY TMc	CHECKED BY TAN	DRG No. L64

PHASE				
1	2	3	4	5
1	0	0	0	0

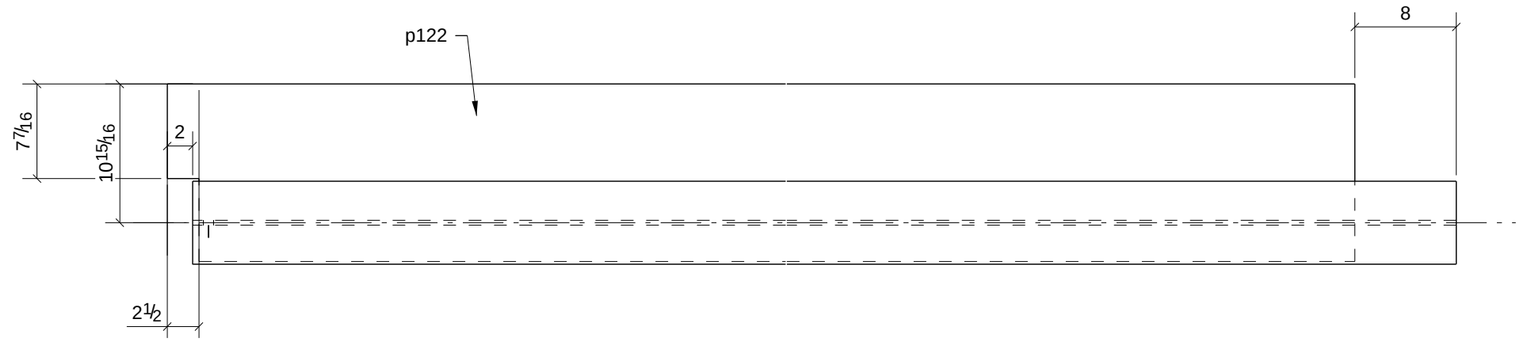

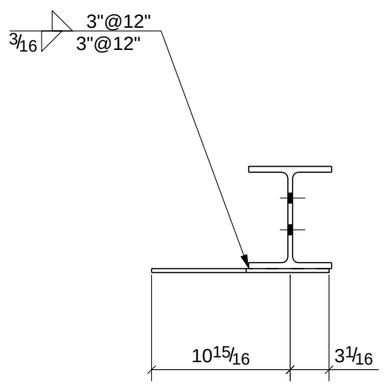

A - A

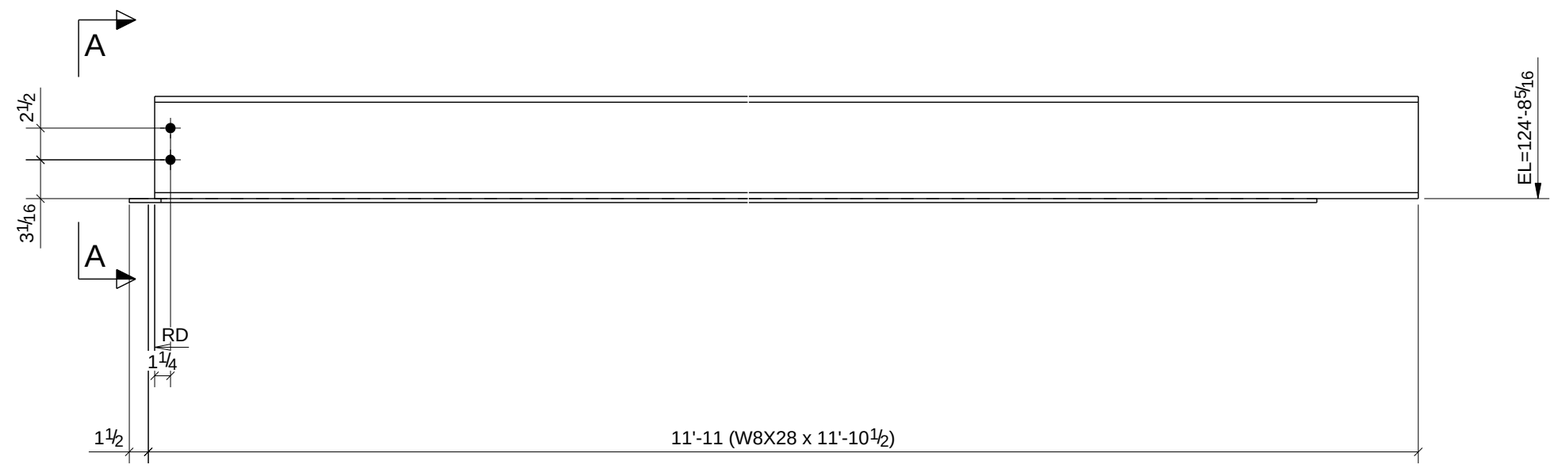

LINTEL TYPE: E / M.O. = 11'-5 / LOC. : (RM 207) / FRAME TYPE: W7

PROCESS CONTROL
PROCESS BY
FAB: _____
FIT AND WELD: _____
INSPECTION: _____
OTHER (IF NEEDED) _____
_____ : _____
_____ : _____
_____ : _____
_____ : _____
REFERENCE LATEST ERECTION DRAWINGS FOR MATERIAL & FABRICATION INFORMATION

ONE - LINTEL - L65

W	8 1/16" x 1/4"
F	6 9/16" x 7/16"

DATE	NO.	DESCRIPTION	BY
5/28/11	B	For Checking	TMc
5/16/11	A	For Approval	TMc

BILL OF MATERIAL

Qty Ea.	Qty Tot	Piece Mark	Description	Length	Weight Total	Remarks	Adv Mill #	Steel Grade
	1	L65	LINTEL					
	1		W8X28	11'-10 1/2"	333	SQ-2		A36
	1	p122	PL5/16"X14"	11'-4 1/2"	168			A36

STEEL ASTM	A992	UNO
ELECTRODES	E70XX L.H.	UNO
WELDS	1/4" FILLET	UNO
OPEN HOLES	13/16" UNO	FINISH PER SPECS
BOLTS	3/4" A325N	UNO
PAINT	1 S/C STD PRIMER U.N.O.	UNO

PROJECT NAME
OLDE ORCHARD ELEMENTARY SCHOOL

LOCATION
800 McNAUGHTEN RD. COLUMBUS, OHIO 43213

CONTRACTOR
THOMAS AND MARKER CONSTRUCTION

ARCHITECT
BRAUN & STEIDL

North Central Fabrication, Ltd.
NORTH CENTRAL FABRICATION
Mansfield, OH 44906
419-529-2744 FAX 419-529-5387 http://www.northcentralfab
AISC CERTIFIED FABRICATOR

DESCRIPTION	DATE	DATE	JOB No.
LINTEL	05/14/2011		70234
	DRAWN BY TMc	CHECKED BY TAN	DRG No. L65

PHASE				
1	2	3	4	5
2	0	0	0	0

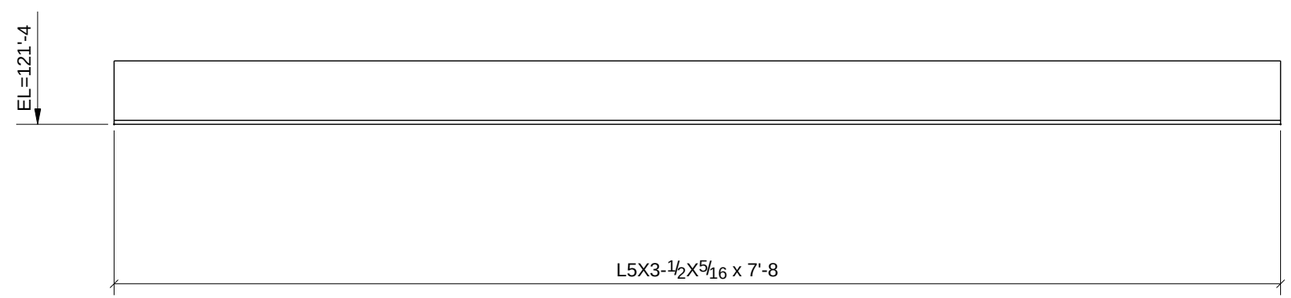

LINTEL TYPE: C2 / M.O. = 6'-4 / LOC. : (RM M238) / FRAME TYPE: J

PROCESS CONTROL
PROCESS BY
FAB: _____
FIT AND WELD: _____
INSPECTION: _____
OTHER (IF NEEDED)
_____ : _____
_____ : _____
_____ : _____
_____ : _____
REFERENCE LATEST ERECTION DRAWINGS FOR MATERIAL & FABRICATION INFORMATION

SHOP NOTE: (LINTEL TYPE INDICATES 2 OR 3 ANGLES FOR EACH LINTEL)

2 - LINTELS - L69

DATE	NO.	DESCRIPTION	BY
5/28/11	B	For Checking	TMc
5/16/11	A	For Approval	TMc

BILL OF MATERIAL

Qty Ea.	Qty Tot	Piece Mark	Description	Length	Weight Total	Remarks	Adv Mill #	Steel Grade
	2	L69	LINTELS					
	2		L5X3-1/2X5/16	7'-8"	134	SQ-2		A36

STEEL ASTM	A992	UNO
ELECTRODES	E70XX L.H.	UNO
WELDS	1/4" FILLET	UNO
OPEN HOLES	13/16" UNO	FINISH PER SPECS
BOLTS	3/4" A325N	UNO
PAINT	1 S/C STD PRIMER U.N.O.	UNO

PROJECT NAME
OLDE ORCHARD ELEMENTARY SCHOOL

LOCATION
800 McNAUGHTEN RD. COLUMBUS, OHIO 43213

CONTRACTOR
THOMAS AND MARKER CONSTRUCTION

ARCHITECT
BRAUN & STEIDL

North Central Fabrication, Ltd.

NORTH CENTRAL FABRICATION
Mansfield, OH 44906
419-529-2744 FAX 419-529-5387 http://www.northcentralfab

AISC CERTIFIED FABRICATOR

DESCRIPTION	DATE	DATE	JOB No.
LINTEL	05/14/2011		70234
	DRAWN BY TMc	CHECKED BY TAN	DRG No. L69

PHASE				
1	2	3	4	5
24	0	0	0	0

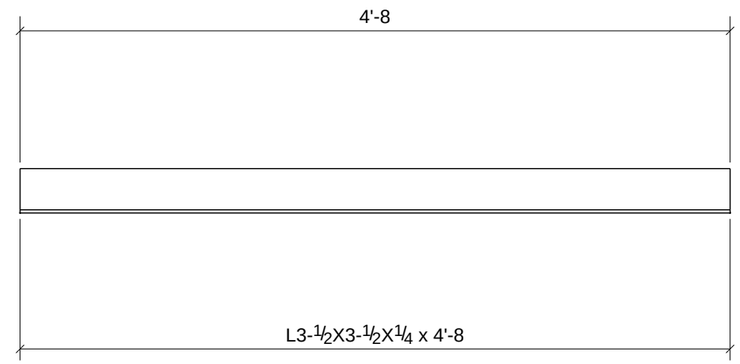

LINTEL TYPE: A2 / M.O. = 3'-4 / LOC. : (101A) / FRAME TYPE: F3

LINTEL TYPE: A2 / M.O.= 3'-4 /LOC: (RM M235) / FRAME TYPE: F3
LINTEL TYPE: A2 / M.O.= 3'-4 /LOC: (RM M235) / FRAME TYPE: F3
LINTEL TYPE: A2 / M.O.= 3'-4 /LOC: (RM M237B) / FRAME TYPE: F3
LINTEL TYPE: A2 / M.O.= 3'-4 /LOC: (RM M237A) / FRAME TYPE: F3
LINTEL TYPE: A2 / M.O.= 3'-4 /LOC: (RM M234) / FRAME TYPE: F3
LINTEL TYPE: A2 / M.O.= 3'-4 /LOC: (RM M239B) / FRAME TYPE: F3
LINTEL TYPE: A2 / M.O.= 3'-4 /LOC: (RM M239A) / FRAME TYPE: F3
LINTEL TYPE: A2 / M.O.= 3'-4 /LOC: (RM M241B) / FRAME TYPE: F3
LINTEL TYPE: A2 / M.O.= 3'-4 /LOC: (RM M239A) / FRAME TYPE: F3
LINTEL TYPE: A2 / M.O.= 3'-4 /LOC: (RM M243B) / FRAME TYPE: F3
LINTEL TYPE: A2 / M.O.= 3'-4 /LOC: (RM M243A) / FRAME TYPE: F3

PROCESS CONTROL
PROCESS BY
FAB: _____
FIT AND WELD: _____
INSPECTION: _____
OTHER (IF NEEDED) _____
_____ : _____
_____ : _____
_____ : _____
_____ : _____
REFERENCE LATEST ERECTION DRAWINGS FOR MATERIAL & FABRICATION INFORMATION

SHOP NOTE: (LINTEL TYPE INDICATES 2 OR 3 ANGLES FOR EACH LINTEL)

24 - LINTELS - L71

DATE	NO.	DESCRIPTION	BY
5/28/11	B	For Checking	TMc
5/16/11	A	For Approval	TMc

BILL OF MATERIAL

Qty Ea.	Qty Tot	Piece Mark	Description	Length	Weight Total	Remarks	Adv Mill #	Steel Grade
	24	L71	LINTELS					
	24		L3-1/2X3-1/2X1/4	4'-8"	644	SQ-2		A36

STEEL ASTM	A992	UNO
ELECTRODES	E70XX L.H.	UNO
WELDS	1/4" FILLET	UNO
OPEN HOLES	13/16" UNO	FINISH PER SPECS
BOLTS	3/4" A325N	UNO
PAINT	1 S/C STD PRIMER U.N.O.	UNO

PROJECT NAME
OLDE ORCHARD ELEMENTARY SCHOOL

LOCATION
800 McNAUGHTEN RD. COLUMBUS, OHIO 43213

CONTRACTOR
THOMAS AND MARKER CONSTRUCTION

ARCHITECT
BRAUN & STEIDL

North Central Fabrication, Ltd.
NORTH CENTRAL FABRICATION
Mansfield, OH 44906
419-529-2744 FAX 419-529-5387 http://www.northcentralfab
AISC CERTIFIED FABRICATOR

DESCRIPTION	DATE	DATE	JOB No.
LINTEL	05/14/2011		70234
	DRAWN BY TMc	CHECKED BY TAN	DRG No. L71

PHASE				
1	2	3	4	5
4	0	0	0	0

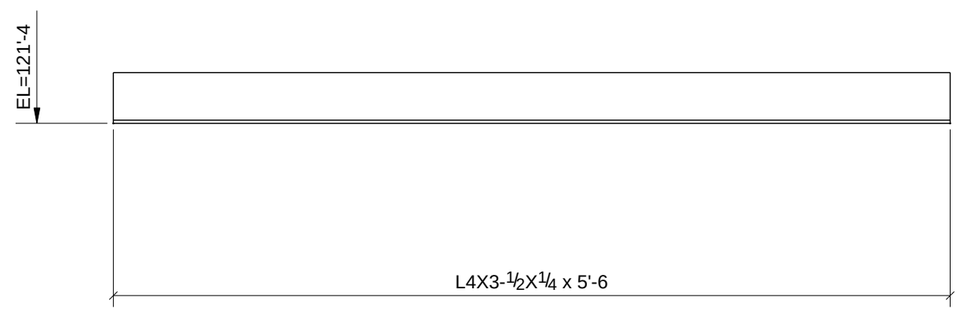

LINTEL TYPE: B2 / M.O. = 4'-2 / LOC. : (RM 219) / FRAME TYPE: F9
LINTEL TYPE: B2 / M.O.= 4'-2 /LOC: (RM 205) / FRAME TYPE: F9

PROCESS CONTROL
PROCESS BY
FAB: _____
FIT AND WELD: _____
INSPECTION: _____
OTHER (IF NEEDED) _____
_____ : _____
_____ : _____
_____ : _____
_____ : _____
REFERENCE LATEST ERECTION DRAWINGS FOR MATERIAL & FABRICATION INFORMATION

SHOP NOTE: (LINTEL TYPE INDICATES 2 OR 3 ANGLES FOR EACH LINTEL)

4 - LINTELS - L72

DATE	NO.	DESCRIPTION	BY
5/28/11	B	For Checking	TMc
5/16/11	A	For Approval	TMc

BILL OF MATERIAL

Qty Ea.	Qty Tot	Piece Mark	Description	Length	Weight Total	Remarks	Adv Mill #	Steel Grade
	4	L72	LINTELS					
	4		L4X3-1/2X1/4	5'-6"	136	SQ-2		A36

STEEL ASTM	A992	UNO
ELECTRODES	E70XX L.H.	UNO
WELDS	1/4" FILLET	UNO
OPEN HOLES	13/16" UNO	FINISH PER SPECS
BOLTS	3/4" A325N	UNO
PAINT	1 S/C STD PRIMER U.N.O.	UNO

PROJECT NAME
OLDE ORCHARD ELEMENTARY SCHOOL

LOCATION
800 McNAUGHTEN RD. COLUMBUS, OHIO 43213

CONTRACTOR
THOMAS AND MARKER CONSTRUCTION

ARCHITECT
BRAUN & STEIDL

North Central Fabrication, Ltd.
NORTH CENTRAL FABRICATION
Mansfield, OH 44906
419-529-2744 FAX 419-529-5387 http://www.northcentralfab
AISC CERTIFIED FABRICATOR

DESCRIPTION	DATE	DATE	JOB No.
LINTEL	05/14/2011		70234
	DRAWN BY TMc	CHECKED BY TAN	DRG No. L72

PHASE				
1	2	3	4	5
1	0	0	0	0

ON HOLD - FOR APPROVAL COMMENTS ONLY - DO NOT FABRICATE
WAITING FOR MECHANICAL OPENING INFORMATION
WAITING FOR JOIST DRAWINGS

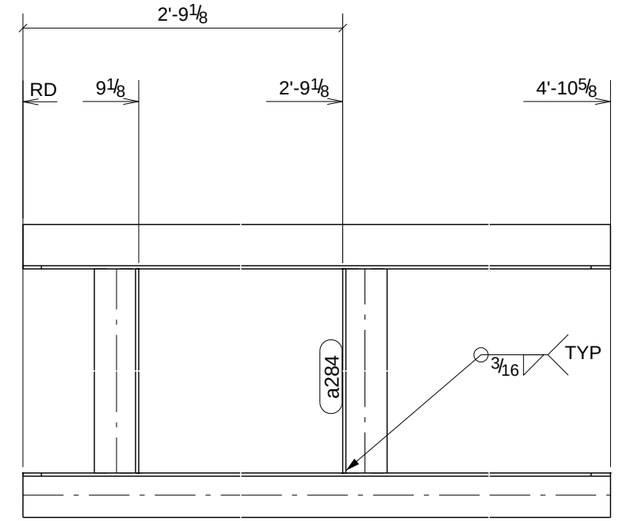

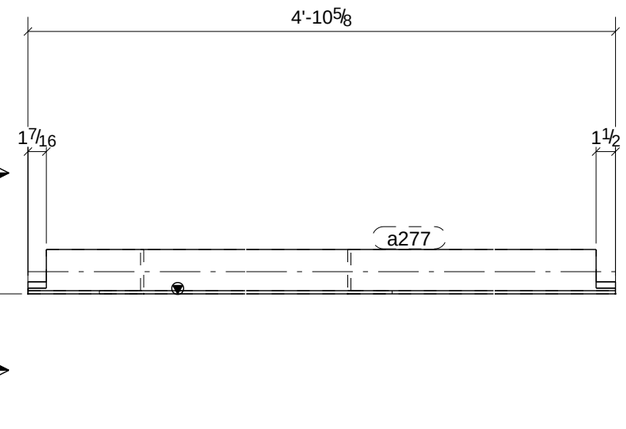

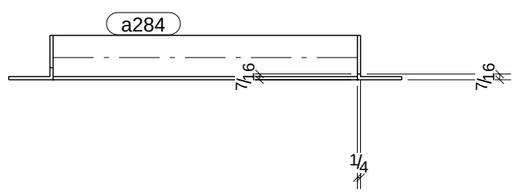

A - A

ONE - ROOF FRAME - RF1

PROCESS CONTROL
PROCESS BY
FAB: _____
FIT AND WELD: _____
INSPECTION: _____
OTHER (IF NEEDED) _____
_____ : _____
_____ : _____
_____ : _____
_____ : _____
REFERENCE LATEST ERECTION DRAWINGS FOR MATERIAL & FABRICATION INFORMATION

BILL OF MATERIAL

Qty Ea.	Qty Tot	Piece Mark	Description	Length	Weight Total	Remarks	Adv Mill #	Steel Grade
	1	RF1	ROOF FRAME					
	1		L3-1/2X3-1/2X1/4	4'-10 5/8"	28	SQ-2		A36
	1	a277	L3-1/2X3-1/2X1/4	4'-10 5/8"	28			A36
	2	a284	L3-1/2X3-1/2X1/4	2'-0"	23			A36

STEEL ASTM	A992	UNO
ELECTRODES	E70XX L.H.	UNO
WELDS	1/4" FILLET	UNO
OPEN HOLES	13/16" UNO	FINISH PER SPECS
BOLTS	3/4" A325N	UNO
PAINT	1 S/C STD PRIMER U.N.O.	UNO

PROJECT NAME
OLDE ORCHARD ELEMENTARY SCHOOL
LOCATION
800 McNAUGHTEN RD. COLUMBUS, OHIO 43213
CONTRACTOR
THOMAS AND MARKER CONSTRUCTION
ARCHITECT
BRAUN & STEIDL

DATE	NO.	DESCRIPTION	BY
5/28/11	B	For Checking	TMc
5/16/11	A	For Approval	TMc

North Central Fabrication, Ltd.

NORTH CENTRAL FABRICATION
Mansfield, OH 44906
419-529-2744 FAX 419-529-5387 http://www.northcentralfab

AISC CERTIFIED FABRICATOR

DESCRIPTION	DATE	DATE	JOB No.
ROOF FRAME	05/19/2011		70234
	DRAWN BY TMc	CHECKED BY TAN	DRG No. RF1

PHASE				
1	2	3	4	5
1	0	0	0	0

ON HOLD - FOR APPROVAL COMMENTS ONLY - DO NOT FABRICATE
WAITING FOR MECHANICAL OPENING INFORMATION
WAITING FOR JOIST DRAWINGS

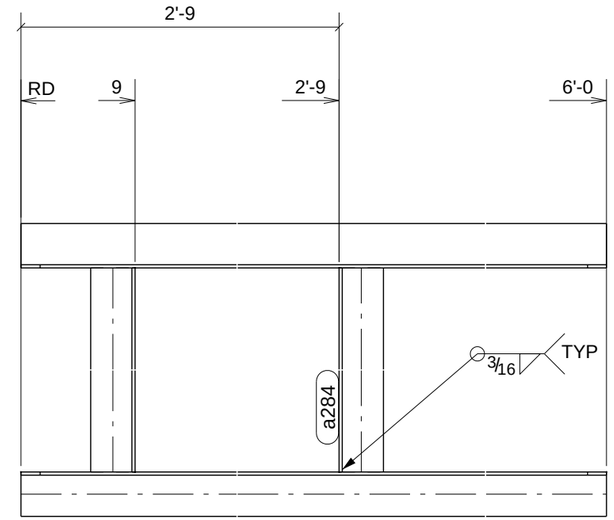

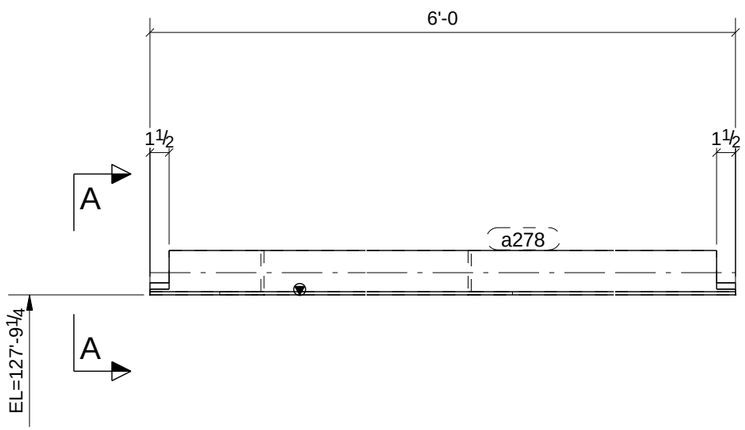

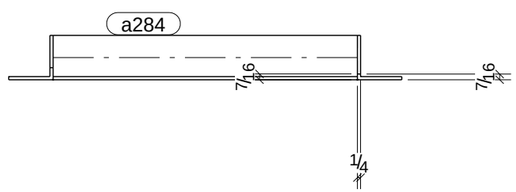

A - A

PROCESS CONTROL
PROCESS BY
FAB: _____
FIT AND WELD: _____
INSPECTION: _____
OTHER (IF NEEDED) _____
_____ : _____
_____ : _____
_____ : _____
_____ : _____
REFERENCE LATEST ERECTION DRAWINGS FOR MATERIAL & FABRICATION INFORMATION

ONE - ROOF FRAME - RF2

BILL OF MATERIAL

Qty Ea.	Qty Tot	Piece Mark	Description	Length	Weight Total	Remarks	Adv Mill #	Steel Grade
	1	RF2	ROOF FRAME					
	1		L3-1/2X3-1/2X1/4	6'-0"	35	SQ-2		A36
	1	a278	L3-1/2X3-1/2X1/4	6'-0"	35			A36
	2	a284	L3-1/2X3-1/2X1/4	2'-0"	23			A36

STEEL ASTM	A992	UNO
ELECTRODES	E70XX L.H.	UNO
WELDS	1/4" FILLET	UNO
OPEN HOLES	13/16" UNO	FINISH PER SPECS
BOLTS	3/4" A325N	UNO
PAINT	1 S/C STD PRIMER U.N.O.	UNO

PROJECT NAME
OLDE ORCHARD ELEMENTARY SCHOOL
LOCATION
800 McNAUGHTEN RD. COLUMBUS, OHIO 43213
CONTRACTOR
THOMAS AND MARKER CONSTRUCTION
ARCHITECT
BRAUN & STEIDL

DATE	NO.	DESCRIPTION	BY
5/28/11	B	For Checking	TMc
5/16/11	A	For Approval	TMc

North Central Fabrication, Ltd.

NORTH CENTRAL FABRICATION
Mansfield, OH 44906
419-529-2744 FAX 419-529-5387 http://www.northcentralfab

AISC CERTIFIED FABRICATOR

DESCRIPTION	DATE	DATE	JOB No.
ROOF FRAME	05/19/2011		70234
	DRAWN BY TMc	CHECKED BY TAN	DRG No. RF2

PHASE				
1	2	3	4	5
1	0	0	0	0

ON HOLD - FOR APPROVAL COMMENTS ONLY - DO NOT FABRICATE
WAITING FOR MECHANICAL OPENING INFORMATION
WAITING FOR JOIST DRAWINGS

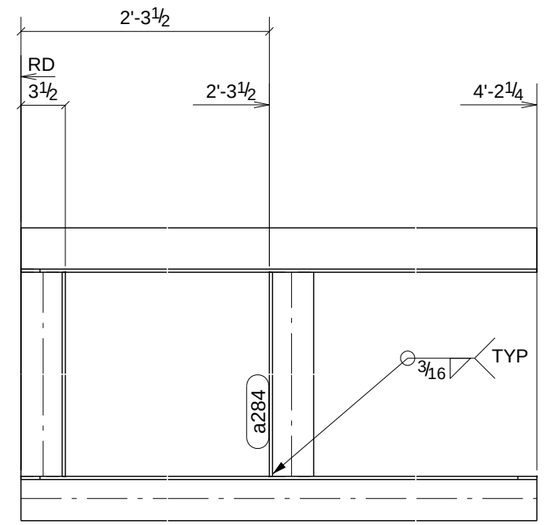

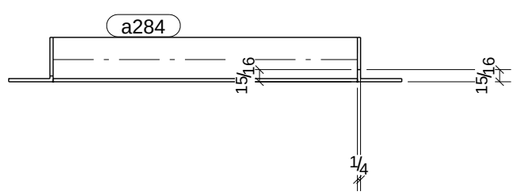

A - A

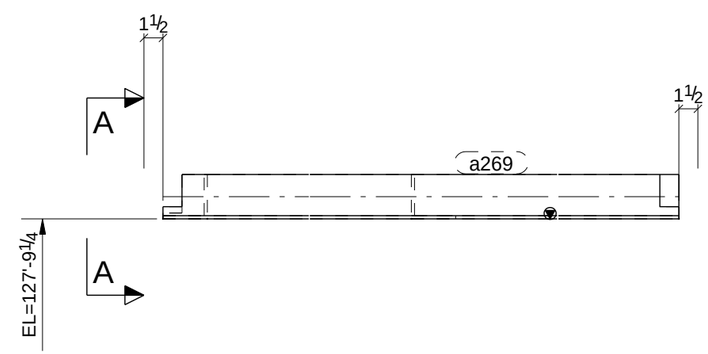

ONE - ROOF FRAME - RF3

PROCESS CONTROL
PROCESS BY
FAB: _____
FIT AND WELD: _____
INSPECTION: _____
OTHER (IF NEEDED) _____
_____ : _____
_____ : _____
_____ : _____
_____ : _____
_____ : _____
REFERENCE LATEST ERECTION DRAWINGS FOR MATERIAL & FABRICATION INFORMATION

BILL OF MATERIAL

Qty Ea.	Qty Tot	Piece Mark	Description	Length	Weight Total	Remarks	Adv Mill #	Steel Grade
	1	RF3	ROOF FRAME					
	1		L3-1/2X3-1/2X1/4	4'-2 1/4"	24	SQ-2		A36
	1	a269	L3-1/2X3-1/2X1/4	4'-2 1/4"	24			A36
	2	a284	L3-1/2X3-1/2X1/4	2'-0"	23			A36

STEEL ASTM	A992	UNO
ELECTRODES	E70XX L.H.	UNO
WELDS	1/4" FILLET	UNO
OPEN HOLES	13/16" UNO	FINISH PER SPECS
BOLTS	3/4" A325N	UNO
PAINT	1 S/C STD PRIMER U.N.O.	UNO

PROJECT NAME
OLDE ORCHARD ELEMENTARY SCHOOL
LOCATION
800 McNAUGHTEN RD. COLUMBUS, OHIO 43213
CONTRACTOR
THOMAS AND MARKER CONSTRUCTION
ARCHITECT
BRAUN & STEIDL

DATE	NO.	DESCRIPTION	BY
5/28/11	B	For Checking	TMc
5/16/11	A	For Approval	TMc

North Central Fabrication, Ltd.
NORTH CENTRAL FABRICATION
Mansfield, OH 44906
419-529-2744 FAX 419-529-5387 http://www.northcentralfab
AISC CERTIFIED FABRICATOR

DESCRIPTION	DATE	DATE	JOB No.
ROOF FRAME	05/19/2011		70234
	DRAWN BY TMc	CHECKED BY TAN	DRG No. RF3

PHASE				
1	2	3	4	5
3	0	0	0	0

ON HOLD - FOR APPROVAL COMMENTS ONLY - DO NOT FABRICATE
WAITING FOR MECHANICAL OPENING INFORMATION
WAITING FOR JOIST DRAWINGS

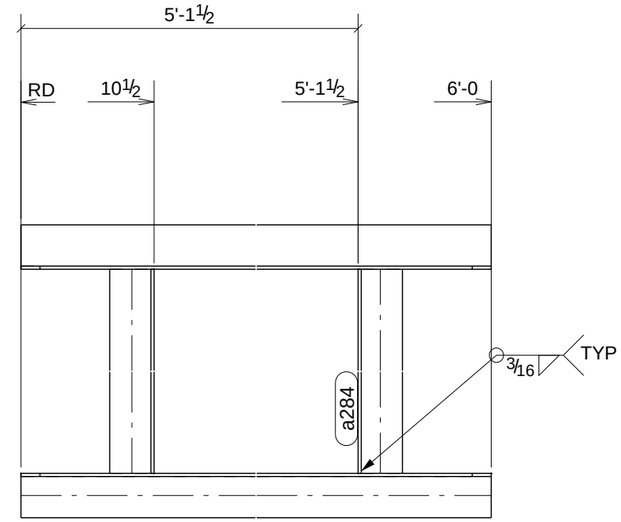

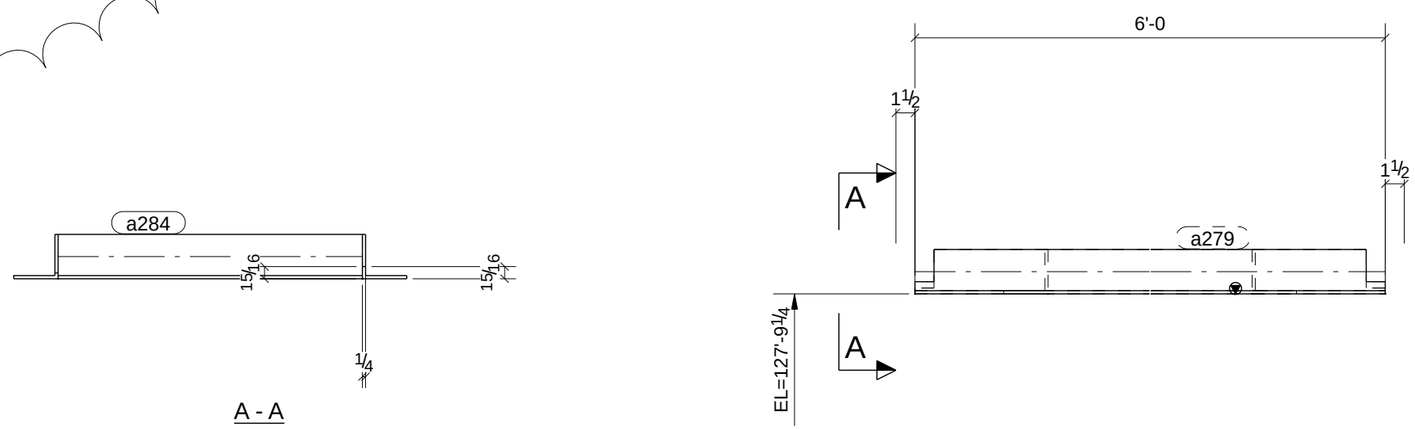

A - A

3 - ROOF FRAMES - RF4

PROCESS CONTROL
PROCESS BY
FAB: _____
FIT AND WELD: _____
INSPECTION: _____
OTHER (IF NEEDED) _____
_____ : _____
_____ : _____
_____ : _____
_____ : _____
REFERENCE LATEST ERECTION DRAWINGS FOR MATERIAL & FABRICATION INFORMATION

BILL OF MATERIAL

Qty Ea.	Qty Tot	Piece Mark	Description	Length	Weight Total	Remarks	Adv Mill #	Steel Grade
	3	RF4	ROOF FRAMES					
	3		L3-1/2X3-1/2X1/4	6'-0"	104	SQ-2		A36
	3	a279	L3-1/2X3-1/2X1/4	6'-0"	104			A36
	6	a284	L3-1/2X3-1/2X1/4	2'-0"	69			A36

STEEL ASTM	A992	UNO
ELECTRODES	E70XX L.H.	UNO
WELDS	1/4" FILLET	UNO
OPEN HOLES	13/16" UNO	FINISH PER SPECS
BOLTS	3/4" A325N	UNO
PAINT	1 S/C STD PRIMER U.N.O.	UNO

PROJECT NAME
OLDE ORCHARD ELEMENTARY SCHOOL
LOCATION
800 McNAUGHTEN RD. COLUMBUS, OHIO 43213
CONTRACTOR
THOMAS AND MARKER CONSTRUCTION
ARCHITECT
BRAUN & STEIDL

DATE	NO.	DESCRIPTION	BY
5/28/11	B	For Checking	TMc
5/16/11	A	For Approval	TMc

North Central Fabrication, Ltd.
NORTH CENTRAL FABRICATION
Mansfield, OH 44906
419-529-2744 FAX 419-529-5387 http://www.northcentralfab
AISC CERTIFIED FABRICATOR

DESCRIPTION	DATE	DATE	JOB No.
ROOF FRAME	05/19/2011		70234
	DRAWN BY TMc	CHECKED BY TAN	DRG No. RF4

PHASE				
1	2	3	4	5
1	0	0	0	0

ON HOLD - FOR APPROVAL COMMENTS ONLY - DO NOT FABRICATE
WAITING FOR MECHANICAL OPENING INFORMATION
WAITING FOR JOIST DRAWINGS

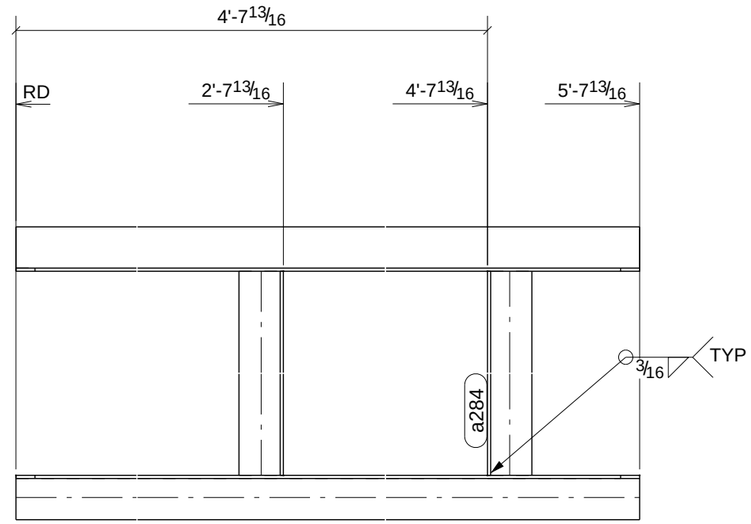

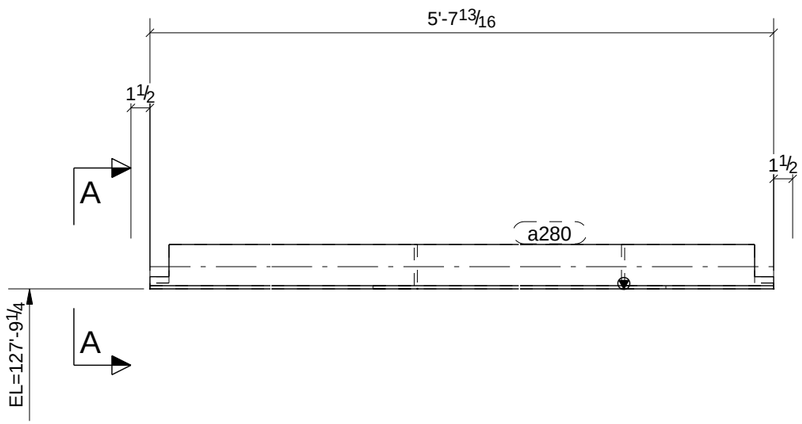

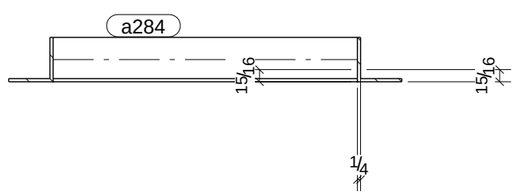

A - A

ONE - ROOF FRAME - RF5

PROCESS CONTROL
PROCESS BY
FAB: _____
FIT AND WELD: _____
INSPECTION: _____
OTHER (IF NEEDED) _____
_____ : _____
_____ : _____
_____ : _____
_____ : _____
_____ : _____
REFERENCE LATEST ERECTION DRAWINGS FOR MATERIAL & FABRICATION INFORMATION

BILL OF MATERIAL

Qty Ea.	Qty Tot	Piece Mark	Description	Length	Weight Total	Remarks	Adv Mill #	Steel Grade
	1	RF5	ROOF FRAME					
	1		L3-1/2X3-1/2X1/4	5'-7 13/16"	33	SQ-2		A36
	1	a280	L3-1/2X3-1/2X1/4	5'-7 13/16"	33			A36
	2	a284	L3-1/2X3-1/2X1/4	2'-0"	23			A36

STEEL ASTM	A992	UNO
ELECTRODES	E70XX L.H.	UNO
WELDS	1/4" FILLET	UNO
OPEN HOLES	13/16" UNO	FINISH PER SPECS
BOLTS	3/4" A325N	UNO
PAINT	1 S/C STD PRIMER U.N.O.	UNO

PROJECT NAME
OLDE ORCHARD ELEMENTARY SCHOOL
LOCATION
800 McNAUGHTEN RD. COLUMBUS, OHIO 43213
CONTRACTOR
THOMAS AND MARKER CONSTRUCTION
ARCHITECT
BRAUN & STEIDL

DATE	NO.	DESCRIPTION	BY
5/28/11	B	For Checking	TMc
5/16/11	A	For Approval	TMc

North Central Fabrication, Ltd.
NORTH CENTRAL FABRICATION
Mansfield, OH 44906
419-529-2744 FAX 419-529-5387 http://www.northcentralfab
AISC CERTIFIED FABRICATOR

DESCRIPTION	DATE	DATE	JOB No.
ROOF FRAME	05/19/2011		70234
	DRAWN BY TMc	CHECKED BY TAN	DRG No. RF5

PHASE				
1	2	3	4	5
1	0	0	0	0

ON HOLD - FOR APPROVAL COMMENTS ONLY - DO NOT FABRICATE
WAITING FOR MECHANICAL OPENING INFORMATION
WAITING FOR JOIST DRAWINGS

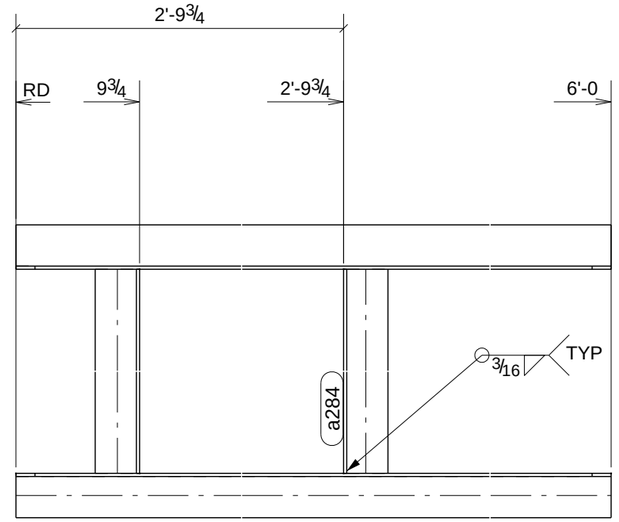

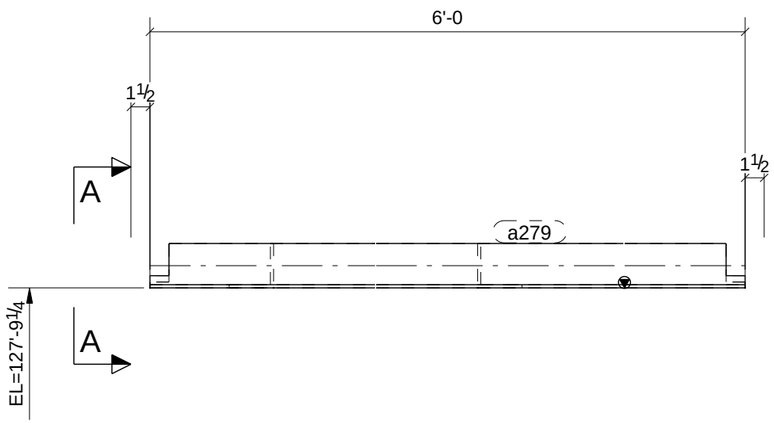

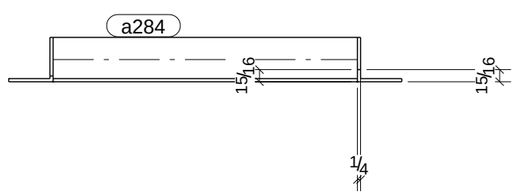

A - A

PROCESS CONTROL
PROCESS BY
FAB: _____
FIT AND WELD: _____
INSPECTION: _____
OTHER (IF NEEDED) _____
_____ : _____
_____ : _____
_____ : _____
_____ : _____
REFERENCE LATEST ERECTION DRAWINGS FOR MATERIAL & FABRICATION INFORMATION

ONE - ROOF FRAME - RF6

BILL OF MATERIAL

Qty Ea.	Qty Tot	Piece Mark	Description	Length	Weight Total	Remarks	Adv Mill #	Steel Grade
	1	RF6	ROOF FRAME					
	1		L3-1/2X3-1/2X1/4	6'-0"	35	SQ-2		A36
	1	a279	L3-1/2X3-1/2X1/4	6'-0"	35			A36
	2	a284	L3-1/2X3-1/2X1/4	2'-0"	23			A36

STEEL ASTM	A992	UNO
ELECTRODES	E70XX L.H.	UNO
WELDS	1/4" FILLET	UNO
OPEN HOLES	13/16" UNO	FINISH PER SPECS
BOLTS	3/4" A325N	UNO
PAINT	1 S/C STD PRIMER U.N.O.	UNO

PROJECT NAME
OLDE ORCHARD ELEMENTARY SCHOOL
LOCATION
800 McNAUGHTEN RD. COLUMBUS, OHIO 43213
CONTRACTOR
THOMAS AND MARKER CONSTRUCTION
ARCHITECT
BRAUN & STEIDL

DATE	NO.	DESCRIPTION	BY
5/28/11	B	For Checking	TMc
5/16/11	A	For Approval	TMc

North Central Fabrication, Ltd.
NORTH CENTRAL FABRICATION
Mansfield, OH 44906
419-529-2744 FAX 419-529-5387 http://www.northcentralfab
AISC CERTIFIED FABRICATOR

DESCRIPTION	DATE	DATE	JOB No.
ROOF FRAME	05/19/2011		70234
	DRAWN BY TMc	CHECKED BY TAN	DRG No. RF6

PHASE				
1	2	3	4	5
1	0	0	0	0

ON HOLD - FOR APPROVAL COMMENTS ONLY - DO NOT FABRICATE
WAITING FOR MECHANICAL OPENING INFORMATION
WAITING FOR JOIST DRAWINGS

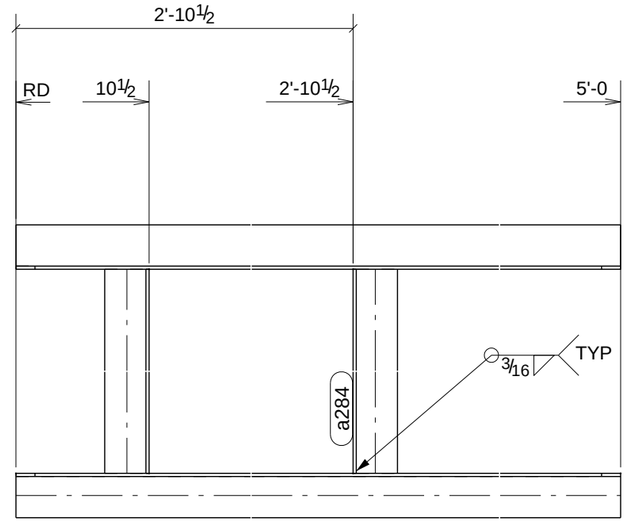

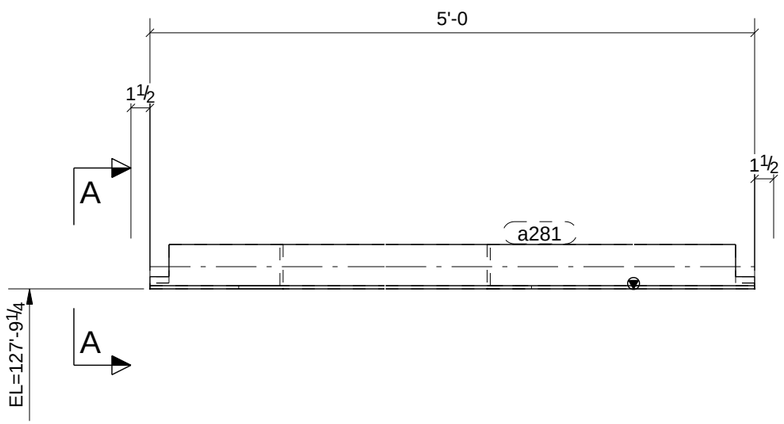

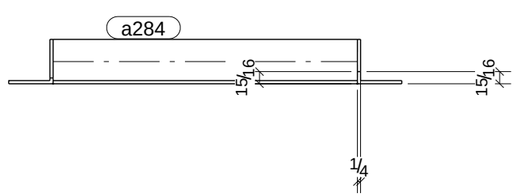

A - A

PROCESS CONTROL
PROCESS BY
FAB: _____
FIT AND WELD: _____
INSPECTION: _____
OTHER (IF NEEDED) _____
_____ : _____
_____ : _____
_____ : _____
_____ : _____
_____ : _____
REFERENCE LATEST ERECTION DRAWINGS FOR MATERIAL & FABRICATION INFORMATION

ONE - ROOF FRAME - RF7

BILL OF MATERIAL

Qty Ea.	Qty Tot	Piece Mark	Description	Length	Weight Total	Remarks	Adv Mill #	Steel Grade
	1	RF7	ROOF FRAME					
	1		L3-1/2X3-1/2X1/4	5'-0"	29	SQ-2		A36
	1	a281	L3-1/2X3-1/2X1/4	5'-0"	29			A36
	2	a284	L3-1/2X3-1/2X1/4	2'-0"	23			A36

STEEL ASTM	A992	UNO
ELECTRODES	E70XX L.H.	UNO
WELDS	1/4" FILLET	UNO
OPEN HOLES	13/16" UNO	FINISH PER SPECS
BOLTS	3/4" A325N	UNO
PAINT	1 S/C STD PRIMER U.N.O.	UNO

PROJECT NAME
OLDE ORCHARD ELEMENTARY SCHOOL
LOCATION
800 McNAUGHTEN RD. COLUMBUS, OHIO 43213
CONTRACTOR
THOMAS AND MARKER CONSTRUCTION
ARCHITECT
BRAUN & STEIDL

DATE	NO.	DESCRIPTION	BY
5/28/11	B	For Checking	TMc
5/16/11	A	For Approval	TMc

North Central Fabrication, Ltd.
NORTH CENTRAL FABRICATION
Mansfield, OH 44906
419-529-2744 FAX 419-529-5387 http://www.northcentralfab
AISC CERTIFIED FABRICATOR

DESCRIPTION	DATE	DATE	JOB No.
ROOF FRAME	05/19/2011		70234
	DRAWN BY TMc	CHECKED BY TAN	DRG No. RF7

PHASE				
1	2	3	4	5
1	0	0	0	0

ON HOLD - FOR APPROVAL COMMENTS ONLY - DO NOT FABRICATE
WAITING FOR MECHANICAL OPENING INFORMATION
WAITING FOR JOIST DRAWINGS

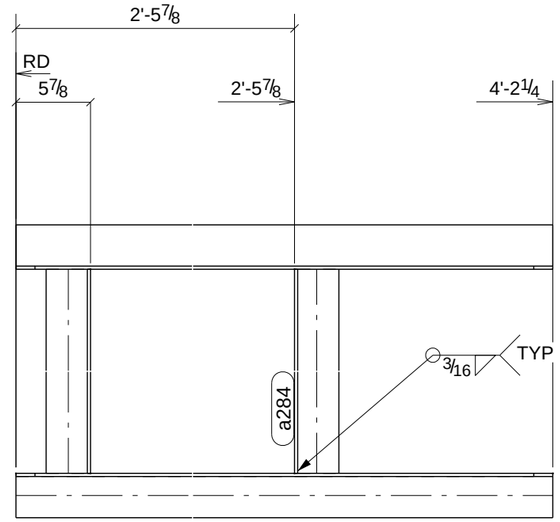

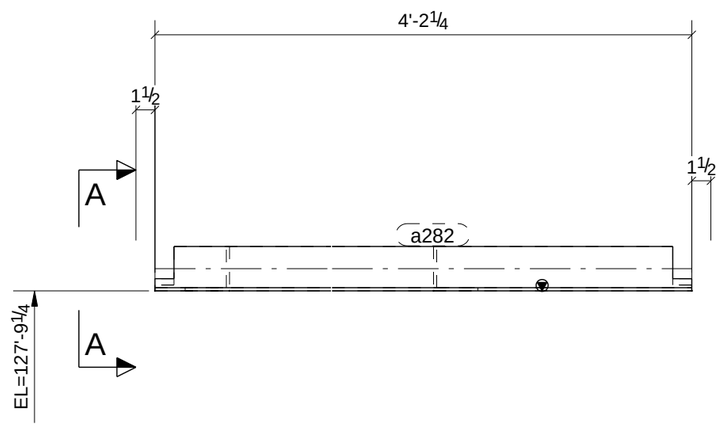

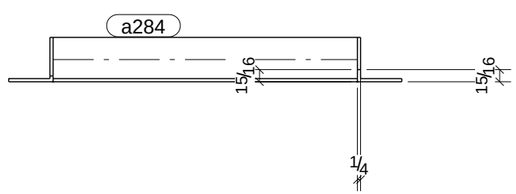

A - A

ONE - ROOF FRAME - RF8

PROCESS CONTROL
PROCESS BY
FAB: _____
FIT AND WELD: _____
INSPECTION: _____
OTHER (IF NEEDED) _____
_____ : _____
_____ : _____
_____ : _____
_____ : _____
_____ : _____
REFERENCE LATEST ERECTION DRAWINGS FOR MATERIAL & FABRICATION INFORMATION

BILL OF MATERIAL

Qty Ea.	Qty Tot	Piece Mark	Description	Length	Weight Total	Remarks	Adv Mill #	Steel Grade
	1	RF8	ROOF FRAME					
	1		L3-1/2X3-1/2X1/4	4'-2 1/4"	24	SQ-2		A36
	1	a282	L3-1/2X3-1/2X1/4	4'-2 1/4"	24			A36
	2	a284	L3-1/2X3-1/2X1/4	2'-0"	23			A36

STEEL ASTM	A992	UNO
ELECTRODES	E70XX L.H.	UNO
WELDS	1/4" FILLET	UNO
OPEN HOLES	13/16" UNO	FINISH PER SPECS
BOLTS	3/4" A325N	UNO
PAINT	1 S/C STD PRIMER U.N.O.	UNO

PROJECT NAME
OLDE ORCHARD ELEMENTARY SCHOOL
LOCATION
800 McNAUGHTEN RD. COLUMBUS, OHIO 43213
CONTRACTOR
THOMAS AND MARKER CONSTRUCTION
ARCHITECT
BRAUN & STEIDL

DATE	NO.	DESCRIPTION	BY
5/28/11	B	For Checking	TMc
5/16/11	A	For Approval	TMc

North Central Fabrication, Ltd.
NORTH CENTRAL FABRICATION
Mansfield, OH 44906
419-529-2744 FAX 419-529-5387 http://www.northcentralfab
AISC CERTIFIED FABRICATOR

DESCRIPTION	DATE	DATE	JOB No.
ROOF FRAME	05/19/2011		70234
	DRAWN BY TMc	CHECKED BY TAN	DRG No. RF8

PHASE				
1	2	3	4	5
1	0	0	0	0

ON HOLD - FOR APPROVAL COMMENTS ONLY - DO NOT FABRICATE
WAITING FOR MECHANICAL OPENING INFORMATION
WAITING FOR JOIST DRAWINGS

A - A

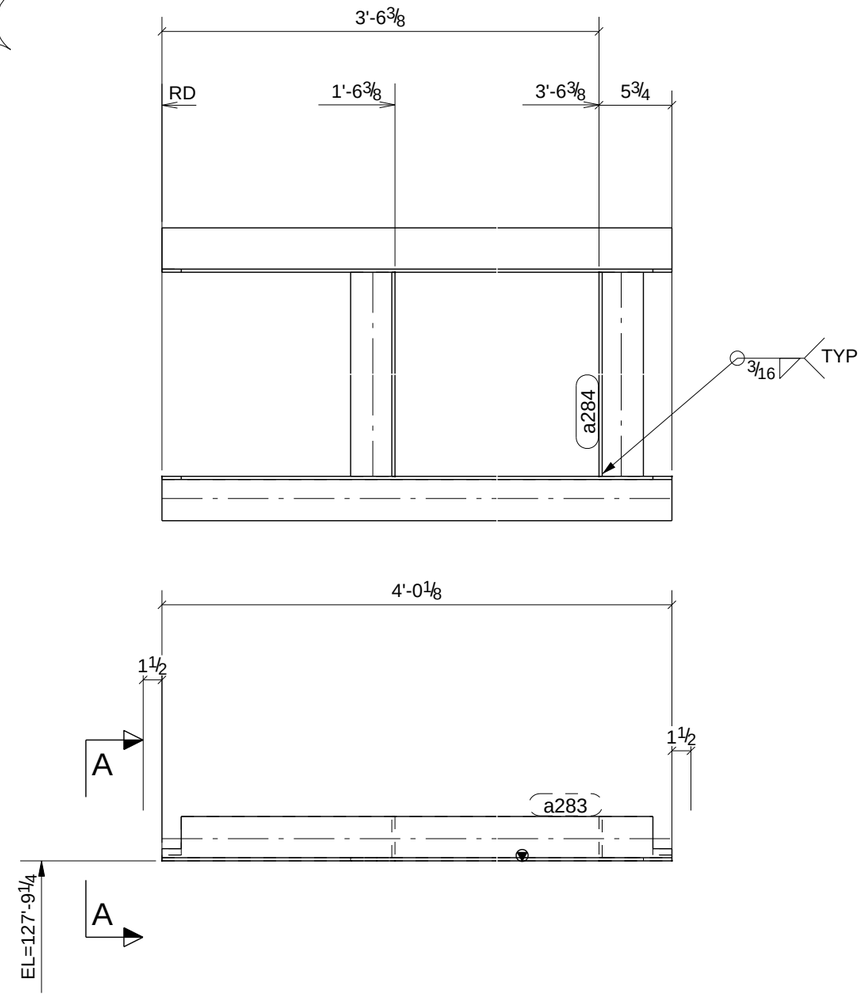

ONE - ROOF FRAME - RF9

PROCESS CONTROL
PROCESS BY
FAB: _____
FIT AND WELD: _____
INSPECTION: _____
OTHER (IF NEEDED) _____
_____ : _____
_____ : _____
_____ : _____
_____ : _____
REFERENCE LATEST ERECTION DRAWINGS FOR MATERIAL & FABRICATION INFORMATION

BILL OF MATERIAL

Qty Ea.	Qty Tot	Piece Mark	Description	Length	Weight Total	Remarks	Adv Mill #	Steel Grade
	1	RF9	ROOF FRAME					
	1		L3-1/2X3-1/2X1/4	4'-0 1/8"	23	SQ-2		A36
	1	a283	L3-1/2X3-1/2X1/4	4'-0 1/8"	23			A36
	2	a284	L3-1/2X3-1/2X1/4	2'-0"	23			A36

STEEL ASTM	A992	UNO
ELECTRODES	E70XX L.H.	UNO
WELDS	1/4" FILLET	UNO
OPEN HOLES	13/16" UNO	FINISH PER SPECS
BOLTS	3/4" A325N	UNO
PAINT	1 S/C STD PRIMER U.N.O.	UNO

PROJECT NAME
OLDE ORCHARD ELEMENTARY SCHOOL
LOCATION
800 McNAUGHTEN RD. COLUMBUS, OHIO 43213
CONTRACTOR
THOMAS AND MARKER CONSTRUCTION
ARCHITECT
BRAUN & STEIDL

DATE	NO.	DESCRIPTION	BY
5/28/11	B	For Checking	TMc
5/16/11	A	For Approval	TMc

North Central Fabrication, Ltd.
NORTH CENTRAL FABRICATION
Mansfield, OH 44906
419-529-2744 FAX 419-529-5387 http://www.northcentralfab
AISC CERTIFIED FABRICATOR

DESCRIPTION	DATE	DATE	JOB No.
ROOF FRAME	05/19/2011		70234
	DRAWN BY TMc	CHECKED BY TAN	DRG No. RF9

PHASE				
1	2	3	4	5
1	0	0	0	0

ON HOLD - FOR APPROVAL COMMENTS ONLY - DO NOT FABRICATE
WAITING FOR MECHANICAL OPENING INFORMATION
WAITING FOR JOIST DRAWINGS

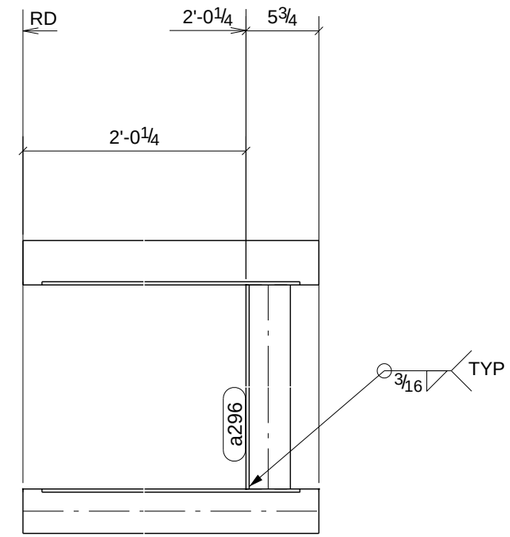

A - A

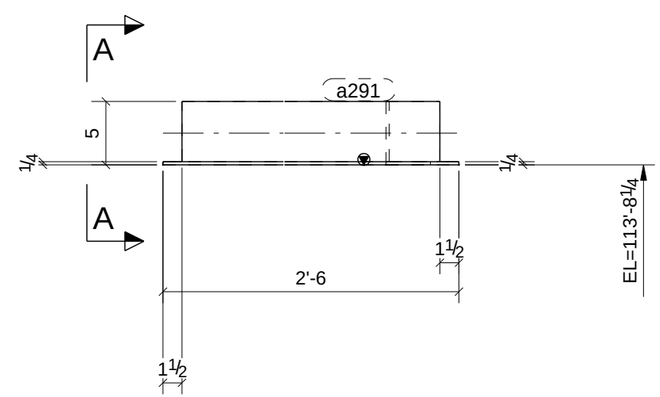

ONE - ROOF FRAME - RF10

PROCESS CONTROL
PROCESS BY
FAB: _____
FIT AND WELD: _____
INSPECTION: _____
OTHER (IF NEEDED) _____
_____ : _____
_____ : _____
_____ : _____
_____ : _____
REFERENCE LATEST ERECTION DRAWINGS FOR MATERIAL & FABRICATION INFORMATION

BILL OF MATERIAL

Qty Ea.	Qty Tot	Piece Mark	Description	Length	Weight Total	Remarks	Adv Mill #	Steel Grade
	1	RF10	ROOF FRAME					
	1		L5X3-1/2X1/4	2'-6"	18	SQ-2		A36
	1	a291	L5X3-1/2X1/4	2'-6"	18			A36
	1	a296	L5X3-1/2X1/4	2'-0"	14			A36

STEEL ASTM	A992	UNO
ELECTRODES	E70XX L.H.	UNO
WELDS	1/4" FILLET	UNO
OPEN HOLES	13/16" UNO	FINISH PER SPECS
BOLTS	3/4" A325N	UNO
PAINT	1 S/C STD PRIMER U.N.O.	UNO

PROJECT NAME
OLDE ORCHARD ELEMENTARY SCHOOL
LOCATION
800 McNAUGHTEN RD. COLUMBUS, OHIO 43213
CONTRACTOR
THOMAS AND MARKER CONSTRUCTION
ARCHITECT
BRAUN & STEIDL

DATE	NO.	DESCRIPTION	BY
5/28/11	B	For Checking	TMc
5/16/11	A	For Approval	TMc

North Central Fabrication, Ltd.
NORTH CENTRAL FABRICATION
Mansfield, OH 44906
419-529-2744 FAX 419-529-5387 http://www.northcentralfab
AISC CERTIFIED FABRICATOR

DESCRIPTION	DATE	DATE	JOB No.
ROOF FRAME	05/19/2011		70234
	DRAWN BY TMc	CHECKED BY TAN	DRG No. RF10

PHASE				
1	2	3	4	5
1	0	0	0	0

ON HOLD - FOR APPROVAL COMMENTS ONLY - DO NOT FABRICATE
WAITING FOR MECHANICAL OPENING INFORMATION
WAITING FOR JOIST DRAWINGS

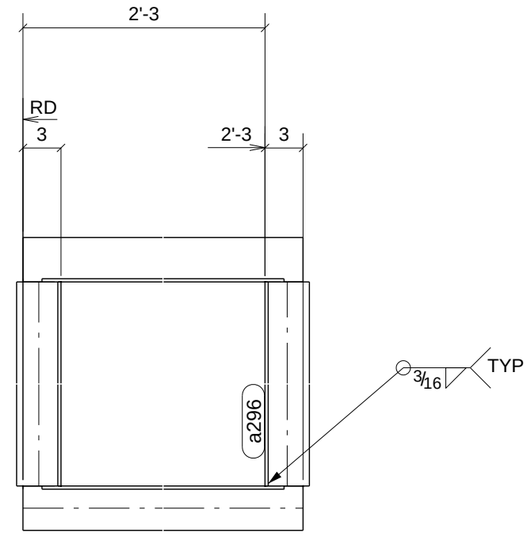

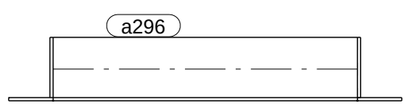

A - A

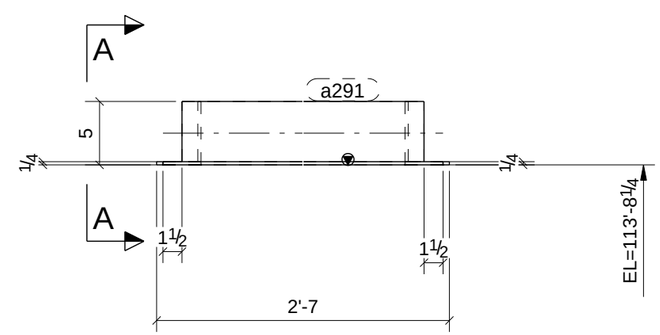

ONE - ROOF FRAME - RF11

PROCESS CONTROL
PROCESS BY
FAB: _____
FIT AND WELD: _____
INSPECTION: _____
OTHER (IF NEEDED) _____
_____ : _____
_____ : _____
_____ : _____
_____ : _____
REFERENCE LATEST ERECTION DRAWINGS FOR MATERIAL & FABRICATION INFORMATION

BILL OF MATERIAL

Qty Ea.	Qty Tot	Piece Mark	Description	Length	Weight Total	Remarks	Adv Mill #	Steel Grade
	1	RF11	ROOF FRAME					
	1		L5X3-1/2X1/4	2'-6"	18	SQ-2		A36
	1	a291	L5X3-1/2X1/4	2'-6"	18			A36
	2	a296	L5X3-1/2X1/4	2'-0"	28			A36

STEEL ASTM	A992	UNO
ELECTRODES	E70XX L.H.	UNO
WELDS	1/4" FILLET	UNO
OPEN HOLES	13/16" UNO	FINISH PER SPECS
BOLTS	3/4" A325N	UNO
PAINT	1 S/C STD PRIMER U.N.O.	UNO

PROJECT NAME
OLDE ORCHARD ELEMENTARY SCHOOL
LOCATION
800 McNAUGHTEN RD. COLUMBUS, OHIO 43213
CONTRACTOR
THOMAS AND MARKER CONSTRUCTION
ARCHITECT
BRAUN & STEIDL

DATE	NO.	DESCRIPTION	BY
5/28/11	B	For Checking	TMc
5/16/11	A	For Approval	TMc

North Central Fabrication, Ltd.
NORTH CENTRAL FABRICATION
Mansfield, OH 44906
419-529-2744 FAX 419-529-5387 http://www.northcentralfab
AISC CERTIFIED FABRICATOR

DESCRIPTION	DATE	DATE	JOB No.
ROOF FRAME	05/19/2011		70234
	DRAWN BY TMc	CHECKED BY TAN	DRG No. RF11

PHASE				
1	2	3	4	5
1	0	0	0	0

ON HOLD - FOR APPROVAL COMMENTS ONLY - DO NOT FABRICATE
WAITING FOR MECHANICAL OPENING INFORMATION
WAITING FOR JOIST DRAWINGS

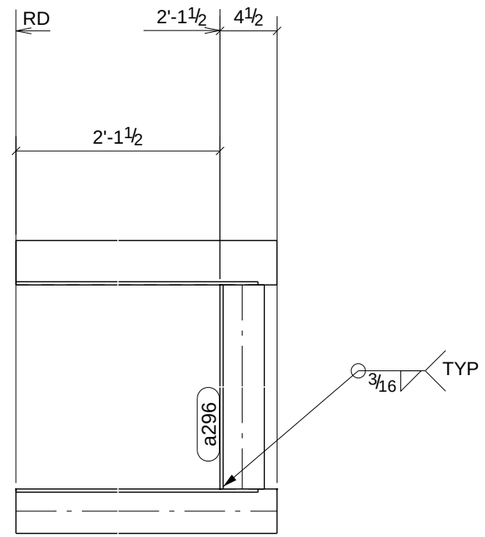

A - A

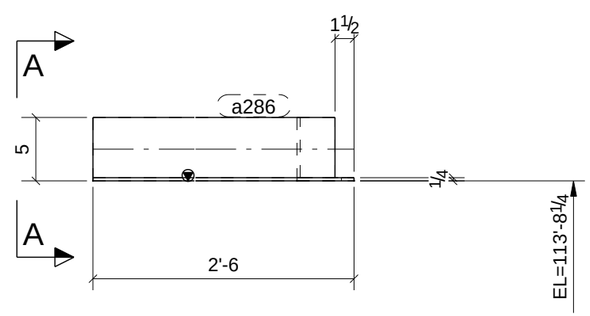

ONE - ROOF FRAME - RF12

PROCESS CONTROL
PROCESS BY
FAB: _____
FIT AND WELD: _____
INSPECTION: _____
OTHER (IF NEEDED) _____
_____ : _____
_____ : _____
_____ : _____
_____ : _____
REFERENCE LATEST ERECTION DRAWINGS FOR MATERIAL & FABRICATION INFORMATION

BILL OF MATERIAL

Qty Ea.	Qty Tot	Piece Mark	Description	Length	Weight Total	Remarks	Adv Mill #	Steel Grade
	1	RF12	ROOF FRAME					
	1		L5X3-1/2X1/4	2'-6"	18	SQ-2		A36
	1	a286	L5X3-1/2X1/4	2'-6"	18			A36
	1	a296	L5X3-1/2X1/4	2'-0"	14			A36

STEEL ASTM	A992	UNO
ELECTRODES	E70XX L.H.	UNO
WELDS	1/4" FILLET	UNO
OPEN HOLES	13/16" UNO	FINISH PER SPECS
BOLTS	3/4" A325N	UNO
PAINT	1 S/C STD PRIMER U.N.O.	UNO

PROJECT NAME
OLDE ORCHARD ELEMENTARY SCHOOL
LOCATION
800 McNAUGHTEN RD. COLUMBUS, OHIO 43213
CONTRACTOR
THOMAS AND MARKER CONSTRUCTION
ARCHITECT
BRAUN & STEIDL

DATE	NO.	DESCRIPTION	BY
5/28/11	B	For Checking	TMc
5/16/11	A	For Approval	TMc

North Central Fabrication, Ltd.
NORTH CENTRAL FABRICATION
Mansfield, OH 44906
419-529-2744 FAX 419-529-5387 http://www.northcentralfab
AISC CERTIFIED FABRICATOR

DESCRIPTION	DATE	DATE	JOB No.
ROOF FRAME	05/19/2011		70234
	DRAWN BY TMc	CHECKED BY TAN	DRG No. RF12

PHASE				
1	2	3	4	5
1	0	0	0	0

ON HOLD - FOR APPROVAL COMMENTS ONLY - DO NOT FABRICATE
WAITING FOR MECHANICAL OPENING INFORMATION
WAITING FOR JOIST DRAWINGS

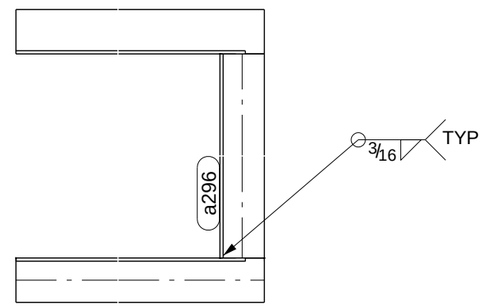

A - A

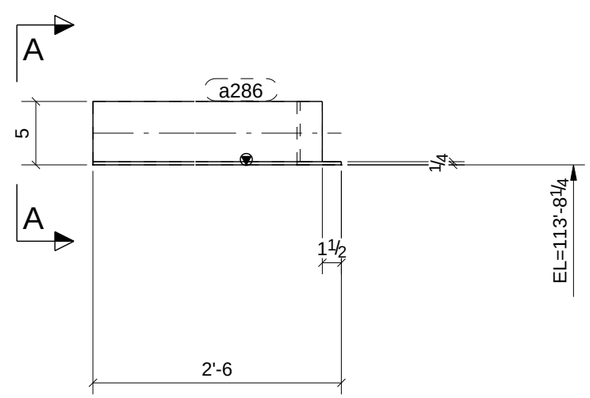

ONE - ROOF FRAME - RF13

PROCESS CONTROL
PROCESS BY
FAB: _____
FIT AND WELD: _____
INSPECTION: _____
OTHER (IF NEEDED) _____
_____ : _____
_____ : _____
_____ : _____
_____ : _____
REFERENCE LATEST ERECTION DRAWINGS FOR MATERIAL & FABRICATION INFORMATION

BILL OF MATERIAL

Qty Ea.	Qty Tot	Piece Mark	Description	Length	Weight Total	Remarks	Adv Mill #	Steel Grade
	1	RF13	ROOF FRAME					
	1		L5X3-1/2X1/4	2'-6"	18	SQ-2		A36
	1	a286	L5X3-1/2X1/4	2'-6"	18			A36
	1	a296	L5X3-1/2X1/4	2'-0"	14			A36

STEEL ASTM	A992	UNO
ELECTRODES	E70XX L.H.	UNO
WELDS	1/4" FILLET	UNO
OPEN HOLES	13/16" UNO	FINISH PER SPECS
BOLTS	3/4" A325N	UNO
PAINT	1 S/C STD PRIMER U.N.O.	UNO

PROJECT NAME
OLDE ORCHARD ELEMENTARY SCHOOL
LOCATION
800 McNAUGHTEN RD. COLUMBUS, OHIO 43213
CONTRACTOR
THOMAS AND MARKER CONSTRUCTION
ARCHITECT
BRAUN & STEIDL

DATE	NO.	DESCRIPTION	BY
5/28/11	B	For Checking	TMc
5/16/11	A	For Approval	TMc

North Central Fabrication, Ltd.
NORTH CENTRAL FABRICATION
Mansfield, OH 44906
419-529-2744 FAX 419-529-5387 http://www.northcentralfab
AISC CERTIFIED FABRICATOR

DESCRIPTION: ROOF FRAME	DATE: 05/19/2011	DATE	JOB No. 70234
	DRAWN BY: TMc	CHECKED BY: TAN	DRG No. RF13

PHASE				
1	2	3	4	5
1	0	0	0	0

ON HOLD - FOR APPROVAL COMMENTS ONLY - DO NOT FABRICATE
WAITING FOR MECHANICAL OPENING INFORMATION
WAITING FOR JOIST DRAWINGS

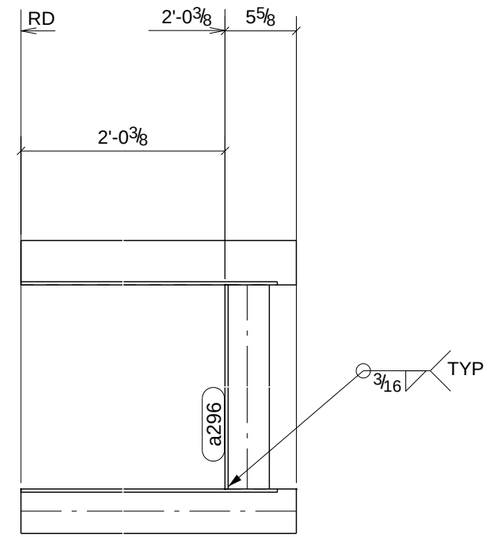

A - A

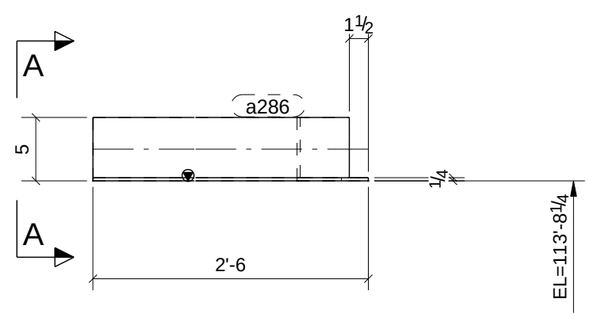

PROCESS CONTROL
PROCESS BY
FAB: _____
FIT AND WELD: _____
INSPECTION: _____
OTHER (IF NEEDED) _____
_____ : _____
_____ : _____
_____ : _____
_____ : _____
REFERENCE LATEST ERECTION DRAWINGS FOR MATERIAL & FABRICATION INFORMATION

ONE - ROOF FRAME - RF14

BILL OF MATERIAL

Qty Ea.	Qty Tot	Piece Mark	Description	Length	Weight Total	Remarks	Adv Mill #	Steel Grade
	1	RF14	ROOF FRAME					
	1		L5X3-1/2X1/4	2'-6"	18	SQ-2		A36
	1	a286	L5X3-1/2X1/4	2'-6"	18			A36
	1	a296	L5X3-1/2X1/4	2'-0"	14			A36

STEEL ASTM	A992	UNO
ELECTRODES	E70XX L.H.	UNO
WELDS	1/4" FILLET	UNO
OPEN HOLES	13/16" UNO	FINISH PER SPECS
BOLTS	3/4" A325N	UNO
PAINT	1 S/C STD PRIMER U.N.O.	UNO

PROJECT NAME
OLDE ORCHARD ELEMENTARY SCHOOL
LOCATION
800 McNAUGHTEN RD. COLUMBUS, OHIO 43213
CONTRACTOR
THOMAS AND MARKER CONSTRUCTION
ARCHITECT
BRAUN & STEIDL

DATE	NO.	DESCRIPTION	BY
5/28/11	B	For Checking	TMc
5/16/11	A	For Approval	TMc

North Central Fabrication, Ltd.
NORTH CENTRAL FABRICATION
Mansfield, OH 44906
419-529-2744 FAX 419-529-5387 http://www.northcentralfab
AISC CERTIFIED FABRICATOR

DESCRIPTION	DATE	DATE	JOB No.
ROOF FRAME	05/19/2011		70234
	DRAWN BY TMc	CHECKED BY TAN	DRG No. RF14

PHASE				
1	2	3	4	5
1	0	0	0	0

ON HOLD - FOR APPROVAL COMMENTS ONLY - DO NOT FABRICATE
WAITING FOR MECHANICAL OPENING INFORMATION
WAITING FOR JOIST DRAWINGS

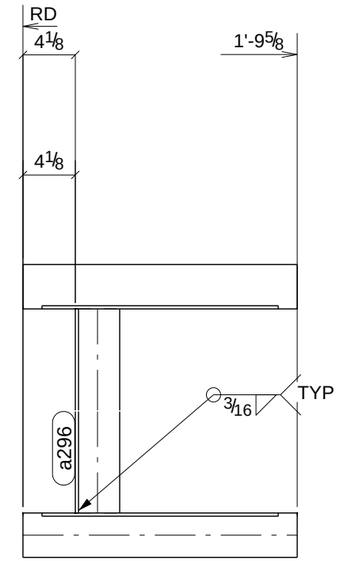

A - A

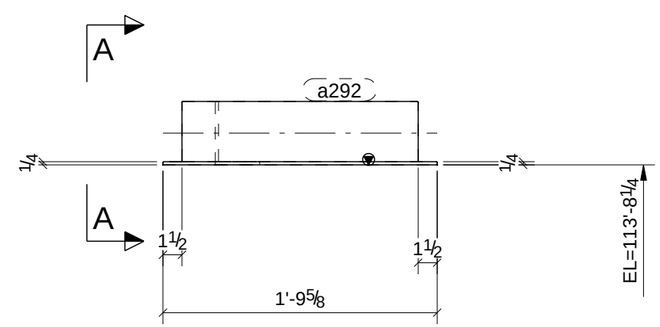

ONE - ROOF FRAME - RF15

PROCESS CONTROL
PROCESS BY
FAB: _____
FIT AND WELD: _____
INSPECTION: _____
OTHER (IF NEEDED) _____
_____ : _____
_____ : _____
_____ : _____
_____ : _____
_____ : _____
REFERENCE LATEST ERECTION DRAWINGS FOR MATERIAL & FABRICATION INFORMATION

BILL OF MATERIAL

Qty Ea.	Qty Tot	Piece Mark	Description	Length	Weight Total	Remarks	Adv Mill #	Steel Grade
	1	RF15	ROOF FRAME					
	1		L5X3-1/2X1/4	1'-9 5/8"	13	SQ-2		A36
	1	a292	L5X3-1/2X1/4	1'-9 5/8"	13			A36
	1	a296	L5X3-1/2X1/4	2'-0"	14			A36

STEEL ASTM	A992	UNO
ELECTRODES	E70XX L.H.	UNO
WELDS	1/4" FILLET	UNO
OPEN HOLES	13/16" UNO	FINISH PER SPECS
BOLTS	3/4" A325N	UNO
PAINT	1 S/C STD PRIMER U.N.O.	UNO

PROJECT NAME
OLDE ORCHARD ELEMENTARY SCHOOL
LOCATION
800 McNAUGHTEN RD. COLUMBUS, OHIO 43213
CONTRACTOR
THOMAS AND MARKER CONSTRUCTION
ARCHITECT
BRAUN & STEIDL

DATE	NO.	DESCRIPTION	BY
5/28/11	B	For Checking	TMc
5/16/11	A	For Approval	TMc

North Central Fabrication, Ltd.
NORTH CENTRAL FABRICATION
Mansfield, OH 44906
419-529-2744 FAX 419-529-5387 http://www.northcentralfab
AISC CERTIFIED FABRICATOR

DESCRIPTION	DATE	DATE	JOB No.
ROOF FRAME	05/19/2011		70234
	DRAWN BY TMc	CHECKED BY TAN	DRG No. RF15

PHASE				
1	2	3	4	5
1	0	0	0	0

ON HOLD - FOR APPROVAL COMMENTS ONLY - DO NOT FABRICATE
WAITING FOR MECHANICAL OPENING INFORMATION
WAITING FOR JOIST DRAWINGS

A - A

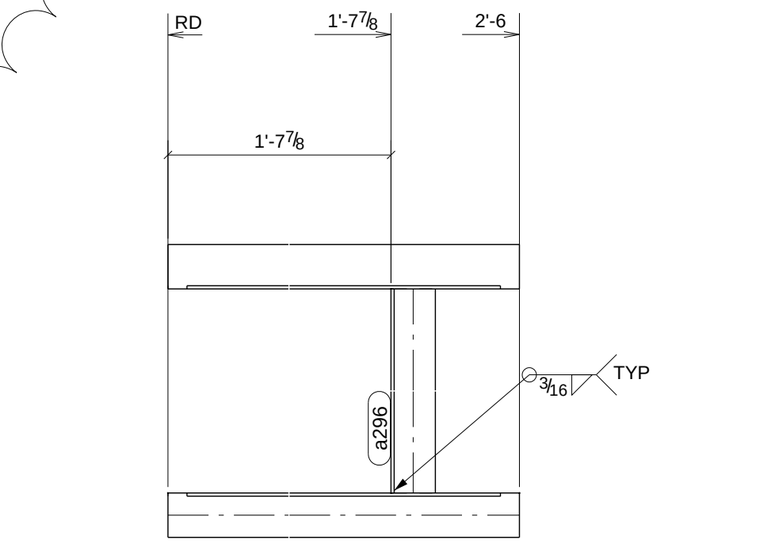

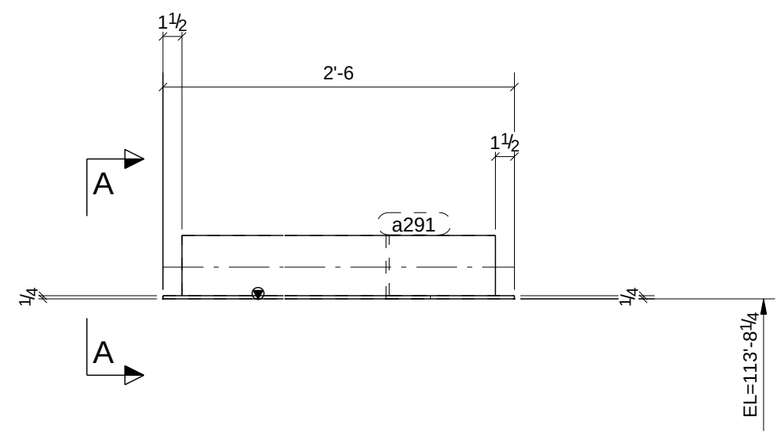

PROCESS CONTROL
PROCESS BY
FAB: _____
FIT AND WELD: _____
INSPECTION: _____
OTHER (IF NEEDED) _____
_____ : _____
_____ : _____
_____ : _____
_____ : _____
_____ : _____
REFERENCE LATEST ERECTION DRAWINGS FOR MATERIAL & FABRICATION INFORMATION

ONE - ROOF FRAME - RF16

BILL OF MATERIAL

Qty Ea.	Qty Tot	Piece Mark	Description	Length	Weight Total	Remarks	Adv Mill #	Steel Grade
	1	RF16	ROOF FRAME					
	1		L5X3-1/2X1/4	2'-6"	18	SQ-2		A36
	1	a291	L5X3-1/2X1/4	2'-6"	18			A36
	1	a296	L5X3-1/2X1/4	2'-0"	14			A36

STEEL ASTM	A992	UNO
ELECTRODES	E70XX L.H.	UNO
WELDS	1/4" FILLET	UNO
OPEN HOLES	13/16" UNO	FINISH PER SPECS
BOLTS	3/4" A325N	UNO
PAINT	1 S/C STD PRIMER U.N.O.	UNO

PROJECT NAME
OLDE ORCHARD ELEMENTARY SCHOOL
LOCATION
800 McNAUGHTEN RD. COLUMBUS, OHIO 43213
CONTRACTOR
THOMAS AND MARKER CONSTRUCTION
ARCHITECT
BRAUN & STEIDL

DATE	NO.	DESCRIPTION	BY
5/28/11	B	For Checking	TMc
5/16/11	A	For Approval	TMc

North Central Fabrication, Ltd.
NORTH CENTRAL FABRICATION
Mansfield, OH 44906
419-529-2744 FAX 419-529-5387 http://www.northcentralfab
AISC CERTIFIED FABRICATOR

DESCRIPTION	DATE	DATE	JOB No.
ROOF FRAME	05/19/2011		70234
	DRAWN BY TMc	CHECKED BY TAN	DRG No. RF16

PHASE				
1	2	3	4	5
1	0	0	0	0

ON HOLD - FOR APPROVAL COMMENTS ONLY - DO NOT FABRICATE
WAITING FOR MECHANICAL OPENING INFORMATION
WAITING FOR JOIST DRAWINGS

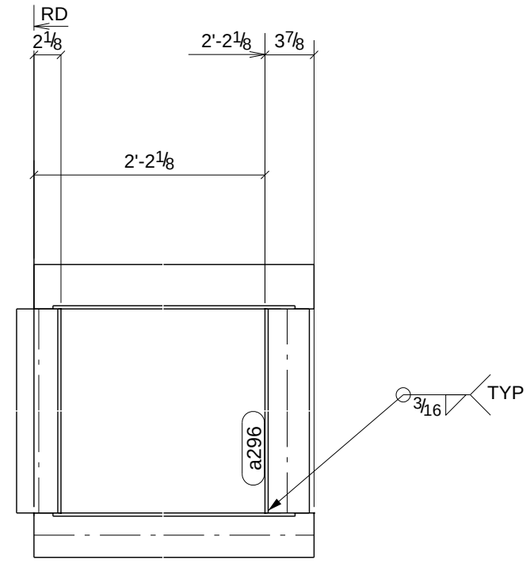

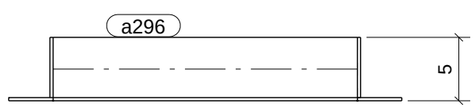

A - A

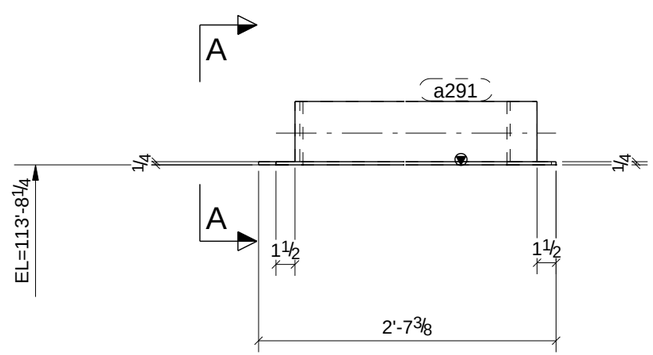

ONE - ROOF FRAME - RF17

PROCESS CONTROL
PROCESS BY
FAB: _____
FIT AND WELD: _____
INSPECTION: _____
OTHER (IF NEEDED) _____
_____ : _____
_____ : _____
_____ : _____
_____ : _____
REFERENCE LATEST ERECTION DRAWINGS FOR MATERIAL & FABRICATION INFORMATION

BILL OF MATERIAL

Qty Ea.	Qty Tot	Piece Mark	Description	Length	Weight Total	Remarks	Adv Mill #	Steel Grade
	1	RF17	ROOF FRAME					
	1		L5X3-1/2X1/4	2'-6"	18	SQ-2		A36
	1	a291	L5X3-1/2X1/4	2'-6"	18			A36
	2	a296	L5X3-1/2X1/4	2'-0"	28			A36

STEEL ASTM	A992	UNO
ELECTRODES	E70XX L.H.	UNO
WELDS	1/4" FILLET	UNO
OPEN HOLES	13/16" UNO	FINISH PER SPECS
BOLTS	3/4" A325N	UNO
PAINT	1 S/C STD PRIMER U.N.O.	UNO

PROJECT NAME
OLDE ORCHARD ELEMENTARY SCHOOL
LOCATION
800 McNAUGHTEN RD. COLUMBUS, OHIO 43213
CONTRACTOR
THOMAS AND MARKER CONSTRUCTION
ARCHITECT
BRAUN & STEIDL

DATE	NO.	DESCRIPTION	BY
5/28/11	B	For Checking	TMc
5/16/11	A	For Approval	TMc

North Central Fabrication, Ltd.
NORTH CENTRAL FABRICATION
Mansfield, OH 44906
419-529-2744 FAX 419-529-5387 http://www.northcentralfab
AISC CERTIFIED FABRICATOR

DESCRIPTION	DATE	DATE	JOB No.
ROOF FRAME	05/19/2011		70234
	DRAWN BY TMc	CHECKED BY TAN	DRG No. RF17

PHASE				
1	2	3	4	5
1	0	0	0	0

ON HOLD - FOR APPROVAL COMMENTS ONLY - DO NOT FABRICATE
WAITING FOR MECHANICAL OPENING INFORMATION
WAITING FOR JOIST DRAWINGS

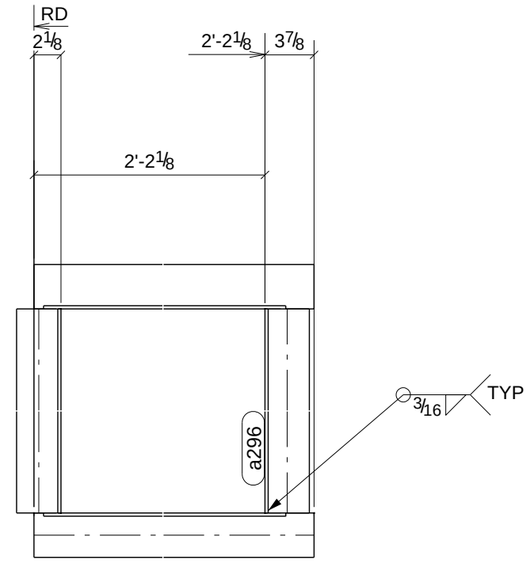

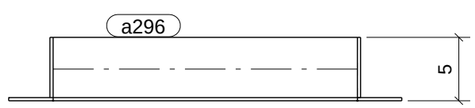

A - A

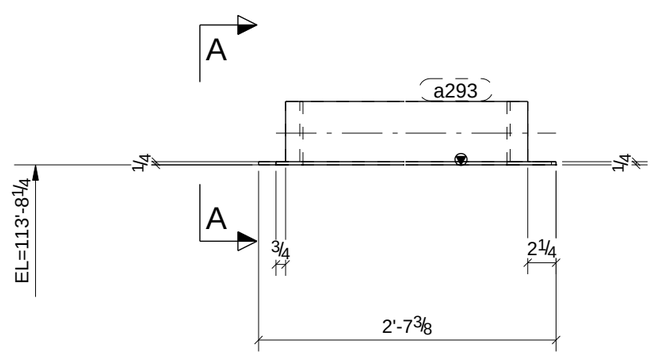

PROCESS CONTROL
PROCESS BY
FAB: _____
FIT AND WELD: _____
INSPECTION: _____
OTHER (IF NEEDED) _____
_____ : _____
_____ : _____
_____ : _____
_____ : _____
REFERENCE LATEST ERECTION DRAWINGS FOR MATERIAL & FABRICATION INFORMATION

ONE - ROOF FRAME - RF18

BILL OF MATERIAL

Qty Ea.	Qty Tot	Piece Mark	Description	Length	Weight Total	Remarks	Adv Mill #	Steel Grade
	1	RF18	ROOF FRAME					
	1		L5X3-1/2X1/4	2'-6"	18	SQ-2		A36
	1	a293	L5X3-1/2X1/4	2'-6"	18			A36
	2	a296	L5X3-1/2X1/4	2'-0"	28			A36

STEEL ASTM	A992	UNO
ELECTRODES	E70XX L.H.	UNO
WELDS	1/4" FILLET	UNO
OPEN HOLES	13/16" UNO	FINISH PER SPECS
BOLTS	3/4" A325N	UNO
PAINT	1 S/C STD PRIMER U.N.O.	UNO

PROJECT NAME
OLDE ORCHARD ELEMENTARY SCHOOL
LOCATION
800 McNAUGHTEN RD. COLUMBUS, OHIO 43213
CONTRACTOR
THOMAS AND MARKER CONSTRUCTION
ARCHITECT
BRAUN & STEIDL

DATE	NO.	DESCRIPTION	BY
5/28/11	B	For Checking	TMc
5/16/11	A	For Approval	TMc

North Central Fabrication, Ltd.
NORTH CENTRAL FABRICATION
Mansfield, OH 44906
419-529-2744 FAX 419-529-5387 http://www.northcentralfab
AISC CERTIFIED FABRICATOR

DESCRIPTION	DATE	DATE	JOB No.
ROOF FRAME	05/19/2011		70234
	DRAWN BY TMc	CHECKED BY TAN	DRG No. RF18

PHASE				
1	2	3	4	5
1	0	0	0	0

ON HOLD - FOR APPROVAL COMMENTS ONLY - DO NOT FABRICATE
WAITING FOR MECHANICAL OPENING INFORMATION
WAITING FOR JOIST DRAWINGS

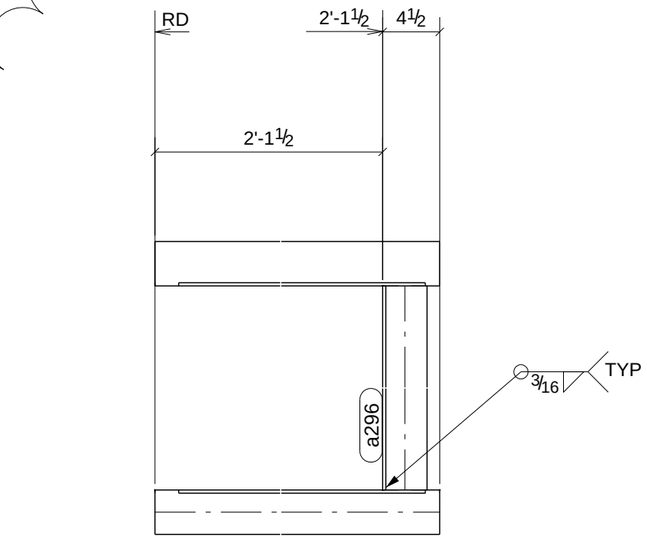

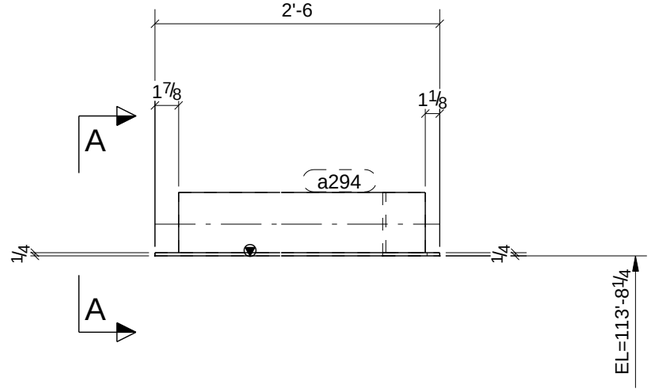

A - A

PROCESS CONTROL
PROCESS BY
FAB: _____
FIT AND WELD: _____
INSPECTION: _____
OTHER (IF NEEDED) _____
_____ : _____
_____ : _____
_____ : _____
_____ : _____
REFERENCE LATEST ERECTION DRAWINGS FOR MATERIAL & FABRICATION INFORMATION

ONE - ROOF FRAME - RF19

BILL OF MATERIAL

Qty Ea.	Qty Tot	Piece Mark	Description	Length	Weight Total	Remarks	Adv Mill #	Steel Grade
	1	RF19	ROOF FRAME					
	1		L5X3-1/2X1/4	2'-6"	18	SQ-2		A36
	1	a294	L5X3-1/2X1/4	2'-6"	18			A36
	1	a296	L5X3-1/2X1/4	2'-0"	14			A36

STEEL ASTM	A992	UNO
ELECTRODES	E70XX L.H.	UNO
WELDS	1/4" FILLET	UNO
OPEN HOLES	13/16" UNO	FINISH PER SPECS
BOLTS	3/4" A325N	UNO
PAINT	1 S/C STD PRIMER U.N.O.	UNO

PROJECT NAME
OLDE ORCHARD ELEMENTARY SCHOOL
LOCATION
800 McNAUGHTEN RD. COLUMBUS, OHIO 43213
CONTRACTOR
THOMAS AND MARKER CONSTRUCTION
ARCHITECT
BRAUN & STEIDL

DATE	NO.	DESCRIPTION	BY
5/28/11	B	For Checking	TMc
5/16/11	A	For Approval	TMc

North Central Fabrication, Ltd.
NORTH CENTRAL FABRICATION
Mansfield, OH 44906
419-529-2744 FAX 419-529-5387 http://www.northcentralfab
AISC CERTIFIED FABRICATOR

DESCRIPTION	DATE	DATE	JOB No.
ROOF FRAME	05/19/2011		70234
	DRAWN BY TMc	CHECKED BY TAN	DRG No. RF19

PHASE				
1	2	3	4	5
1	0	0	0	0

ON HOLD - FOR APPROVAL COMMENTS ONLY - DO NOT FABRICATE
WAITING FOR MECHANICAL OPENING INFORMATION
WAITING FOR JOIST DRAWINGS

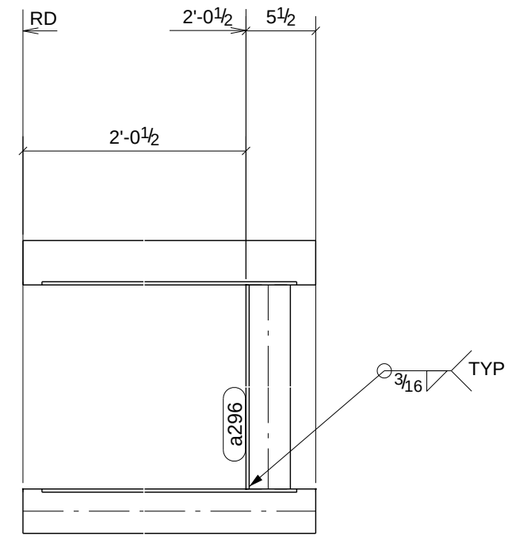

A - A

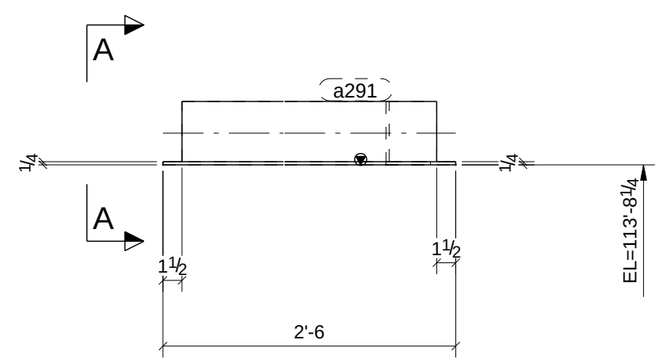

ONE - ROOF FRAME - RF20

PROCESS CONTROL
PROCESS BY
FAB: _____
FIT AND WELD: _____
INSPECTION: _____
OTHER (IF NEEDED) _____
_____ : _____
_____ : _____
_____ : _____
_____ : _____
REFERENCE LATEST ERECTION DRAWINGS FOR MATERIAL & FABRICATION INFORMATION

BILL OF MATERIAL

Qty Ea.	Qty Tot	Piece Mark	Description	Length	Weight Total	Remarks	Adv Mill #	Steel Grade
	1	RF20	ROOF FRAME					
	1		L5X3-1/2X1/4	2'-6"	18	SQ-2		A36
	1	a291	L5X3-1/2X1/4	2'-6"	18			A36
	1	a296	L5X3-1/2X1/4	2'-0"	14			A36

STEEL ASTM	A992	UNO
ELECTRODES	E70XX L.H.	UNO
WELDS	1/4" FILLET	UNO
OPEN HOLES	13/16" UNO	FINISH PER SPECS
BOLTS	3/4" A325N	UNO
PAINT	1 S/C STD PRIMER U.N.O.	UNO

PROJECT NAME
OLDE ORCHARD ELEMENTARY SCHOOL
LOCATION
800 McNAUGHTEN RD. COLUMBUS, OHIO 43213
CONTRACTOR
THOMAS AND MARKER CONSTRUCTION
ARCHITECT
BRAUN & STEIDL

DATE	NO.	DESCRIPTION	BY
5/28/11	B	For Checking	TMc
5/16/11	A	For Approval	TMc

North Central Fabrication, Ltd.
NORTH CENTRAL FABRICATION
Mansfield, OH 44906
419-529-2744 FAX 419-529-5387 http://www.northcentralfab
AISC CERTIFIED FABRICATOR

DESCRIPTION	DATE	DATE	JOB No.
ROOF FRAME	05/19/2011		70234
	DRAWN BY TMc	CHECKED BY TAN	DRG No. RF20

PHASE				
1	2	3	4	5
1	0	0	0	0

ON HOLD - FOR APPROVAL COMMENTS ONLY - DO NOT FABRICATE
WAITING FOR MECHANICAL OPENING INFORMATION
WAITING FOR JOIST DRAWINGS

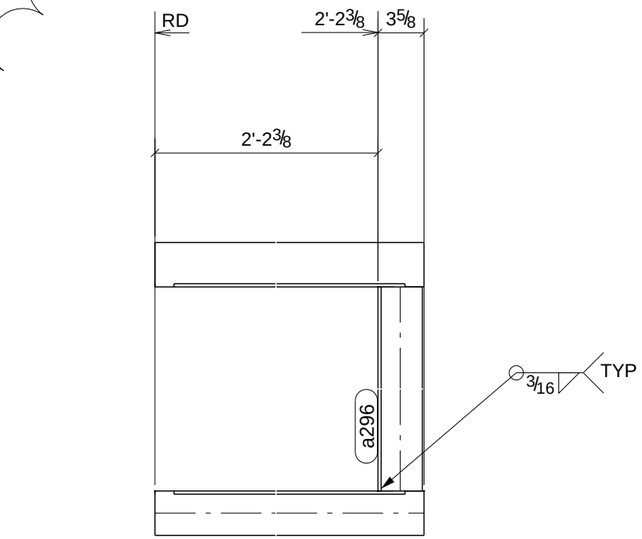

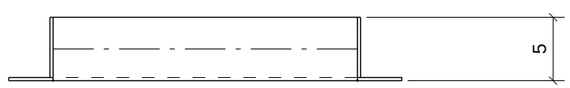

A - A

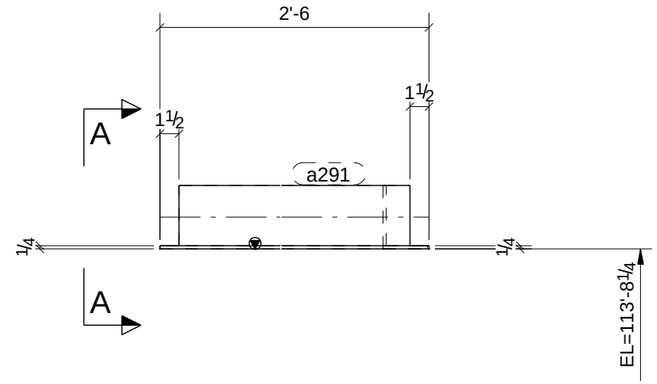

PROCESS CONTROL
PROCESS BY
FAB: _____
FIT AND WELD: _____
INSPECTION: _____
OTHER (IF NEEDED) _____
_____ : _____
_____ : _____
_____ : _____
_____ : _____
_____ : _____
REFERENCE LATEST ERECTION DRAWINGS FOR MATERIAL & FABRICATION INFORMATION

ONE - ROOF FRAME - RF21

BILL OF MATERIAL

Qty Ea.	Qty Tot	Piece Mark	Description	Length	Weight Total	Remarks	Adv Mill #	Steel Grade
	1	RF21	ROOF FRAME					
	1		L5X3-1/2X1/4	2'-6"	18	SQ-2		A36
	1	a291	L5X3-1/2X1/4	2'-6"	18			A36
	1	a296	L5X3-1/2X1/4	2'-0"	14			A36

STEEL ASTM	A992	UNO
ELECTRODES	E70XX L.H.	UNO
WELDS	1/4" FILLET	UNO
OPEN HOLES	13/16" UNO	FINISH PER SPECS
BOLTS	3/4" A325N	UNO
PAINT	1 S/C STD PRIMER U.N.O.	UNO

PROJECT NAME
OLDE ORCHARD ELEMENTARY SCHOOL
LOCATION
800 McNAUGHTEN RD. COLUMBUS, OHIO 43213
CONTRACTOR
THOMAS AND MARKER CONSTRUCTION
ARCHITECT
BRAUN & STEIDL

DATE	NO.	DESCRIPTION	BY
5/28/11	B	For Checking	TMc
5/16/11	A	For Approval	TMc

North Central Fabrication, Ltd.
NORTH CENTRAL FABRICATION
Mansfield, OH 44906
419-529-2744 FAX 419-529-5387 http://www.northcentralfab
AISC CERTIFIED FABRICATOR

DESCRIPTION	DATE	DATE	JOB No.
ROOF FRAME	05/19/2011		70234
	DRAWN BY TMc	CHECKED BY TAN	DRG No. RF21

PHASE				
1	2	3	4	5
1	0	0	0	0

ON HOLD - FOR APPROVAL COMMENTS ONLY - DO NOT FABRICATE
WAITING FOR MECHANICAL OPENING INFORMATION
WAITING FOR JOIST DRAWINGS

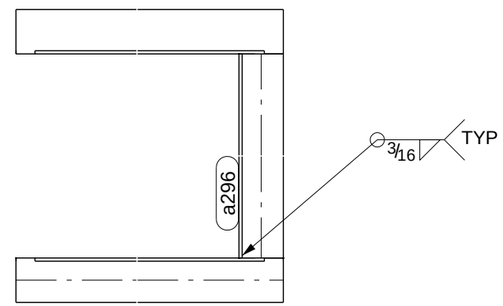

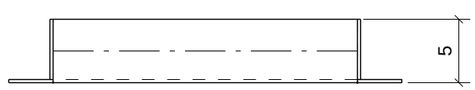

A - A

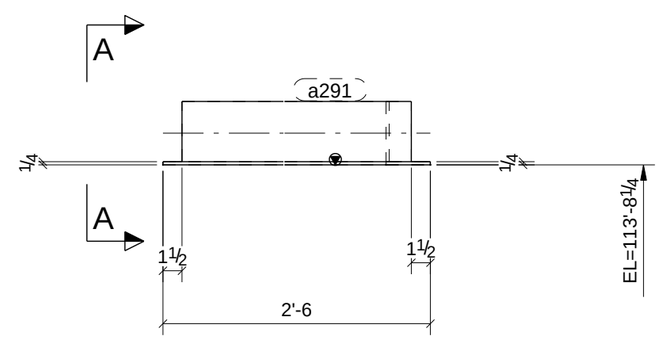

ONE - ROOF FRAME - RF22

PROCESS CONTROL
PROCESS BY
FAB: _____
FIT AND WELD: _____
INSPECTION: _____
OTHER (IF NEEDED) _____
_____ : _____
_____ : _____
_____ : _____
_____ : _____
_____ : _____
REFERENCE LATEST ERECTION DRAWINGS FOR MATERIAL & FABRICATION INFORMATION

BILL OF MATERIAL

Qty Ea.	Qty Tot	Piece Mark	Description	Length	Weight Total	Remarks	Adv Mill #	Steel Grade
	1	RF22	ROOF FRAME					
	1		L5X3-1/2X1/4	2'-6"	18	SQ-2		A36
	1	a291	L5X3-1/2X1/4	2'-6"	18			A36
	1	a296	L5X3-1/2X1/4	2'-0"	14			A36

STEEL ASTM	A992		UNO
ELECTRODES	E70XX L.H.		UNO
WELDS	1/4" FILLET		UNO
OPEN HOLES	13/16"	UNO	FINISH PER SPECS
BOLTS	3/4" A325N		UNO
PAINT	1 S/C STD PRIMER U.N.O.		UNO

PROJECT NAME
OLDE ORCHARD ELEMENTARY SCHOOL

LOCATION
800 McNAUGHTEN RD. COLUMBUS, OHIO 43213

CONTRACTOR
THOMAS AND MARKER CONSTRUCTION

ARCHITECT
BRAUN & STEIDL

DATE	NO.	DESCRIPTION	BY
5/28/11	B	For Checking	TMc
5/16/11	A	For Approval	TMc

North Central Fabrication, Ltd.
NORTH CENTRAL FABRICATION
Mansfield, OH 44906
419-529-2744 FAX 419-529-5387 http://www.northcentralfab
AISC CERTIFIED FABRICATOR

DESCRIPTION	DATE	DATE	JOB No.
ROOF FRAME	05/19/2011		70234
	DRAWN BY TMc	CHECKED BY TAN	DRG No. RF22

PHASE				
1	2	3	4	5
1	0	0	0	0

ON HOLD - FOR APPROVAL COMMENTS ONLY - DO NOT FABRICATE
WAITING FOR MECHANICAL OPENING INFORMATION
WAITING FOR JOIST DRAWINGS

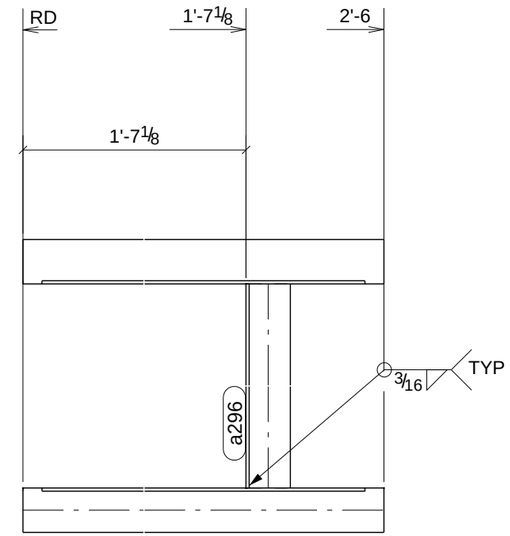

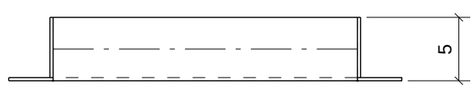

A - A

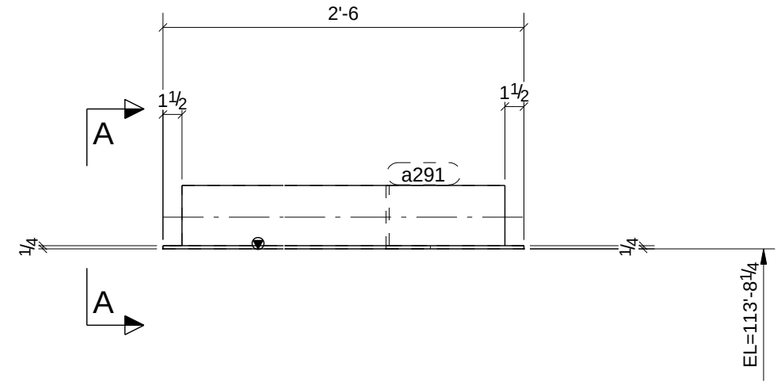

PROCESS CONTROL
PROCESS BY
FAB: _____
FIT AND WELD: _____
INSPECTION: _____
OTHER (IF NEEDED) _____
_____ : _____
_____ : _____
_____ : _____
_____ : _____
_____ : _____
REFERENCE LATEST ERECTION DRAWINGS FOR MATERIAL & FABRICATION INFORMATION

ONE - ROOF FRAME - RF23

BILL OF MATERIAL

Qty Ea.	Qty Tot	Piece Mark	Description	Length	Weight Total	Remarks	Adv Mill #	Steel Grade
	1	RF23	ROOF FRAME					
	1		L5X3-1/2X1/4	2'-6"	18	SQ-2		A36
	1	a291	L5X3-1/2X1/4	2'-6"	18			A36
	1	a296	L5X3-1/2X1/4	2'-0"	14			A36

STEEL ASTM	A992	UNO
ELECTRODES	E70XX L.H.	UNO
WELDS	1/4" FILLET	UNO
OPEN HOLES	13/16" UNO	FINISH PER SPECS
BOLTS	3/4" A325N	UNO
PAINT	1 S/C STD PRIMER U.N.O.	UNO

PROJECT NAME
OLDE ORCHARD ELEMENTARY SCHOOL
LOCATION
800 McNAUGHTEN RD. COLUMBUS, OHIO 43213
CONTRACTOR
THOMAS AND MARKER CONSTRUCTION
ARCHITECT
BRAUN & STEIDL

DATE	NO.	DESCRIPTION	BY
5/28/11	B	For Checking	TMc
5/16/11	A	For Approval	TMc

North Central Fabrication, Ltd.
NORTH CENTRAL FABRICATION
Mansfield, OH 44906
419-529-2744 FAX 419-529-5387 http://www.northcentralfab
AISC CERTIFIED FABRICATOR

DESCRIPTION	DATE	DATE	JOB No.
ROOF FRAME	05/19/2011		70234
	DRAWN BY TMc	CHECKED BY TAN	DRG No. RF23

PHASE				
1	2	3	4	5
1	0	0	0	0

ON HOLD - FOR APPROVAL COMMENTS ONLY - DO NOT FABRICATE
WAITING FOR MECHANICAL OPENING INFORMATION
WAITING FOR JOIST DRAWINGS

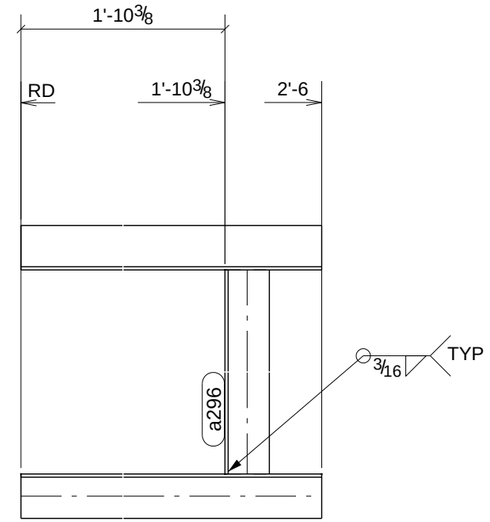

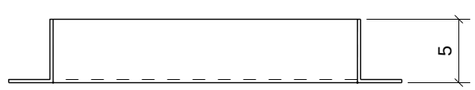

A - A

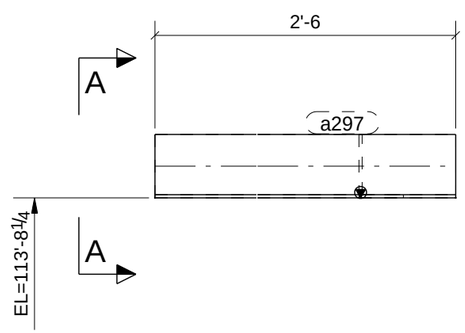

PROCESS CONTROL
PROCESS BY
FAB: _____
FIT AND WELD: _____
INSPECTION: _____
OTHER (IF NEEDED) _____
_____ : _____
_____ : _____
_____ : _____
_____ : _____
REFERENCE LATEST ERECTION DRAWINGS FOR MATERIAL & FABRICATION INFORMATION

ONE - ROOF FRAME - RF24

BILL OF MATERIAL

Qty Ea.	Qty Tot	Piece Mark	Description	Length	Weight Total	Remarks	Adv Mill #	Steel Grade
	1	RF24	ROOF FRAME					
	1		L5X3-1/2X1/4	2'-6"	18	SQ-2		A36
	1	a296	L5X3-1/2X1/4	2'-0"	14			A36
	1	a297	L5X3-1/2X1/4	2'-6"	18			A36

STEEL ASTM	A992	UNO
ELECTRODES	E70XX L.H.	UNO
WELDS	1/4" FILLET	UNO
OPEN HOLES	13/16" UNO	FINISH PER SPECS
BOLTS	3/4" A325N	UNO
PAINT	1 S/C STD PRIMER U.N.O.	UNO

PROJECT NAME
OLDE ORCHARD ELEMENTARY SCHOOL
LOCATION
800 McNAUGHTEN RD. COLUMBUS, OHIO 43213
CONTRACTOR
THOMAS AND MARKER CONSTRUCTION
ARCHITECT
BRAUN & STEIDL

DATE	NO.	DESCRIPTION	BY
5/28/11	B	For Checking	TMc
5/16/11	A	For Approval	TMc

North Central Fabrication, Ltd.
NORTH CENTRAL FABRICATION
Mansfield, OH 44906
419-529-2744 FAX 419-529-5387 http://www.northcentralfab
AISC CERTIFIED FABRICATOR

DESCRIPTION	DATE	DATE	JOB No.
ROOF FRAME	05/19/2011		70234
	DRAWN BY TMc	CHECKED BY TAN	DRG No. RF24

MATERIAL NOTE:
W-SHAPES, CHANNELS: ASTM A992
ANGLES, S-SHAPES: ASTM A36
PLATE AND BAR: ASTM A36
PIPE: ASTM A53, GRADE B
HSS: ASTM A500, GRADE B

PROCESS CONTROL
PROCESS BY
FAB: _____
FIT AND WELD: _____
INSPECTION: _____
OTHER (IF NEEDED) _____
_____ : _____
_____ : _____
_____ : _____
_____ : _____
REFERENCE LATEST ERECTION DRAWINGS FOR MATERIAL & FABRICATION INFORMATION

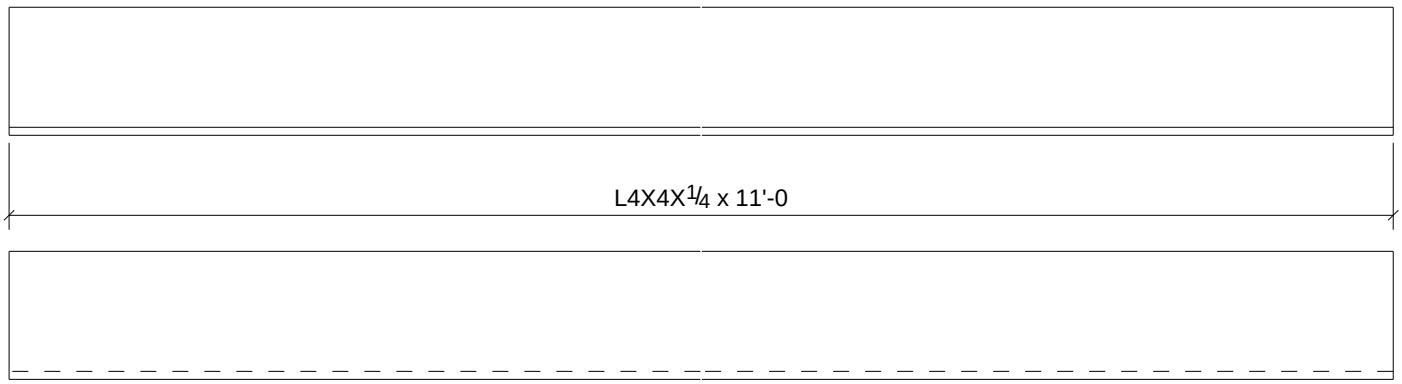

Qty.	In Assembly
1	A3

Qty.	Mark	Size	Length	Comments	Grade
1	A3	L4X4X1/4	11'-0"		A36

PROJECT NAME
OLDE ORCHARD ELEMENTARY SCHOOL

LOCATION
800 McNAUGHTEN RD. COLUMBUS, OHIO 43213

CUSTOMER
THOMAS AND MARKER CONSTRUCTION

ARCHITECT
BRAUN & STEIDL

NORTH CENTRAL FABRICATION
Mansfield, OH 44906
419-529-2744 FAX 419-529-5387 http://www.northcentralfabri

AISC CERTIFIED FABRICATOR

DESCRIPTION
ANGLE

DATE	DATE	JOB No.
05/27/2011		70234
DRAWN BY	DRAWN BY	DRG No.
TMc	TAN	A3

MATERIAL NOTE:
W-SHAPES, CHANNELS: ASTM A992
ANGLES, S-SHAPES: ASTM A36
PLATE AND BAR: ASTM A36
PIPE: ASTM A53, GRADE B
HSS: ASTM A500, GRADE B

PROCESS CONTROL
PROCESS BY
FAB: _____
FIT AND WELD: _____
INSPECTION: _____
OTHER (IF NEEDED) _____
_____ : _____
_____ : _____
_____ : _____
_____ : _____
REFERENCE LATEST ERECTION DRAWINGS FOR MATERIAL & FABRICATION INFORMATION

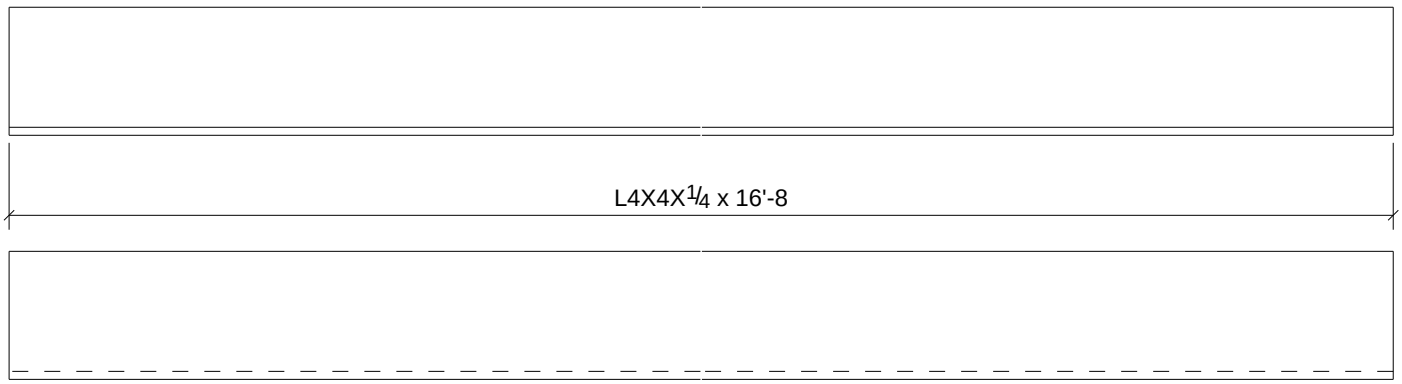

Qty.	In Assembly
1	A14

Qty.	Mark	Size	Length	Comments	Grade
1	A14	L4X4X1/4	16'-8"		A36

PROJECT NAME
OLDE ORCHARD ELEMENTARY SCHOOL

LOCATION
800 McNAUGHTEN RD. COLUMBUS, OHIO 43213

CUSTOMER
THOMAS AND MARKER CONSTRUCTION

ARCHITECT
BRAUN & STEIDL

NORTH CENTRAL FABRICATION
Mansfield, OH 44906
419-529-2744 FAX 419-529-5387 http://www.northcentralfabri

AISC CERTIFIED FABRICATOR

DESCRIPTION	DATE	DATE	JOB No.
ANGLE	05/27/2011		70234
	DRAWN BY TMc	DRAWN BY TAN	DRG No. A14

MATERIAL NOTE:
W-SHAPES, CHANNELS: ASTM A992
ANGLES, S-SHAPES: ASTM A36
PLATE AND BAR: ASTM A36
PIPE: ASTM A53, GRADE B
HSS: ASTM A500, GRADE B

PROCESS CONTROL
PROCESS BY
FAB: _____
FIT AND WELD: _____
INSPECTION: _____
OTHER (IF NEEDED) _____
_____ : _____
_____ : _____
_____ : _____
_____ : _____
REFERENCE LATEST ERECTION DRAWINGS FOR MATERIAL & FABRICATION INFORMATION

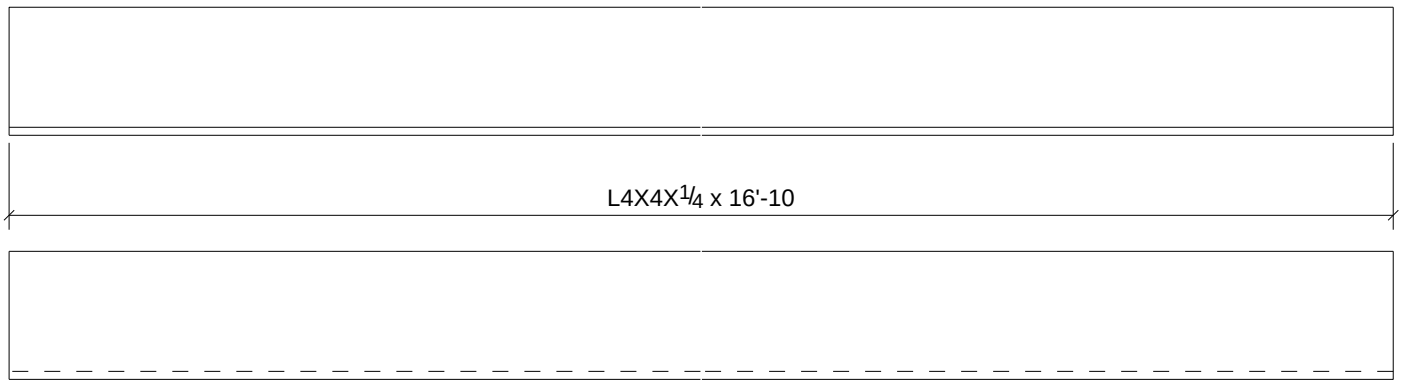

Qty.	In Assembly
1	A88

Qty.	Mark	Size	Length	Comments	Grade
1	A88	L4X4X1/4	16'-10"		A36

PROJECT NAME
OLDE ORCHARD ELEMENTARY SCHOOL

LOCATION
800 McNAUGHTEN RD. COLUMBUS, OHIO 43213

CUSTOMER
THOMAS AND MARKER CONSTRUCTION

ARCHITECT
BRAUN & STEIDL

NORTH CENTRAL FABRICATION
Mansfield, OH 44906
419-529-2744 FAX 419-529-5387 http://www.northcentralfabri

AISC CERTIFIED FABRICATOR

DESCRIPTION	DATE	DATE	JOB No.
ANGLE	05/27/2011		70234
	DRAWN BY TMc	DRAWN BY TAN	DRG No. A88

MATERIAL NOTE:
W-SHAPES, CHANNELS: ASTM A992
ANGLES, S-SHAPES: ASTM A36
PLATE AND BAR: ASTM A36
PIPE: ASTM A53, GRADE B
HSS: ASTM A500, GRADE B

PROCESS CONTROL
PROCESS BY
FAB: _____
FIT AND WELD: _____
INSPECTION: _____
OTHER (IF NEEDED) _____
_____ : _____
_____ : _____
_____ : _____
_____ : _____
REFERENCE LATEST ERECTION DRAWINGS FOR MATERIAL & FABRICATION INFORMATION

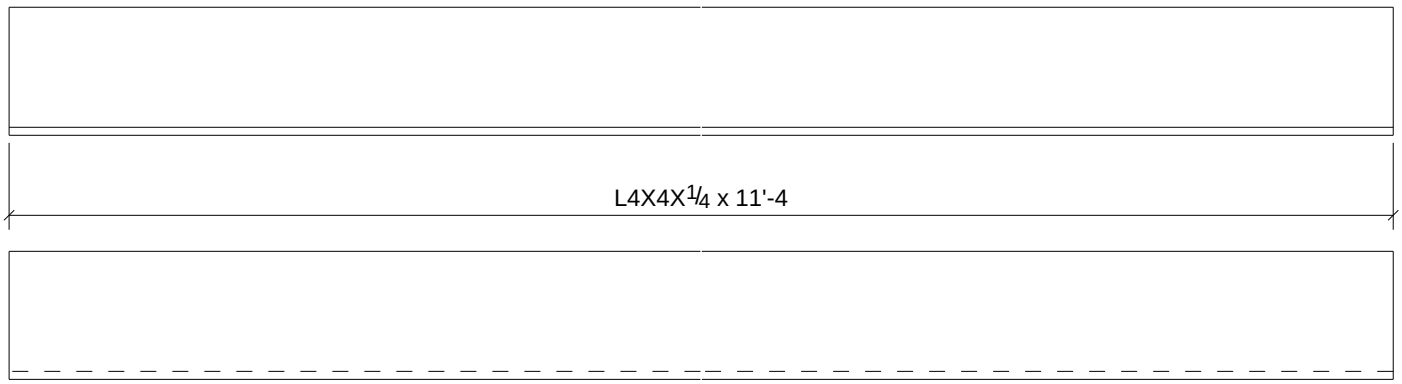

Qty.	In Assembly
1	A89

Qty.	Mark	Size	Length	Comments	Grade
1	A89	L4X4X1/4	11'-4"		A36

PROJECT NAME
OLDE ORCHARD ELEMENTARY SCHOOL

LOCATION
800 McNAUGHTEN RD. COLUMBUS, OHIO 43213

CUSTOMER
THOMAS AND MARKER CONSTRUCTION

ARCHITECT
BRAUN & STEIDL

NORTH CENTRAL FABRICATION
Mansfield, OH 44906
419-529-2744 FAX 419-529-5387 http://www.northcentralfabri

AISC CERTIFIED FABRICATOR

DESCRIPTION	DATE	DATE	JOB No.
ANGLE	05/27/2011		70234
	DRAWN BY TMc	DRAWN BY TAN	DRG No. A89

MATERIAL NOTE:
W-SHAPES, CHANNELS: ASTM A992
ANGLES, S-SHAPES: ASTM A36
PLATE AND BAR: ASTM A36
PIPE: ASTM A53, GRADE B
HSS: ASTM A500, GRADE B

PROCESS CONTROL
PROCESS BY
FAB: _____
FIT AND WELD: _____
INSPECTION: _____
OTHER (IF NEEDED) _____
_____ : _____
_____ : _____
_____ : _____
_____ : _____
REFERENCE LATEST ERECTION DRAWINGS FOR MATERIAL & FABRICATION INFORMATION

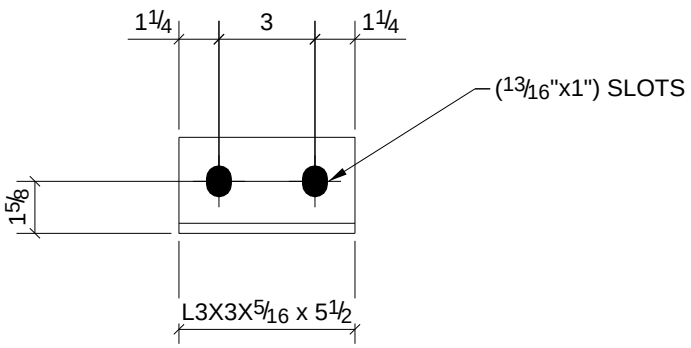

2	B134
2	B136
Qty.	In Assembly

Qty.	Mark	Size	Length	Comments	Grade
4	a10	L3X3X5/16	0'-5 1/2"		A36

PROJECT NAME
OLDE ORCHARD ELEMENTARY SCHOOL

LOCATION
800 McNAUGHTEN RD. COLUMBUS, OHIO 43213

CUSTOMER
THOMAS AND MARKER CONSTRUCTION

ARCHITECT
BRAUN & STEIDL

NORTH CENTRAL FABRICATION
Mansfield, OH 44906
419-529-2744 FAX 419-529-5387 http://www.northcentralfabri

AISC CERTIFIED FABRICATOR

DESCRIPTION	DATE	DATE	JOB No.
ANGLE	05/27/2011		70234
	DRAWN BY TMc	DRAWN BY TAN	DRG No. a10

MATERIAL NOTE:
W-SHAPES, CHANNELS: ASTM A992
ANGLES, S-SHAPES: ASTM A36
PLATE AND BAR: ASTM A36
PIPE: ASTM A53, GRADE B
HSS: ASTM A500, GRADE B

PROCESS CONTROL
PROCESS BY
FAB: _____
FIT AND WELD: _____
INSPECTION: _____
OTHER (IF NEEDED) _____
_____ : _____
_____ : _____
_____ : _____
_____ : _____
REFERENCE LATEST ERECTION DRAWINGS FOR MATERIAL & FABRICATION INFORMATION

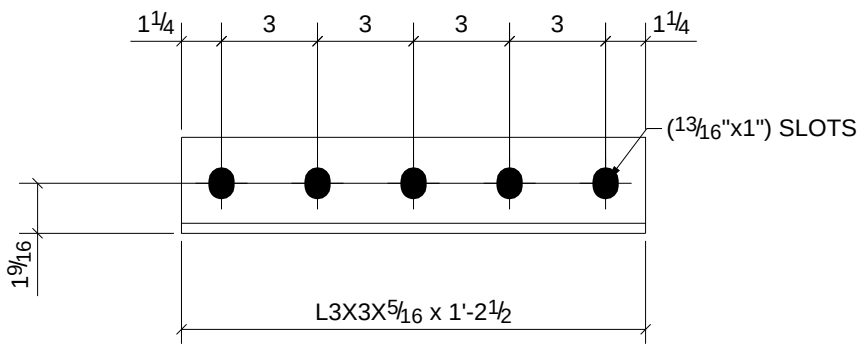

4	B13
Qty.	In Assembly

Qty.	Mark	Size	Length	Comments	Grade
4	a11	L3X3X5/16	1'-2 1/2"		A36

PROJECT NAME
OLDE ORCHARD ELEMENTARY SCHOOL

LOCATION
800 McNAUGHTEN RD. COLUMBUS, OHIO 43213

CUSTOMER
THOMAS AND MARKER CONSTRUCTION

ARCHITECT
BRAUN & STEIDL

NORTH CENTRAL FABRICATION
Mansfield, OH 44906
419-529-2744 FAX 419-529-5387 http://www.northcentralfabri

AISC CERTIFIED FABRICATOR

DESCRIPTION	DATE	DATE	JOB No.
ANGLE	05/24/2011		70234
	DRAWN BY TMc	DRAWN BY TAN	DRG No. a11

MATERIAL NOTE:
W-SHAPES, CHANNELS: ASTM A992
ANGLES, S-SHAPES: ASTM A36
PLATE AND BAR: ASTM A36
PIPE: ASTM A53, GRADE B
HSS: ASTM A500, GRADE B

PROCESS CONTROL
PROCESS BY
FAB: _____
FIT AND WELD: _____
INSPECTION: _____
OTHER (IF NEEDED) _____
_____ : _____
_____ : _____
_____ : _____
_____ : _____
REFERENCE LATEST ERECTION DRAWINGS FOR MATERIAL & FABRICATION INFORMATION

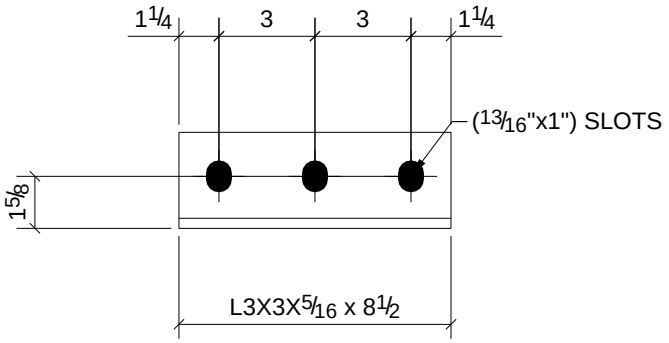

2	B29
2	B97
Qty.	In Assembly

Qty.	Mark	Size	Length	Comments	Grade
4	a12	L3X3X5/16	0'-8 1/2"		A36

PROJECT NAME
OLDE ORCHARD ELEMENTARY SCHOOL
LOCATION
800 McNAUGHTEN RD. COLUMBUS, OHIO 43213
CUSTOMER
THOMAS AND MARKER CONSTRUCTION
ARCHITECT
BRAUN & STEIDL

NORTH CENTRAL FABRICATION
Mansfield, OH 44906
419-529-2744 FAX 419-529-5387 http://www.northcentralfabri

AISC CERTIFIED FABRICATOR

DESCRIPTION	DATE	DATE	JOB No.
ANGLE	05/24/2011		70234
	DRAWN BY TMc	DRAWN BY TAN	DRG No. a12

MATERIAL NOTE:
W-SHAPES, CHANNELS: ASTM A992
ANGLES, S-SHAPES: ASTM A36
PLATE AND BAR: ASTM A36
PIPE: ASTM A53, GRADE B
HSS: ASTM A500, GRADE B

PROCESS CONTROL
PROCESS BY
FAB: _____
FIT AND WELD: _____
INSPECTION: _____
OTHER (IF NEEDED) _____
_____ : _____
_____ : _____
_____ : _____
_____ : _____
REFERENCE LATEST ERECTION DRAWINGS FOR MATERIAL & FABRICATION INFORMATION

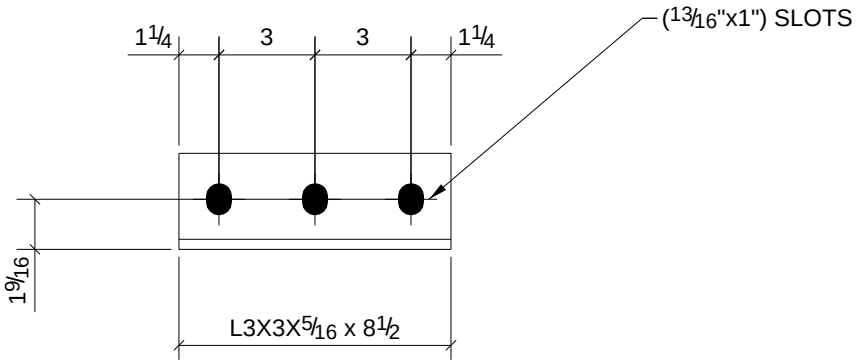

2	B38
2	B41
4	B56
4	B59
8	B67
2	B99
Qty.	In Assembly

Qty.	Mark	Size	Length	Comments	Grade
22	a13	L3X3X5/16	0'-8 1/2"		A36

PROJECT NAME
OLDE ORCHARD ELEMENTARY SCHOOL
LOCATION
800 McNAUGHTEN RD. COLUMBUS, OHIO 43213
CUSTOMER
THOMAS AND MARKER CONSTRUCTION
ARCHITECT
BRAUN & STEIDL

NORTH CENTRAL FABRICATION
Mansfield, OH 44906
419-529-2744 FAX 419-529-5387 http://www.northcentralfabri

AISC CERTIFIED FABRICATOR

DESCRIPTION	DATE	DATE	JOB No.
ANGLE	05/27/2011		70234
	DRAWN BY TMc	DRAWN BY TAN	DRG No. a13

MATERIAL NOTE:
W-SHAPES, CHANNELS: ASTM A992
ANGLES, S-SHAPES: ASTM A36
PLATE AND BAR: ASTM A36
PIPE: ASTM A53, GRADE B
HSS: ASTM A500, GRADE B

PROCESS CONTROL
PROCESS BY
FAB: _____
FIT AND WELD: _____
INSPECTION: _____
OTHER (IF NEEDED) _____
_____ : _____
_____ : _____
_____ : _____
_____ : _____
REFERENCE LATEST ERECTION DRAWINGS FOR MATERIAL & FABRICATION INFORMATION

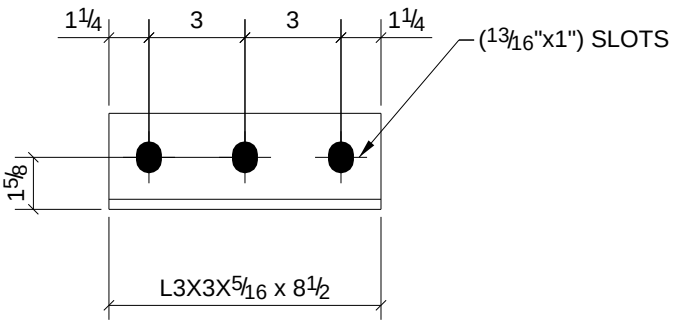

Qty.	In Assembly
2	B71

Qty.	Mark	Size	Length	Comments	Grade
2	a14	L3X3X5/16	0'-8 1/2"		A36

PROJECT NAME
OLDE ORCHARD ELEMENTARY SCHOOL

LOCATION
800 McNAUGHTEN RD. COLUMBUS, OHIO 43213

CUSTOMER
THOMAS AND MARKER CONSTRUCTION

ARCHITECT
BRAUN & STEIDL

NORTH CENTRAL FABRICATION
Mansfield, OH 44906
419-529-2744 FAX 419-529-5387 http://www.northcentralfabri

AISC CERTIFIED FABRICATOR

DESCRIPTION	DATE	DATE	JOB No.
ANGLE	05/27/2011		70234
	DRAWN BY TMc	DRAWN BY TAN	DRG No. a14

MATERIAL NOTE:
W-SHAPES, CHANNELS: ASTM A992
ANGLES, S-SHAPES: ASTM A36
PLATE AND BAR: ASTM A36
PIPE: ASTM A53, GRADE B
HSS: ASTM A500, GRADE B

PROCESS CONTROL
PROCESS BY
FAB: _____
FIT AND WELD: _____
INSPECTION: _____
OTHER (IF NEEDED) _____
_____ : _____
_____ : _____
_____ : _____
_____ : _____
REFERENCE LATEST ERECTION DRAWINGS FOR MATERIAL & FABRICATION INFORMATION

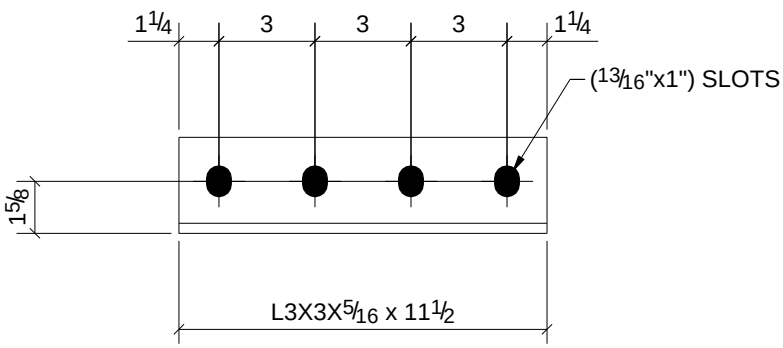

2	B18
Qty.	In Assembly

Qty.	Mark	Size	Length	Comments	Grade
2	a15	L3X3X5/16	0'-11 1/2"		A36

PROJECT NAME
OLDE ORCHARD ELEMENTARY SCHOOL

LOCATION
800 McNAUGHTEN RD. COLUMBUS, OHIO 43213

CUSTOMER
THOMAS AND MARKER CONSTRUCTION

ARCHITECT
BRAUN & STEIDL

NORTH CENTRAL FABRICATION
Mansfield, OH 44906
419-529-2744 FAX 419-529-5387 http://www.northcentralfabri

AISC CERTIFIED FABRICATOR

DESCRIPTION	DATE	DATE	JOB No.
ANGLE	05/24/2011		70234
	DRAWN BY TMc	DRAWN BY TAN	DRG No. a15

MATERIAL NOTE:
W-SHAPES, CHANNELS: ASTM A992
ANGLES, S-SHAPES: ASTM A36
PLATE AND BAR: ASTM A36
PIPE: ASTM A53, GRADE B
HSS: ASTM A500, GRADE B

PROCESS CONTROL
PROCESS BY
FAB: _____
FIT AND WELD: _____
INSPECTION: _____
OTHER (IF NEEDED) _____
_____ : _____
_____ : _____
_____ : _____
_____ : _____
REFERENCE LATEST ERECTION DRAWINGS FOR MATERIAL & FABRICATION INFORMATION

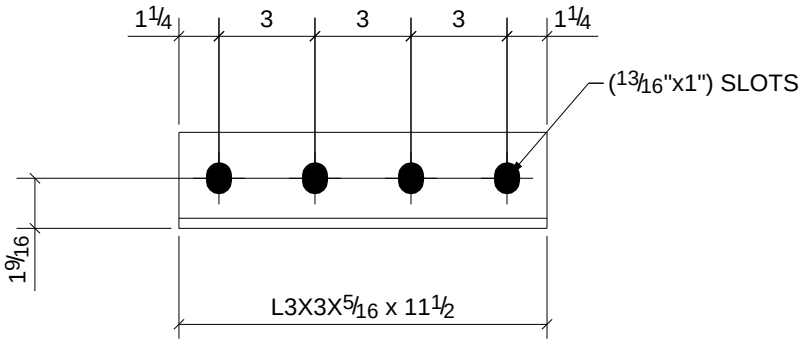

Qty.	In Assembly
4	B111

Qty.	Mark	Size	Length	Comments	Grade
4	a16	L3X3X5/16	0'-11 1/2"		A36

PROJECT NAME
OLDE ORCHARD ELEMENTARY SCHOOL

LOCATION
800 McNAUGHTEN RD. COLUMBUS, OHIO 43213

CUSTOMER
THOMAS AND MARKER CONSTRUCTION

ARCHITECT
BRAUN & STEIDL

NORTH CENTRAL FABRICATION
Mansfield, OH 44906
419-529-2744 FAX 419-529-5387 http://www.northcentralfabri

AISC CERTIFIED FABRICATOR

DESCRIPTION
ANGLE

DATE	DATE	JOB No.
05/24/2011		70234
DRAWN BY	DRAWN BY	DRG No.
TMc	TAN	a16

MATERIAL NOTE:
W-SHAPES, CHANNELS: ASTM A992
ANGLES, S-SHAPES: ASTM A36
PLATE AND BAR: ASTM A36
PIPE: ASTM A53, GRADE B
HSS: ASTM A500, GRADE B

PROCESS CONTROL
PROCESS BY
FAB: _____
FIT AND WELD: _____
INSPECTION: _____
OTHER (IF NEEDED) _____
_____ : _____
_____ : _____
_____ : _____
_____ : _____
REFERENCE LATEST ERECTION DRAWINGS FOR MATERIAL & FABRICATION INFORMATION

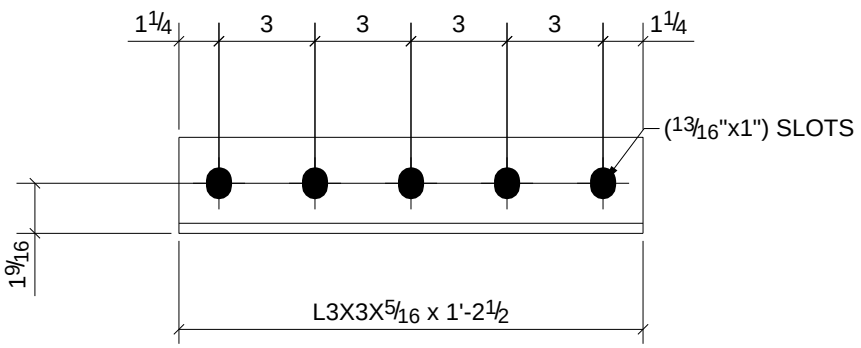

Qty.	In Assembly
2	B16

Qty.	Mark	Size	Length	Comments	Grade
2	a17	L3X3X5/16	1'-2 1/2"		A36

PROJECT NAME
OLDE ORCHARD ELEMENTARY SCHOOL

LOCATION
800 McNAUGHTEN RD. COLUMBUS, OHIO 43213

CUSTOMER
THOMAS AND MARKER CONSTRUCTION

ARCHITECT
BRAUN & STEIDL

NORTH CENTRAL FABRICATION
Mansfield, OH 44906
419-529-2744 FAX 419-529-5387 http://www.northcentralfabri

AISC CERTIFIED FABRICATOR

DESCRIPTION
ANGLE

DATE	DATE	JOB No.
05/24/2011		70234
DRAWN BY	DRAWN BY	DRG No.
TMc	TAN	a17

MATERIAL NOTE:
W-SHAPES, CHANNELS: ASTM A992
ANGLES, S-SHAPES: ASTM A36
PLATE AND BAR: ASTM A36
PIPE: ASTM A53, GRADE B
HSS: ASTM A500, GRADE B

PROCESS CONTROL
PROCESS BY
FAB: _____
FIT AND WELD: _____
INSPECTION: _____
OTHER (IF NEEDED) _____
_____ : _____
_____ : _____
_____ : _____
_____ : _____
REFERENCE LATEST ERECTION DRAWINGS FOR MATERIAL & FABRICATION INFORMATION

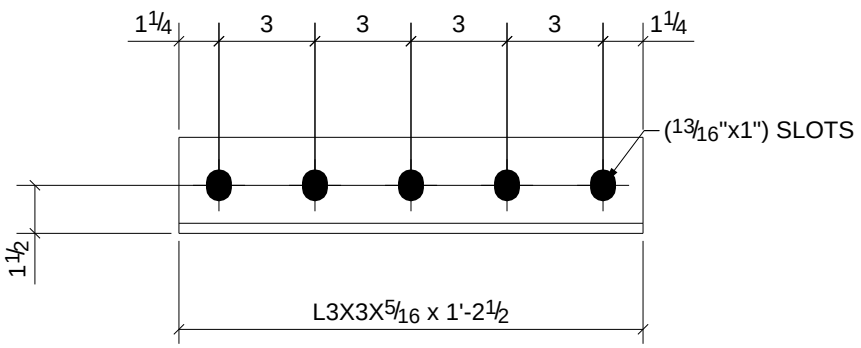

2	B46
2	B76
2	B95
Qty.	In Assembly

Qty.	Mark	Size	Length	Comments	Grade
6	a18	L3X3X5/16	1'-2 1/2"		A36

PROJECT NAME
OLDE ORCHARD ELEMENTARY SCHOOL

LOCATION
800 McNAUGHTEN RD. COLUMBUS, OHIO 43213

CUSTOMER
THOMAS AND MARKER CONSTRUCTION

ARCHITECT
BRAUN & STEIDL

NORTH CENTRAL FABRICATION
Mansfield, OH 44906
419-529-2744 FAX 419-529-5387 http://www.northcentralfabri

AISC CERTIFIED FABRICATOR

DESCRIPTION
ANGLE

DATE	DATE	JOB No.
05/24/2011		70234
DRAWN BY	DRAWN BY	DRG No.
TMc	TAN	a18

MATERIAL NOTE:
W-SHAPES, CHANNELS: ASTM A992
ANGLES, S-SHAPES: ASTM A36
PLATE AND BAR: ASTM A36
PIPE: ASTM A53, GRADE B
HSS: ASTM A500, GRADE B

PROCESS CONTROL
PROCESS BY
FAB: _____
FIT AND WELD: _____
INSPECTION: _____
OTHER (IF NEEDED) _____
_____ : _____
_____ : _____
_____ : _____
_____ : _____
REFERENCE LATEST ERECTION DRAWINGS FOR MATERIAL & FABRICATION INFORMATION

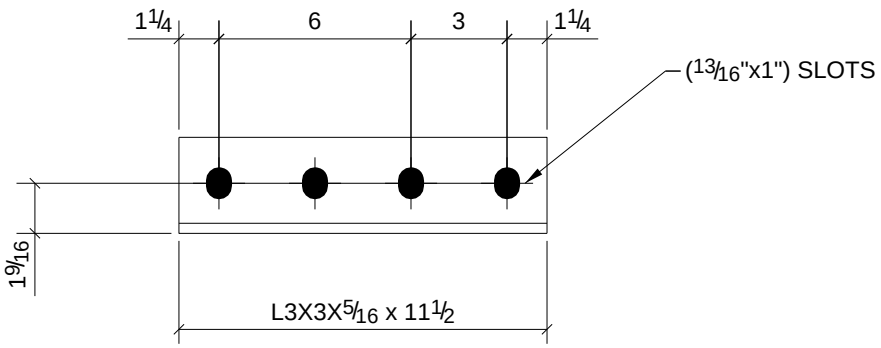

2	B36
4	B55
8	B66
4	B86
2	B98
8	B104
2	B123
2	B124
Qty.	In Assembly

Qty.	Mark	Size	Length	Comments	Grade
32	a19	L3X3X5/16	0'-11 1/2"		A36

PROJECT NAME
OLDE ORCHARD ELEMENTARY SCHOOL

LOCATION
800 McNAUGHTEN RD. COLUMBUS, OHIO 43213

CUSTOMER
THOMAS AND MARKER CONSTRUCTION

ARCHITECT
BRAUN & STEIDL

NORTH CENTRAL FABRICATION
Mansfield, OH 44906
419-529-2744 FAX 419-529-5387 http://www.northcentralfabri

AISC CERTIFIED FABRICATOR

DESCRIPTION
ANGLE

DATE	DATE	JOB No.
05/27/2011		70234
DRAWN BY	DRAWN BY	DRG No.
TMc	TAN	a19

MATERIAL NOTE:
W-SHAPES, CHANNELS: ASTM A992
ANGLES, S-SHAPES: ASTM A36
PLATE AND BAR: ASTM A36
PIPE: ASTM A53, GRADE B
HSS: ASTM A500, GRADE B

PROCESS CONTROL
PROCESS BY
FAB: _____
FIT AND WELD: _____
INSPECTION: _____
OTHER (IF NEEDED) _____
_____ : _____
_____ : _____
_____ : _____
_____ : _____
REFERENCE LATEST ERECTION DRAWINGS FOR MATERIAL & FABRICATION INFORMATION

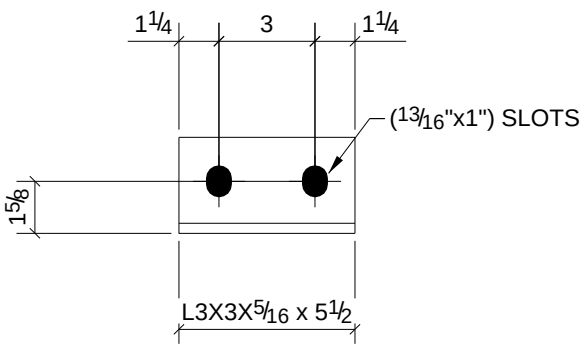

4	B2
4	B4
4	B7
4	B8
2	B30
20	B43
8	B45
2	B74
2	B91
12	B92
2	B116
Qty.	In Assembly

Qty.	Mark	Size	Length	Comments	Grade
64	a20	L3X3X5/16	0'-5 1/2"		A36

PROJECT NAME
OLDE ORCHARD ELEMENTARY SCHOOL

LOCATION
800 McNAUGHTEN RD. COLUMBUS, OHIO 43213

CUSTOMER
THOMAS AND MARKER CONSTRUCTION

ARCHITECT
BRAUN & STEIDL

NORTH CENTRAL FABRICATION
Mansfield, OH 44906
419-529-2744 FAX 419-529-5387 http://www.northcentralfabri

AISC CERTIFIED FABRICATOR

DESCRIPTION
ANGLE

DATE	DATE	JOB No.
05/24/2011		70234
DRAWN BY	DRAWN BY	DRG No.
TMc	TAN	a20

MATERIAL NOTE:
W-SHAPES, CHANNELS: ASTM A992
ANGLES, S-SHAPES: ASTM A36
PLATE AND BAR: ASTM A36
PIPE: ASTM A53, GRADE B
HSS: ASTM A500, GRADE B

PROCESS CONTROL
PROCESS BY
FAB: _____
FIT AND WELD: _____
INSPECTION: _____
OTHER (IF NEEDED) _____
_____ : _____
_____ : _____
_____ : _____
_____ : _____
REFERENCE LATEST ERECTION DRAWINGS FOR MATERIAL & FABRICATION INFORMATION

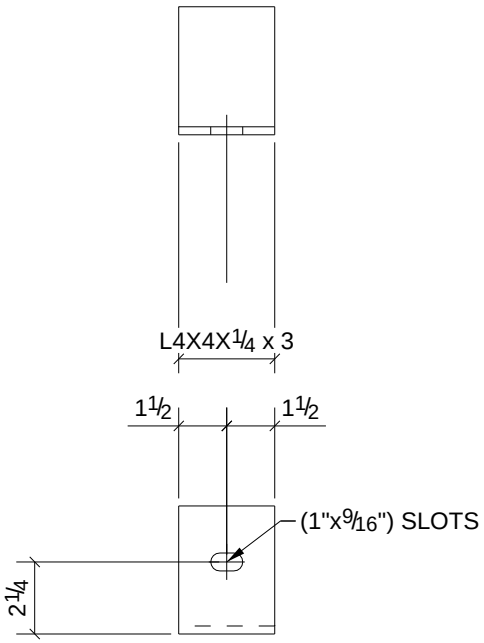

1	B77
2	C13
4	C15
2	C17
Qty.	In Assembly

Qty.	Mark	Size	Length	Comments	Grade
9	a97	L4X4X1/4	0'-3"		A36

PROJECT NAME
OLDE ORCHARD ELEMENTARY SCHOOL

LOCATION
800 McNAUGHTEN RD. COLUMBUS, OHIO 43213

CUSTOMER
THOMAS AND MARKER CONSTRUCTION

ARCHITECT
BRAUN & STEIDL

NORTH CENTRAL FABRICATION
Mansfield, OH 44906
419-529-2744 FAX 419-529-5387 http://www.northcentralfabri

AISC CERTIFIED FABRICATOR

DESCRIPTION	DATE	DATE	JOB No.
ANGLE	05/27/2011		70234
	DRAWN BY TMc	DRAWN BY TAN	DRG No. a97

MATERIAL NOTE:
W-SHAPES, CHANNELS: ASTM A992
ANGLES, S-SHAPES: ASTM A36
PLATE AND BAR: ASTM A36
PIPE: ASTM A53, GRADE B
HSS: ASTM A500, GRADE B

PROCESS CONTROL
PROCESS BY
FAB: _____
FIT AND WELD: _____
INSPECTION: _____
OTHER (IF NEEDED) _____
_____ : _____
_____ : _____
_____ : _____
_____ : _____
REFERENCE LATEST ERECTION DRAWINGS FOR MATERIAL & FABRICATION INFORMATION

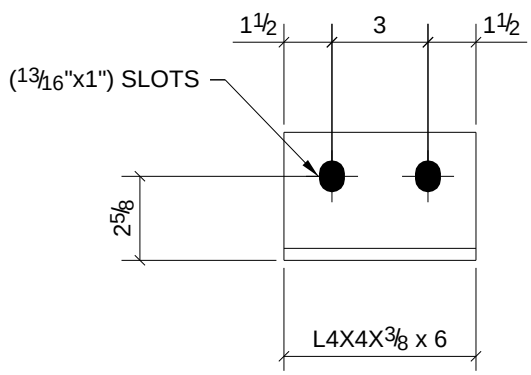

Qty.	In Assembly
2	B128

Qty.	Mark	Size	Length	Comments	Grade
2	a98	L4X4X3/8	0'-6"		A36

PROJECT NAME
OLDE ORCHARD ELEMENTARY SCHOOL

LOCATION
800 McNAUGHTEN RD. COLUMBUS, OHIO 43213

CUSTOMER
THOMAS AND MARKER CONSTRUCTION

ARCHITECT
BRAUN & STEIDL

NORTH CENTRAL FABRICATION
Mansfield, OH 44906
419-529-2744 FAX 419-529-5387 http://www.northcentralfabri

AISC CERTIFIED FABRICATOR

DESCRIPTION
ANGLE

DATE	DATE	JOB No.
05/28/2011		70234
DRAWN BY	DRAWN BY	DRG No.
TMc	TAN	a98

MATERIAL NOTE:
W-SHAPES, CHANNELS: ASTM A992
ANGLES, S-SHAPES: ASTM A36
PLATE AND BAR: ASTM A36
PIPE: ASTM A53, GRADE B
HSS: ASTM A500, GRADE B

PROCESS CONTROL
PROCESS BY
FAB: _____
FIT AND WELD: _____
INSPECTION: _____
OTHER (IF NEEDED) _____
_____ : _____
_____ : _____
_____ : _____
_____ : _____
REFERENCE LATEST ERECTION DRAWINGS FOR MATERIAL & FABRICATION INFORMATION

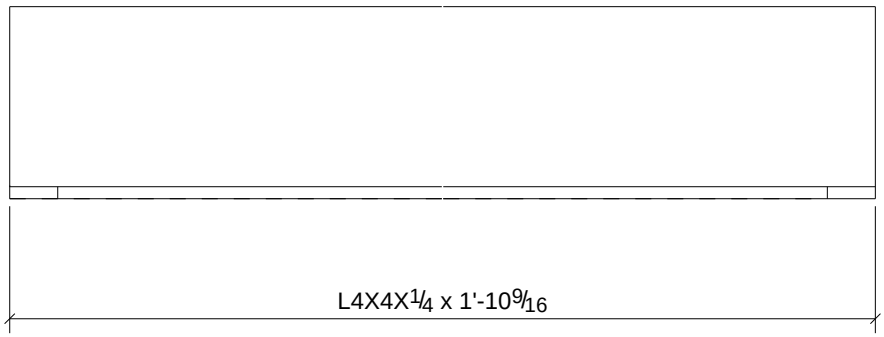

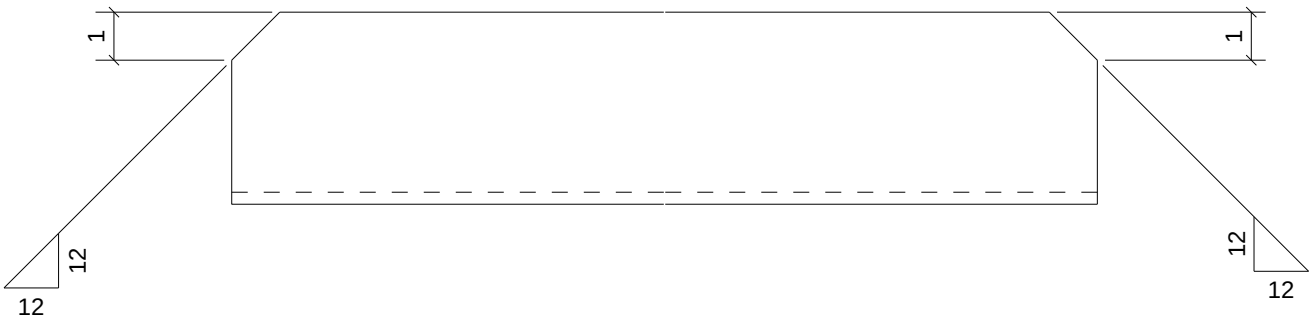

5	B89
Qty.	In Assembly

Qty.	Mark	Size	Length	Comments	Grade
5	a100	L4X4X1/4	1'-10 9/16"		A36

PROJECT NAME
OLDE ORCHARD ELEMENTARY SCHOOL

LOCATION
800 McNAUGHTEN RD. COLUMBUS, OHIO 43213

CUSTOMER
THOMAS AND MARKER CONSTRUCTION

ARCHITECT
BRAUN & STEIDL

NORTH CENTRAL FABRICATION
Mansfield, OH 44906
419-529-2744 FAX 419-529-5387 http://www.northcentralfabri

AISC CERTIFIED FABRICATOR

DESCRIPTION	DATE	DATE	JOB No.
ANGLE	05/27/2011		70234
	DRAWN BY TMc	DRAWN BY TAN	DRG No. a100

MATERIAL NOTE:
W-SHAPES, CHANNELS: ASTM A992
ANGLES, S-SHAPES: ASTM A36
PLATE AND BAR: ASTM A36
PIPE: ASTM A53, GRADE B
HSS: ASTM A500, GRADE B

PROCESS CONTROL
PROCESS BY
FAB: _____
FIT AND WELD: _____
INSPECTION: _____
OTHER (IF NEEDED) _____
_____ : _____
_____ : _____
_____ : _____
_____ : _____
REFERENCE LATEST ERECTION DRAWINGS FOR MATERIAL & FABRICATION INFORMATION

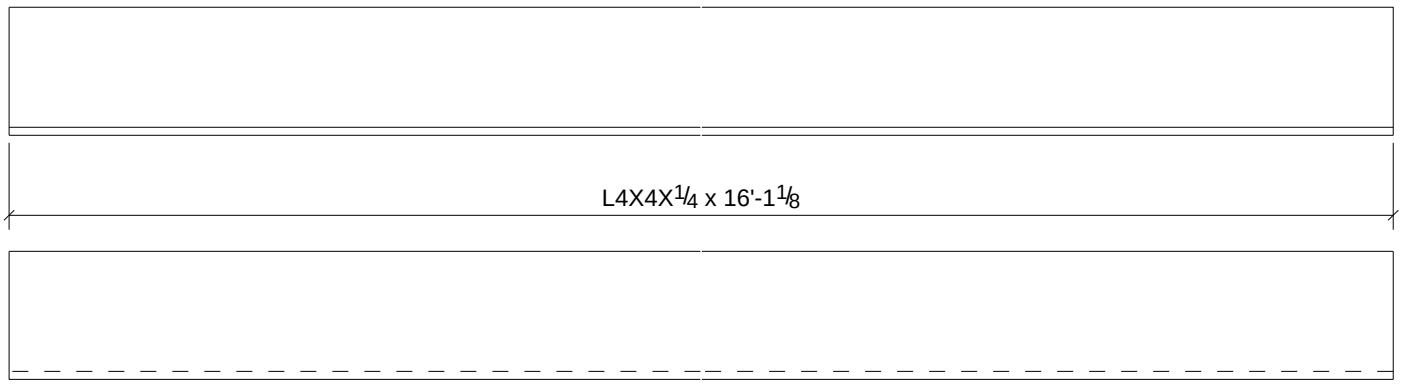

1	B23
Qty.	In Assembly

Qty.	Mark	Size	Length	Comments	Grade
1	a102	L4X4X1/4	16'-1 1/8"		A36

PROJECT NAME
OLDE ORCHARD ELEMENTARY SCHOOL

LOCATION
800 McNAUGHTEN RD. COLUMBUS, OHIO 43213

CUSTOMER
THOMAS AND MARKER CONSTRUCTION

ARCHITECT
BRAUN & STEIDL

NORTH CENTRAL FABRICATION
Mansfield, OH 44906
419-529-2744 FAX 419-529-5387 http://www.northcentralfabri

AISC CERTIFIED FABRICATOR

DESCRIPTION	DATE	DATE	JOB No.
ANGLE	05/27/2011		70234
	DRAWN BY TMc	DRAWN BY TAN	DRG No. a102

MATERIAL NOTE:
W-SHAPES, CHANNELS: ASTM A992
ANGLES, S-SHAPES: ASTM A36
PLATE AND BAR: ASTM A36
PIPE: ASTM A53, GRADE B
HSS: ASTM A500, GRADE B

PROCESS CONTROL
PROCESS BY
FAB: _____
FIT AND WELD: _____
INSPECTION: _____
OTHER (IF NEEDED) _____
_____ : _____
_____ : _____
_____ : _____
_____ : _____
REFERENCE LATEST ERECTION DRAWINGS FOR MATERIAL & FABRICATION INFORMATION

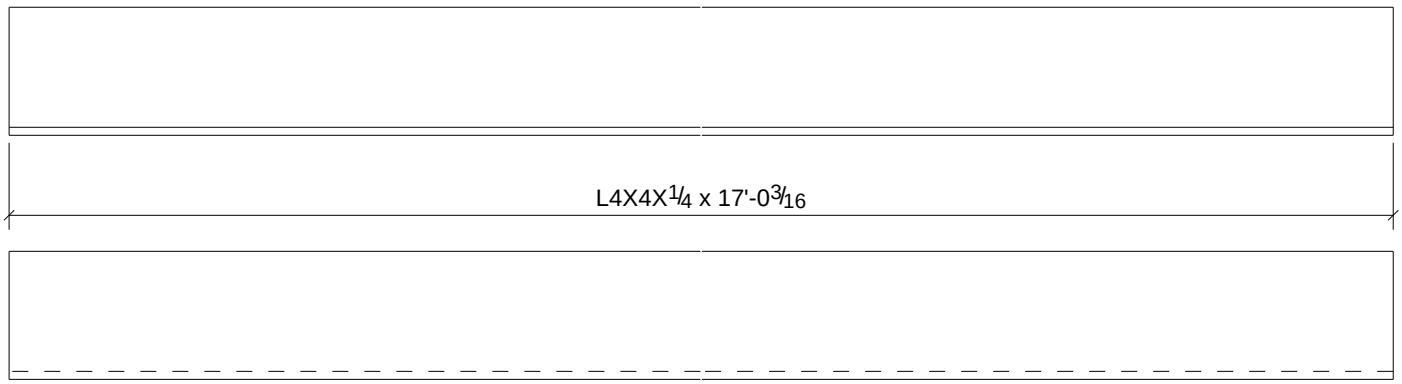

1	B25
Qty.	In Assembly

Qty.	Mark	Size	Length	Comments	Grade
1	a104	L4X4X1/4	17'-0 3/16"		A36

PROJECT NAME
OLDE ORCHARD ELEMENTARY SCHOOL

LOCATION
800 McNAUGHTEN RD. COLUMBUS, OHIO 43213

CUSTOMER
THOMAS AND MARKER CONSTRUCTION

ARCHITECT
BRAUN & STEIDL

NORTH CENTRAL FABRICATION
Mansfield, OH 44906
419-529-2744 FAX 419-529-5387 http://www.northcentralfabri

AISC CERTIFIED FABRICATOR

DESCRIPTION	DATE	DATE	JOB No.
ANGLE	05/27/2011		70234
	DRAWN BY TMc	DRAWN BY TAN	DRG No. a104

MATERIAL NOTE:
W-SHAPES, CHANNELS: ASTM A992
ANGLES, S-SHAPES: ASTM A36
PLATE AND BAR: ASTM A36
PIPE: ASTM A53, GRADE B
HSS: ASTM A500, GRADE B

PROCESS CONTROL
PROCESS BY
FAB: _____
FIT AND WELD: _____
INSPECTION: _____
OTHER (IF NEEDED) _____
_____ : _____
_____ : _____
_____ : _____
_____ : _____
REFERENCE LATEST ERECTION DRAWINGS FOR MATERIAL & FABRICATION INFORMATION

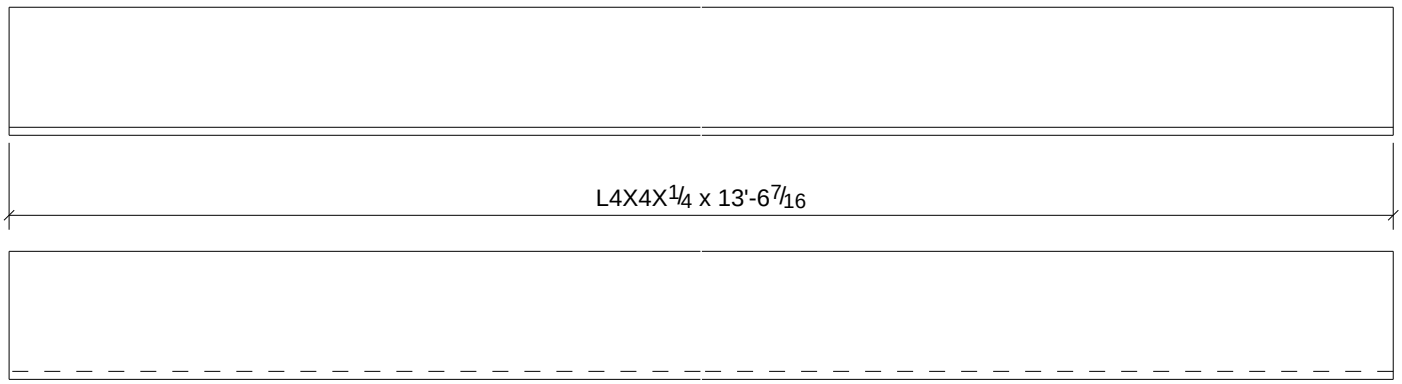

Qty.	In Assembly
1	B89

Qty.	Mark	Size	Length	Comments	Grade
1	a112	L4X4X1/4	13'-6 7/16"		A36

PROJECT NAME
OLDE ORCHARD ELEMENTARY SCHOOL

LOCATION
800 McNAUGHTEN RD. COLUMBUS, OHIO 43213

CUSTOMER
THOMAS AND MARKER CONSTRUCTION

ARCHITECT
BRAUN & STEIDL

NORTH CENTRAL FABRICATION
Mansfield, OH 44906
419-529-2744 FAX 419-529-5387 http://www.northcentralfabri

AISC CERTIFIED FABRICATOR

DESCRIPTION	DATE	DATE	JOB No.
ANGLE	05/27/2011		70234
	DRAWN BY TMc	DRAWN BY TAN	DRG No. a112

MATERIAL NOTE:
W-SHAPES, CHANNELS: ASTM A992
ANGLES, S-SHAPES: ASTM A36
PLATE AND BAR: ASTM A36
PIPE: ASTM A53, GRADE B
HSS: ASTM A500, GRADE B

PROCESS CONTROL
PROCESS BY
FAB: _____
FIT AND WELD: _____
INSPECTION: _____
OTHER (IF NEEDED) _____
_____ : _____
_____ : _____
_____ : _____
_____ : _____
REFERENCE LATEST ERECTION DRAWINGS FOR MATERIAL & FABRICATION INFORMATION

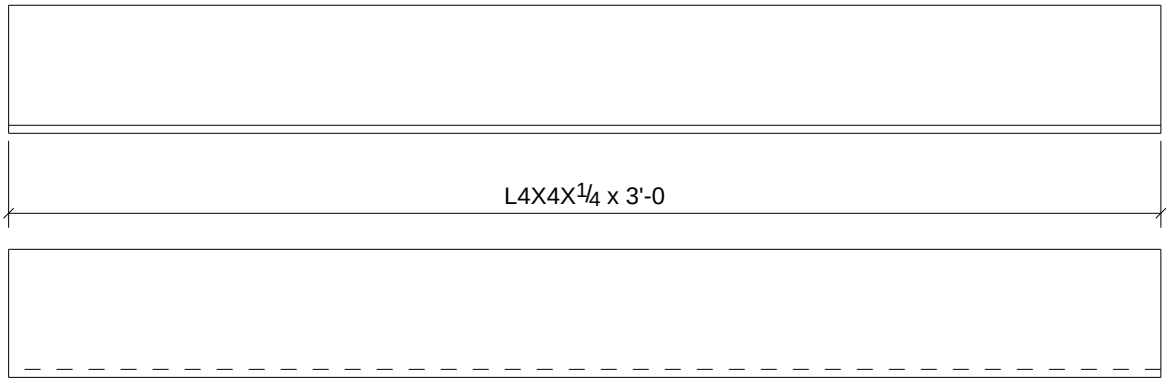

Qty.	In Assembly
1	B109

Qty.	Mark	Size	Length	Comments	Grade
1	a113	L4X4X1/4	3'-0"		A36

PROJECT NAME
OLDE ORCHARD ELEMENTARY SCHOOL

LOCATION
800 McNAUGHTEN RD. COLUMBUS, OHIO 43213

CUSTOMER
THOMAS AND MARKER CONSTRUCTION

ARCHITECT
BRAUN & STEIDL

NORTH CENTRAL FABRICATION
Mansfield, OH 44906
419-529-2744 FAX 419-529-5387 http://www.northcentralfabri

AISC CERTIFIED FABRICATOR

DESCRIPTION	DATE	DATE	JOB No.
ANGLE	05/27/2011		70234
	DRAWN BY TMc	DRAWN BY TAN	DRG No. a113

MATERIAL NOTE:
W-SHAPES, CHANNELS: ASTM A992
ANGLES, S-SHAPES: ASTM A36
PLATE AND BAR: ASTM A36
PIPE: ASTM A53, GRADE B
HSS: ASTM A500, GRADE B

PROCESS CONTROL
PROCESS BY
FAB: _____
FIT AND WELD: _____
INSPECTION: _____
OTHER (IF NEEDED) _____
_____ : _____
_____ : _____
_____ : _____
_____ : _____
REFERENCE LATEST ERECTION DRAWINGS FOR MATERIAL & FABRICATION INFORMATION

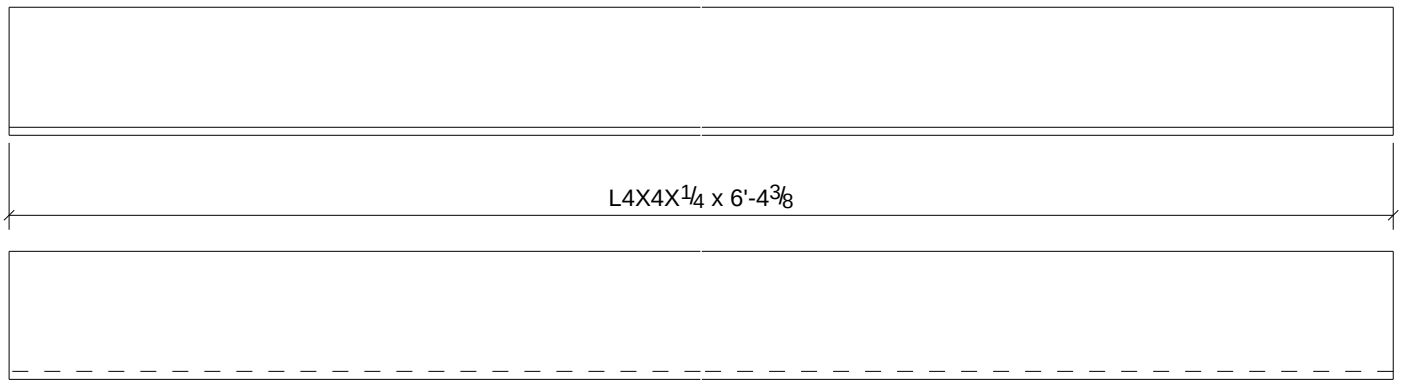

Qty.	In Assembly
1	B108

Qty.	Mark	Size	Length	Comments	Grade
1	a114	L4X4X1/4	6'-4 3/8"		A36

PROJECT NAME
OLDE ORCHARD ELEMENTARY SCHOOL

LOCATION
800 McNAUGHTEN RD. COLUMBUS, OHIO 43213

CUSTOMER
THOMAS AND MARKER CONSTRUCTION

ARCHITECT
BRAUN & STEIDL

NORTH CENTRAL FABRICATION
Mansfield, OH 44906
419-529-2744 FAX 419-529-5387 http://www.northcentralfabri

AISC CERTIFIED FABRICATOR

DESCRIPTION	DATE	DATE	JOB No.
ANGLE	05/27/2011		70234
	DRAWN BY TMc	DRAWN BY TAN	DRG No. a114

MATERIAL NOTE:
W-SHAPES, CHANNELS: ASTM A992
ANGLES, S-SHAPES: ASTM A36
PLATE AND BAR: ASTM A36
PIPE: ASTM A53, GRADE B
HSS: ASTM A500, GRADE B

PROCESS CONTROL
PROCESS BY
FAB: _____
FIT AND WELD: _____
INSPECTION: _____
OTHER (IF NEEDED) _____
_____ : _____
_____ : _____
_____ : _____
_____ : _____
REFERENCE LATEST ERECTION DRAWINGS FOR MATERIAL & FABRICATION INFORMATION

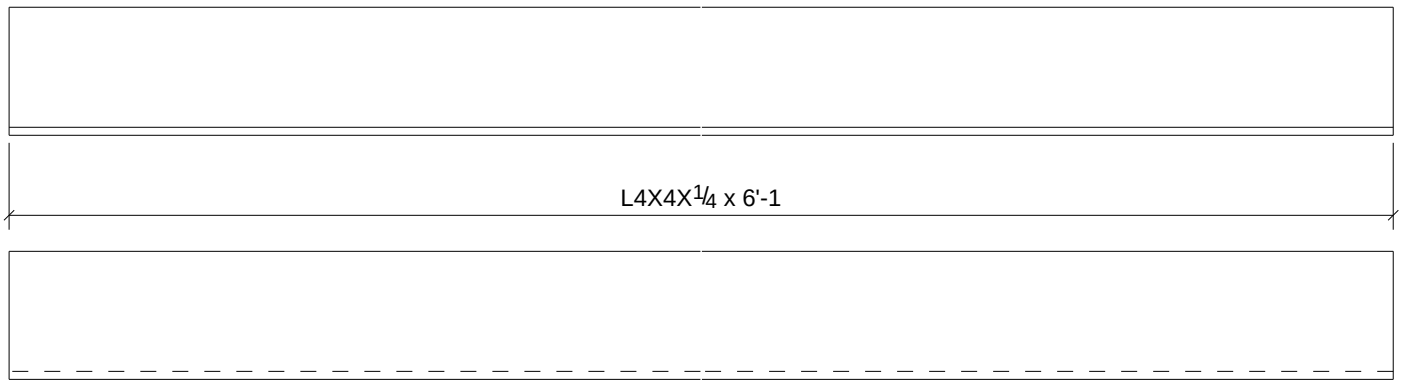

Qty.	In Assembly
1	B101

Qty.	Mark	Size	Length	Comments	Grade
1	a115	L4X4X1/4	6'-1"		A36

PROJECT NAME
OLDE ORCHARD ELEMENTARY SCHOOL

LOCATION
800 McNAUGHTEN RD. COLUMBUS, OHIO 43213

CUSTOMER
THOMAS AND MARKER CONSTRUCTION

ARCHITECT
BRAUN & STEIDL

NORTH CENTRAL FABRICATION
Mansfield, OH 44906
419-529-2744 FAX 419-529-5387 http://www.northcentralfabri

AISC CERTIFIED FABRICATOR

DESCRIPTION	DATE	DATE	JOB No.
ANGLE	05/27/2011		70234
	DRAWN BY TMc	DRAWN BY TAN	DRG No. a115

MATERIAL NOTE:
W-SHAPES, CHANNELS: ASTM A992
ANGLES, S-SHAPES: ASTM A36
PLATE AND BAR: ASTM A36
PIPE: ASTM A53, GRADE B
HSS: ASTM A500, GRADE B

PROCESS CONTROL
PROCESS BY
FAB: _____
FIT AND WELD: _____
INSPECTION: _____
OTHER (IF NEEDED) _____
_____ : _____
_____ : _____
_____ : _____
_____ : _____
REFERENCE LATEST ERECTION DRAWINGS FOR MATERIAL & FABRICATION INFORMATION

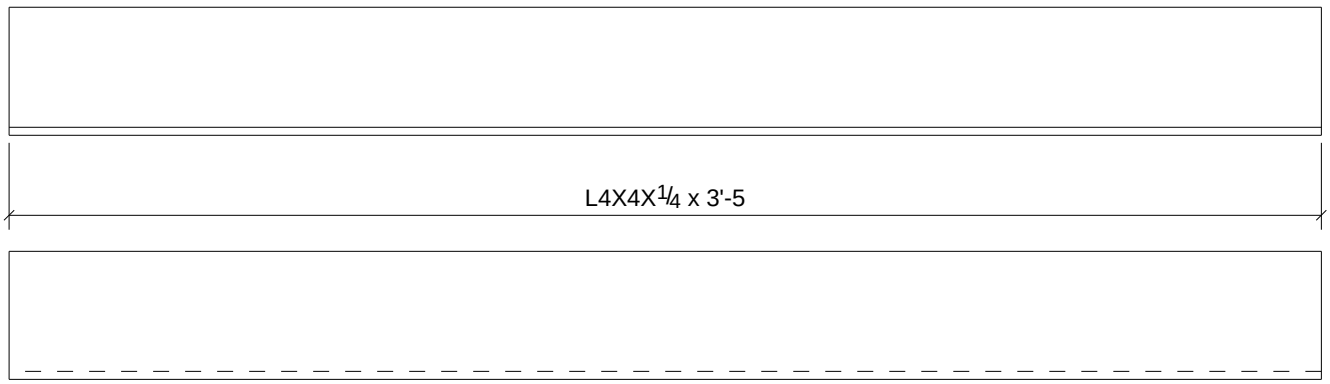

Qty.	In Assembly
1	B102

Qty.	Mark	Size	Length	Comments	Grade
1	a116	L4X4X1/4	3'-5"		A36

PROJECT NAME
OLDE ORCHARD ELEMENTARY SCHOOL

LOCATION
800 McNAUGHTEN RD. COLUMBUS, OHIO 43213

CUSTOMER
THOMAS AND MARKER CONSTRUCTION

ARCHITECT
BRAUN & STEIDL

NORTH CENTRAL FABRICATION
Mansfield, OH 44906
419-529-2744 FAX 419-529-5387 http://www.northcentralfabri

AISC CERTIFIED FABRICATOR

DESCRIPTION	DATE	DATE	JOB No.
ANGLE	05/27/2011		70234
	DRAWN BY TMc	DRAWN BY TAN	DRG No. a116

MATERIAL NOTE:
W-SHAPES, CHANNELS: ASTM A992
ANGLES, S-SHAPES: ASTM A36
PLATE AND BAR: ASTM A36
PIPE: ASTM A53, GRADE B
HSS: ASTM A500, GRADE B

PROCESS CONTROL
PROCESS BY
FAB: _____
FIT AND WELD: _____
INSPECTION: _____
OTHER (IF NEEDED) _____
_____ : _____
_____ : _____
_____ : _____
_____ : _____
REFERENCE LATEST ERECTION DRAWINGS FOR MATERIAL & FABRICATION INFORMATION

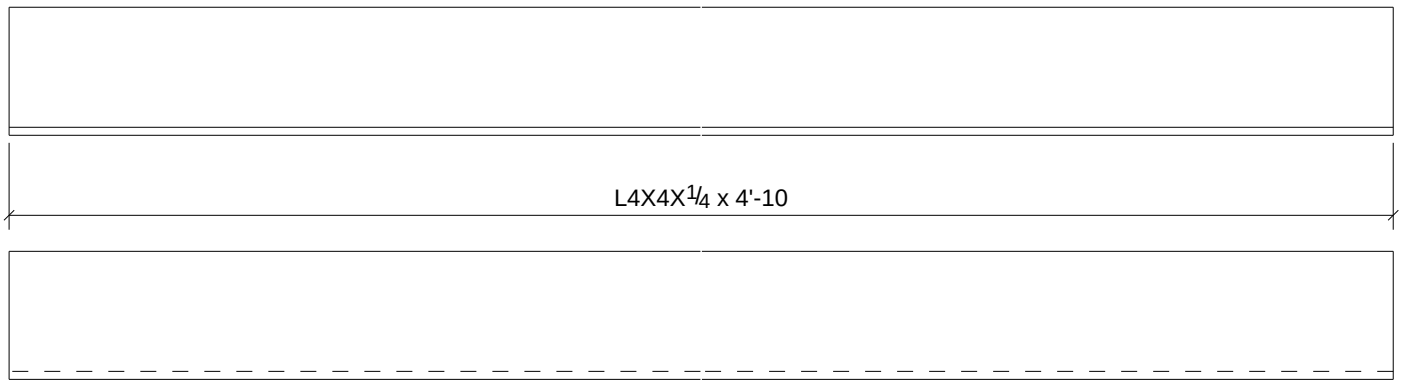

Qty.	In Assembly
1	B114

Qty.	Mark	Size	Length	Comments	Grade
1	a117	L4X4X1/4	4'-10"		A36

PROJECT NAME
OLDE ORCHARD ELEMENTARY SCHOOL

LOCATION
800 McNAUGHTEN RD. COLUMBUS, OHIO 43213

CUSTOMER
THOMAS AND MARKER CONSTRUCTION

ARCHITECT
BRAUN & STEIDL

NORTH CENTRAL FABRICATION
Mansfield, OH 44906
419-529-2744 FAX 419-529-5387 http://www.northcentralfabri

AISC CERTIFIED FABRICATOR

DESCRIPTION	DATE	DATE	JOB No.
ANGLE	05/27/2011		70234
	DRAWN BY TMc	DRAWN BY TAN	DRG No. a117

MATERIAL NOTE:
W-SHAPES, CHANNELS: ASTM A992
ANGLES, S-SHAPES: ASTM A36
PLATE AND BAR: ASTM A36
PIPE: ASTM A53, GRADE B
HSS: ASTM A500, GRADE B

PROCESS CONTROL
PROCESS BY
FAB: _____
FIT AND WELD: _____
INSPECTION: _____
OTHER (IF NEEDED) _____
_____ : _____
_____ : _____
_____ : _____
_____ : _____
REFERENCE LATEST ERECTION DRAWINGS FOR MATERIAL & FABRICATION INFORMATION

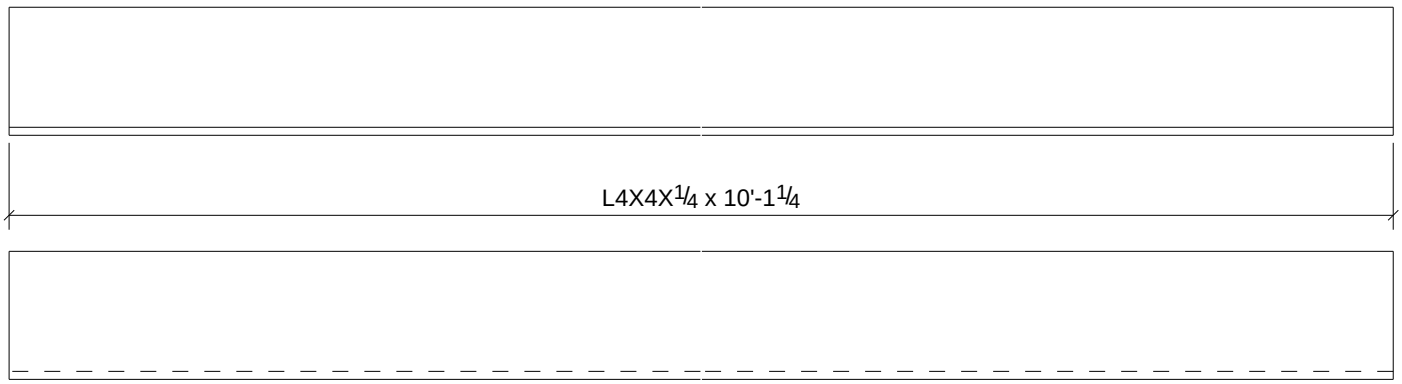

Qty.	In Assembly
1	B89

Qty.	Mark	Size	Length	Comments	Grade
1	a118	L4X4X1/4	10'-1 1/4"		A36

PROJECT NAME
OLDE ORCHARD ELEMENTARY SCHOOL

LOCATION
800 McNAUGHTEN RD. COLUMBUS, OHIO 43213

CUSTOMER
THOMAS AND MARKER CONSTRUCTION

ARCHITECT
BRAUN & STEIDL

NORTH CENTRAL FABRICATION
Mansfield, OH 44906
419-529-2744 FAX 419-529-5387 http://www.northcentralfabri

AISC CERTIFIED FABRICATOR

DESCRIPTION	DATE	DATE	JOB No.
ANGLE	05/27/2011		70234
	DRAWN BY TMc	DRAWN BY TAN	DRG No. a118

MATERIAL NOTE:
W-SHAPES, CHANNELS: ASTM A992
ANGLES, S-SHAPES: ASTM A36
PLATE AND BAR: ASTM A36
PIPE: ASTM A53, GRADE B
HSS: ASTM A500, GRADE B

PROCESS CONTROL
PROCESS BY
FAB: _____
FIT AND WELD: _____
INSPECTION: _____
OTHER (IF NEEDED) _____
_____ : _____
_____ : _____
_____ : _____
_____ : _____
REFERENCE LATEST ERECTION DRAWINGS FOR MATERIAL & FABRICATION INFORMATION

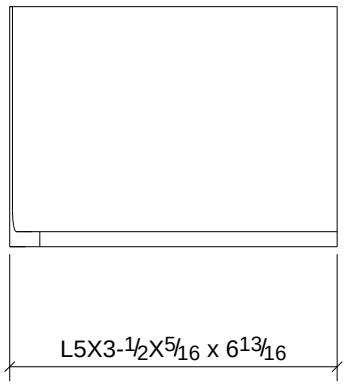

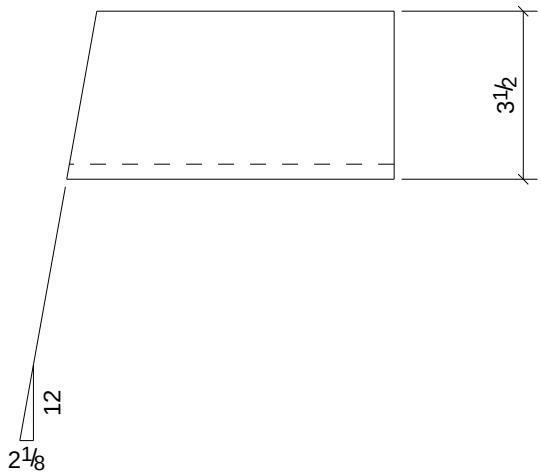

1	B42
Qty.	In Assembly

Qty.	Mark	Size	Length	Comments	Grade
1	a120	L5X3-1/2X5/16	0'-6 13/16"		A36

PROJECT NAME
OLDE ORCHARD ELEMENTARY SCHOOL

LOCATION
800 McNAUGHTEN RD. COLUMBUS, OHIO 43213

CUSTOMER
THOMAS AND MARKER CONSTRUCTION

ARCHITECT
BRAUN & STEIDL

NORTH CENTRAL FABRICATION
Mansfield, OH 44906
419-529-2744 FAX 419-529-5387 http://www.northcentralfabri

AISC CERTIFIED FABRICATOR

DESCRIPTION	DATE	DATE	JOB No.
ANGLE	05/27/2011		70234
	DRAWN BY TMc	DRAWN BY TAN	DRG No. a120

MATERIAL NOTE:
W-SHAPES, CHANNELS: ASTM A992
ANGLES, S-SHAPES: ASTM A36
PLATE AND BAR: ASTM A36
PIPE: ASTM A53, GRADE B
HSS: ASTM A500, GRADE B

PROCESS CONTROL
PROCESS BY
FAB: _____
FIT AND WELD: _____
INSPECTION: _____
OTHER (IF NEEDED) _____
_____ : _____
_____ : _____
_____ : _____
_____ : _____
REFERENCE LATEST ERECTION DRAWINGS FOR MATERIAL & FABRICATION INFORMATION

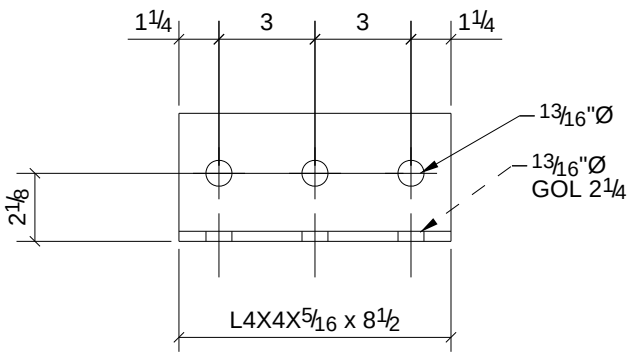

Qty.	In Assembly
4	B85

Qty.	Mark	Size	Length	Comments	Grade
4	a189	L4X4X5/16	0'-8 1/2"		A36

PROJECT NAME
OLDE ORCHARD ELEMENTARY SCHOOL

LOCATION
800 McNAUGHTEN RD. COLUMBUS, OHIO 43213

CUSTOMER
THOMAS AND MARKER CONSTRUCTION

ARCHITECT
BRAUN & STEIDL

NORTH CENTRAL FABRICATION
Mansfield, OH 44906
419-529-2744 FAX 419-529-5387 http://www.northcentralfabri

AISC CERTIFIED FABRICATOR

DESCRIPTION
ANGLE

DATE	DATE	JOB No.
05/24/2011		70234
DRAWN BY	DRAWN BY	DRG No.
TMc	TAN	a189

MATERIAL NOTE:
W-SHAPES, CHANNELS: ASTM A992
ANGLES, S-SHAPES: ASTM A36
PLATE AND BAR: ASTM A36
PIPE: ASTM A53, GRADE B
HSS: ASTM A500, GRADE B

PROCESS CONTROL
PROCESS BY
FAB: _____
FIT AND WELD: _____
INSPECTION: _____
OTHER (IF NEEDED)
_____ : _____
_____ : _____
_____ : _____
_____ : _____
REFERENCE LATEST ERECTION DRAWINGS FOR MATERIAL & FABRICATION INFORMATION

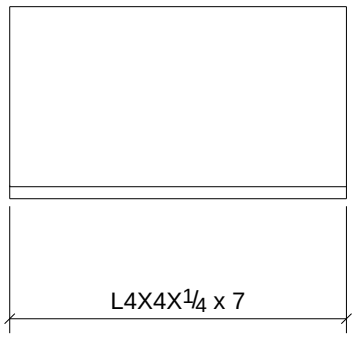

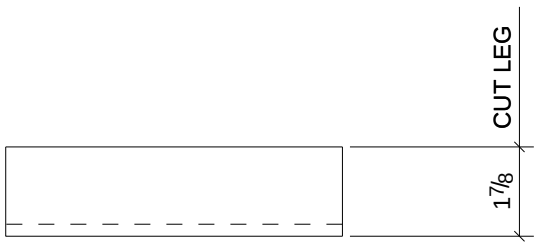

Qty.	In Assembly
1	B114

Qty.	Mark	Size	Length	Comments	Grade
1	a200	L4X4X1/4	0'-7"		A36

PROJECT NAME
OLDE ORCHARD ELEMENTARY SCHOOL

LOCATION
800 McNAUGHTEN RD. COLUMBUS, OHIO 43213

CUSTOMER
THOMAS AND MARKER CONSTRUCTION

ARCHITECT
BRAUN & STEIDL

NORTH CENTRAL FABRICATION
Mansfield, OH 44906
419-529-2744 FAX 419-529-5387 http://www.northcentralfabri

AISC CERTIFIED FABRICATOR

DESCRIPTION
ANGLE

DATE	DATE	JOB No.
05/27/2011		70234
DRAWN BY	DRAWN BY	DRG No.
TMc	TAN	a200

MATERIAL NOTE:
W-SHAPES, CHANNELS: ASTM A992
ANGLES, S-SHAPES: ASTM A36
PLATE AND BAR: ASTM A36
PIPE: ASTM A53, GRADE B
HSS: ASTM A500, GRADE B

PROCESS CONTROL
PROCESS BY
FAB: _____
FIT AND WELD: _____
INSPECTION: _____
OTHER (IF NEEDED)
_____ : _____
_____ : _____
_____ : _____
_____ : _____
REFERENCE LATEST ERECTION DRAWINGS FOR MATERIAL & FABRICATION INFORMATION

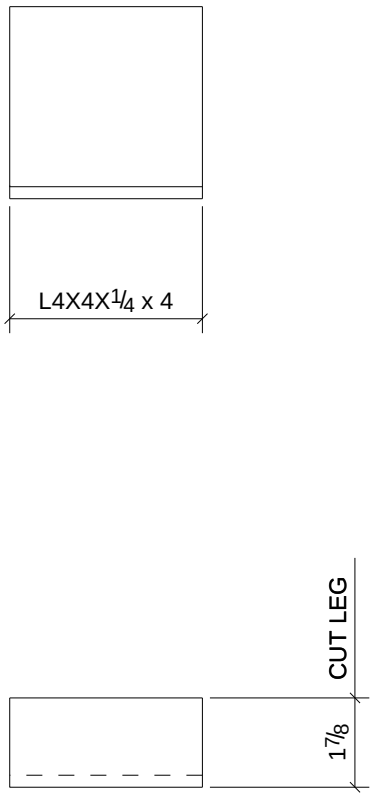

1	B114
Qty.	In Assembly

Qty.	Mark	Size	Length	Comments	Grade
1	a201	L4X4X1/4	0'-4"		A36

PROJECT NAME
OLDE ORCHARD ELEMENTARY SCHOOL

LOCATION
800 McNAUGHTEN RD. COLUMBUS, OHIO 43213

CUSTOMER
THOMAS AND MARKER CONSTRUCTION

ARCHITECT
BRAUN & STEIDL

NORTH CENTRAL FABRICATION
Mansfield, OH 44906
419-529-2744 FAX 419-529-5387 http://www.northcentralfabri

AISC CERTIFIED FABRICATOR

DESCRIPTION	DATE	DATE	JOB No.
ANGLE	05/27/2011		70234
	DRAWN BY TMc	DRAWN BY TAN	DRG No. a201

MATERIAL NOTE:
W-SHAPES, CHANNELS: ASTM A992
ANGLES, S-SHAPES: ASTM A36
PLATE AND BAR: ASTM A36
PIPE: ASTM A53, GRADE B
HSS: ASTM A500, GRADE B

PROCESS CONTROL
PROCESS BY
FAB: _____
FIT AND WELD: _____
INSPECTION: _____
OTHER (IF NEEDED) _____
_____ : _____
_____ : _____
_____ : _____
_____ : _____
REFERENCE LATEST ERECTION DRAWINGS FOR MATERIAL & FABRICATION INFORMATION

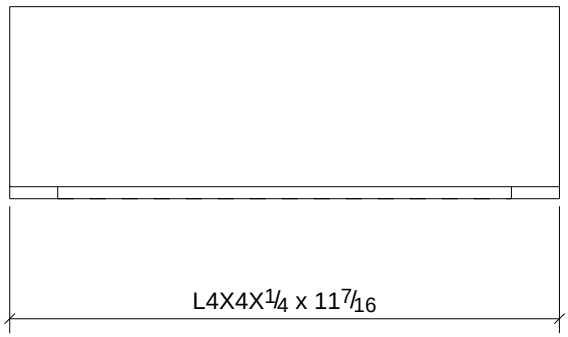

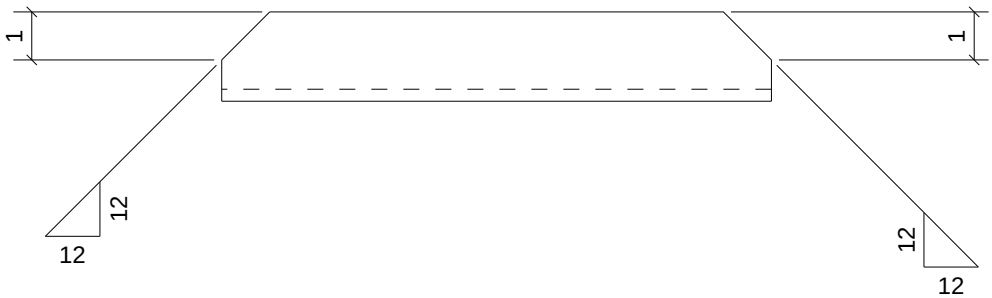

2	B101
2	B102
2	B108
1	B109
1	B114
Qty.	In Assembly

Qty.	Mark	Size	Length	Comments	Grade
8	a202	L4X4X1/4	0'-11 7/16"		A36

PROJECT NAME
OLDE ORCHARD ELEMENTARY SCHOOL

LOCATION
800 McNAUGHTEN RD. COLUMBUS, OHIO 43213

CUSTOMER
THOMAS AND MARKER CONSTRUCTION

ARCHITECT
BRAUN & STEIDL

NORTH CENTRAL FABRICATION
Mansfield, OH 44906
419-529-2744 FAX 419-529-5387 http://www.northcentralfabri

AISC CERTIFIED FABRICATOR

DESCRIPTION
ANGLE

DATE	DATE	JOB No.
05/27/2011		70234
DRAWN BY	DRAWN BY	DRG No.
TMc	TAN	a202

MATERIAL NOTE:
W-SHAPES, CHANNELS: ASTM A992
ANGLES, S-SHAPES: ASTM A36
PLATE AND BAR: ASTM A36
PIPE: ASTM A53, GRADE B
HSS: ASTM A500, GRADE B

PROCESS CONTROL
PROCESS BY
FAB: _____
FIT AND WELD: _____
INSPECTION: _____
OTHER (IF NEEDED) _____
_____ : _____
_____ : _____
_____ : _____
_____ : _____
REFERENCE LATEST ERECTION DRAWINGS FOR MATERIAL & FABRICATION INFORMATION

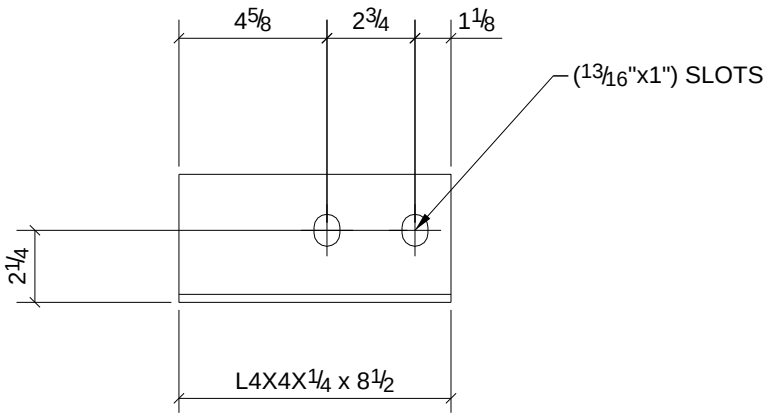

3	B88
3	B105
Qty.	In Assembly

Qty.	Mark	Size	Length	Comments	Grade
6	a210	L4X4X1/4	0'-8 1/2"		A36

PROJECT NAME
OLDE ORCHARD ELEMENTARY SCHOOL

LOCATION
800 McNAUGHTEN RD. COLUMBUS, OHIO 43213

CUSTOMER
THOMAS AND MARKER CONSTRUCTION

ARCHITECT
BRAUN & STEIDL

NORTH CENTRAL FABRICATION
Mansfield, OH 44906
419-529-2744 FAX 419-529-5387 http://www.northcentralfabri

AISC CERTIFIED FABRICATOR

DESCRIPTION
ANGLE

DATE	DATE	JOB No.
05/27/2011		70234
DRAWN BY	DRAWN BY	DRG No.
TMc	TAN	a210

MATERIAL NOTE:
W-SHAPES, CHANNELS: ASTM A992
ANGLES, S-SHAPES: ASTM A36
PLATE AND BAR: ASTM A36
PIPE: ASTM A53, GRADE B
HSS: ASTM A500, GRADE B

PROCESS CONTROL
PROCESS BY
FAB: _____
FIT AND WELD: _____
INSPECTION: _____
OTHER (IF NEEDED) _____
_____ : _____
_____ : _____
_____ : _____
_____ : _____
REFERENCE LATEST ERECTION DRAWINGS FOR MATERIAL & FABRICATION INFORMATION

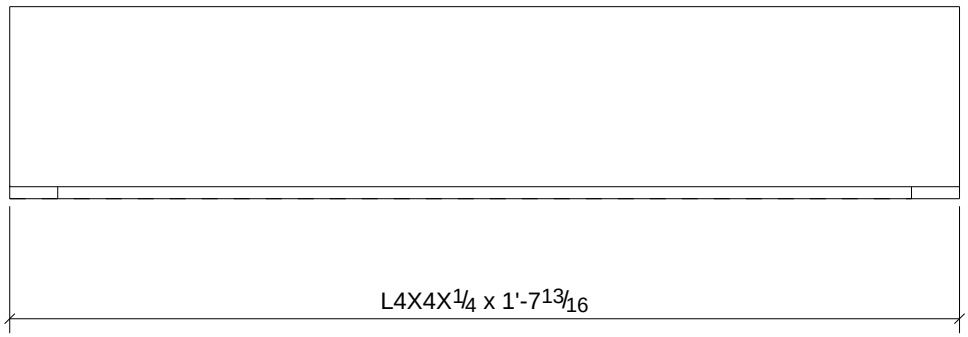

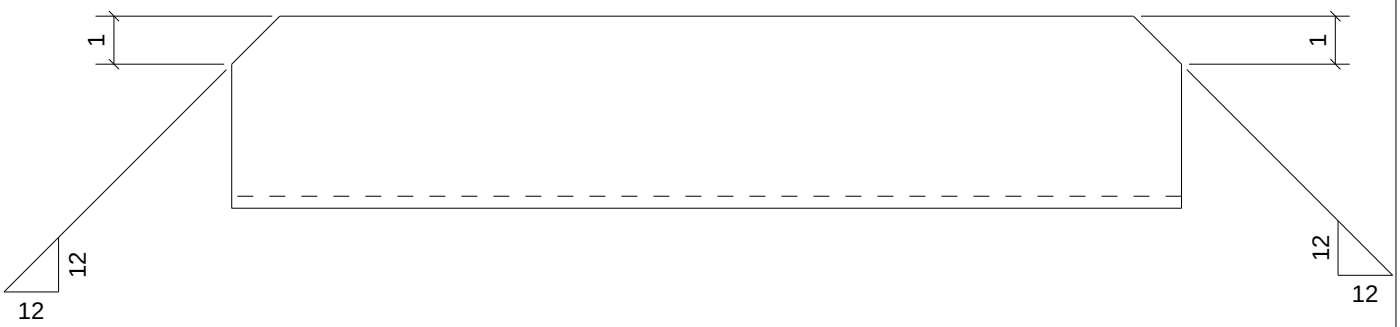

10	B1
11	B37
10	B57
10	B65
11	B100
Qty.	In Assembly

Qty.	Mark	Size	Length	Comments	Grade
52	a252	L4X4X1/4	1'-7 13/16"		A36

PROJECT NAME
OLDE ORCHARD ELEMENTARY SCHOOL

LOCATION
800 McNAUGHTEN RD. COLUMBUS, OHIO 43213

CUSTOMER
THOMAS AND MARKER CONSTRUCTION

ARCHITECT
BRAUN & STEIDL

NORTH CENTRAL FABRICATION
Mansfield, OH 44906
419-529-2744 FAX 419-529-5387 http://www.northcentralfabri

AISC CERTIFIED FABRICATOR

DESCRIPTION
ANGLE

DATE	DATE	JOB No.
05/27/2011		70234
DRAWN BY	DRAWN BY	DRG No.
TMc	TAN	a252

MATERIAL NOTE:
W-SHAPES, CHANNELS: ASTM A992
ANGLES, S-SHAPES: ASTM A36
PLATE AND BAR: ASTM A36
PIPE: ASTM A53, GRADE B
HSS: ASTM A500, GRADE B

PROCESS CONTROL
PROCESS BY
FAB: _____
FIT AND WELD: _____
INSPECTION: _____
OTHER (IF NEEDED) _____
_____ : _____
_____ : _____
_____ : _____
_____ : _____
REFERENCE LATEST ERECTION DRAWINGS FOR MATERIAL & FABRICATION INFORMATION

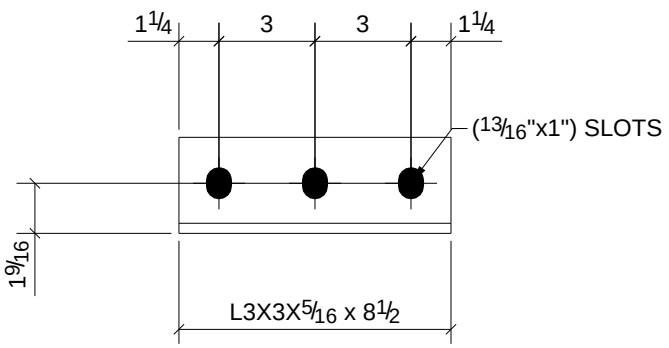

Qty.	In Assembly
4	B111

Qty.	Mark	Size	Length	Comments	Grade
4	a268	L3X3X5/16	0'-8 1/2"		A36

PROJECT NAME
OLDE ORCHARD ELEMENTARY SCHOOL

LOCATION
800 McNAUGHTEN RD. COLUMBUS, OHIO 43213

CUSTOMER
THOMAS AND MARKER CONSTRUCTION

ARCHITECT
BRAUN & STEIDL

NORTH CENTRAL FABRICATION
Mansfield, OH 44906
419-529-2744 FAX 419-529-5387 http://www.northcentralfabri

AISC CERTIFIED FABRICATOR

DESCRIPTION
ANGLE

DATE	DATE	JOB No.
05/24/2011		70234
DRAWN BY	DRAWN BY	DRG No.
TMc	TAN	a268

MATERIAL NOTE:
W-SHAPES, CHANNELS: ASTM A992
ANGLES, S-SHAPES: ASTM A36
PLATE AND BAR: ASTM A36
PIPE: ASTM A53, GRADE B
HSS: ASTM A500, GRADE B

PROCESS CONTROL
PROCESS BY
FAB: _____
FIT AND WELD: _____
INSPECTION: _____
OTHER (IF NEEDED) _____
_____ : _____
_____ : _____
_____ : _____
_____ : _____
REFERENCE LATEST ERECTION DRAWINGS FOR MATERIAL & FABRICATION INFORMATION

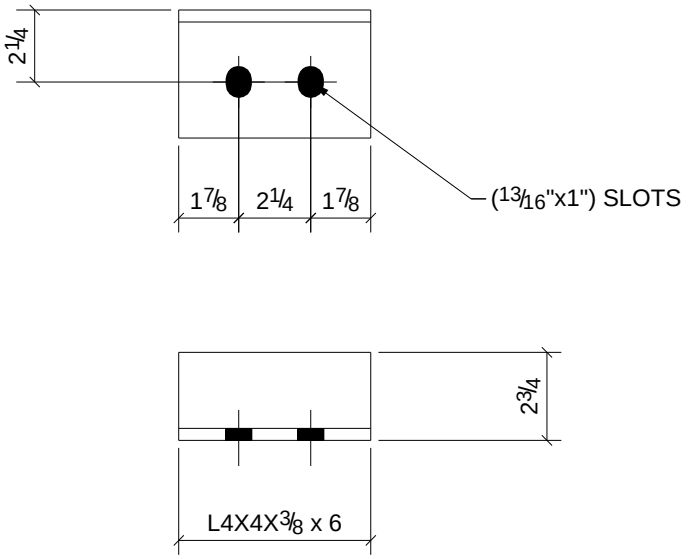

Qty.	In Assembly
2	C30

Qty.	Mark	Size	Length	Comments	Grade
2	a299	L4X4X3/8	0'-6"		A36

PROJECT NAME
OLDE ORCHARD ELEMENTARY SCHOOL

LOCATION
800 McNAUGHTEN RD. COLUMBUS, OHIO 43213

CUSTOMER
THOMAS AND MARKER CONSTRUCTION

ARCHITECT
BRAUN & STEIDL

NORTH CENTRAL FABRICATION
Mansfield, OH 44906
419-529-2744 FAX 419-529-5387 http://www.northcentralfabri

AISC CERTIFIED FABRICATOR

DESCRIPTION
ANGLE

DATE	DATE	JOB No.
05/27/2011		70234
DRAWN BY	DRAWN BY	DRG No.
TMc	TAN	a299

MATERIAL NOTE:
W-SHAPES, CHANNELS: ASTM A992
ANGLES, S-SHAPES: ASTM A36
PLATE AND BAR: ASTM A36
PIPE: ASTM A53, GRADE B
HSS: ASTM A500, GRADE B

PROCESS CONTROL
PROCESS BY
FAB: _____
FIT AND WELD: _____
INSPECTION: _____
OTHER (IF NEEDED) _____
_____ : _____
_____ : _____
_____ : _____
_____ : _____
REFERENCE LATEST ERECTION DRAWINGS FOR MATERIAL & FABRICATION INFORMATION

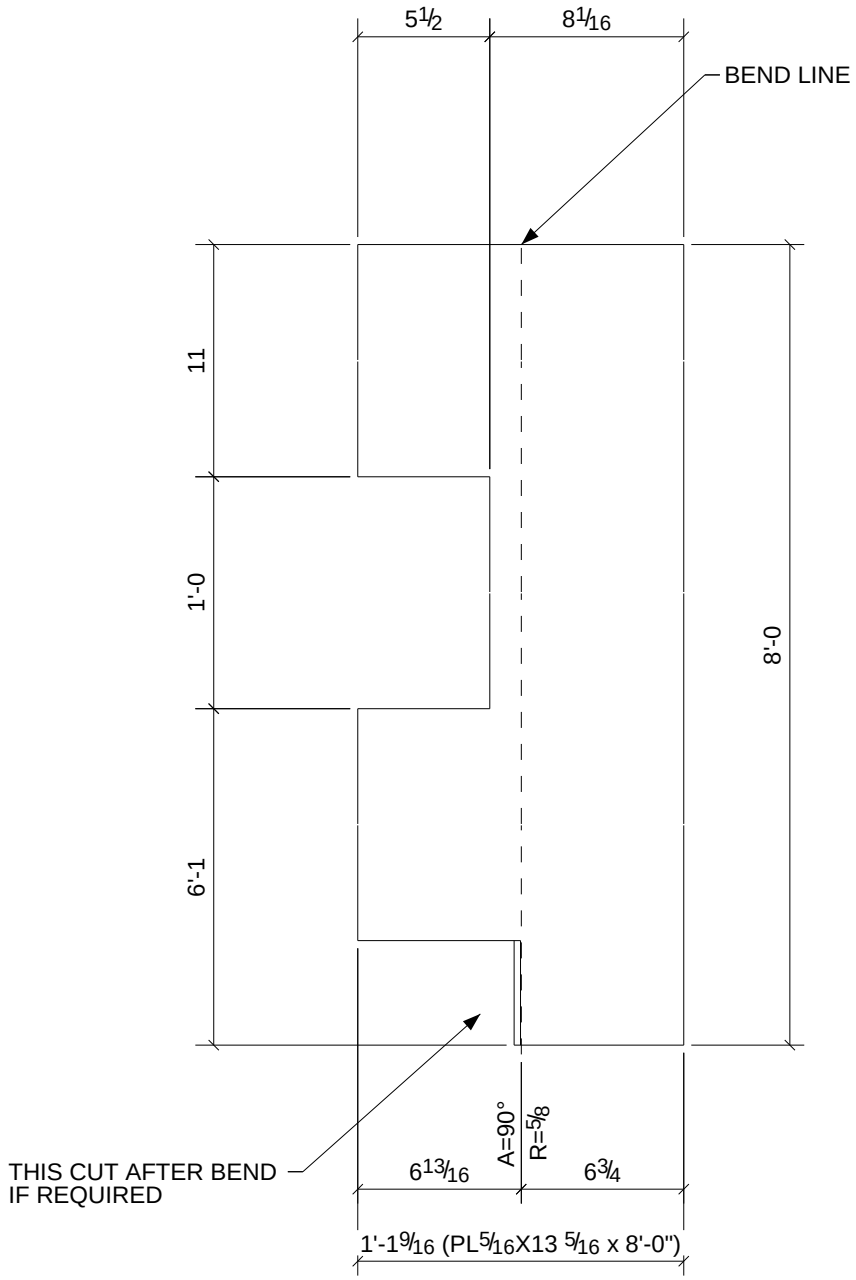

1	M1
Qty.	In Assembly

Qty.	Mark	Size	Length	Comments	Grade
1	M1	PL5/16"X13 5/16"	8'-0"		A36

PROJECT NAME
OLDE ORCHARD ELEMENTARY SCHOOL

LOCATION
800 McNAUGHTEN RD. COLUMBUS, OHIO 43213

CUSTOMER
THOMAS AND MARKER CONSTRUCTION

ARCHITECT
BRAUN & STEIDL

NORTH CENTRAL FABRICATION
Mansfield, OH 44906
419-529-2744 FAX 419-529-5387 http://www.northcentralfabri

AISC CERTIFIED FABRICATOR

DESCRIPTION	DATE	DATE	JOB No.
BENT_PLATE	05/23/2011		70234
	DRAWN BY TMc	DRAWN BY TAN	DRG No. M1

MATERIAL NOTE:
W-SHAPES, CHANNELS: ASTM A992
ANGLES, S-SHAPES: ASTM A36
PLATE AND BAR: ASTM A36
PIPE: ASTM A53, GRADE B
HSS: ASTM A500, GRADE B

PROCESS CONTROL
PROCESS BY
FAB: _____
FIT AND WELD: _____
INSPECTION: _____
OTHER (IF NEEDED) _____
_____ : _____
_____ : _____
_____ : _____
_____ : _____
REFERENCE LATEST ERECTION DRAWINGS FOR MATERIAL & FABRICATION INFORMATION

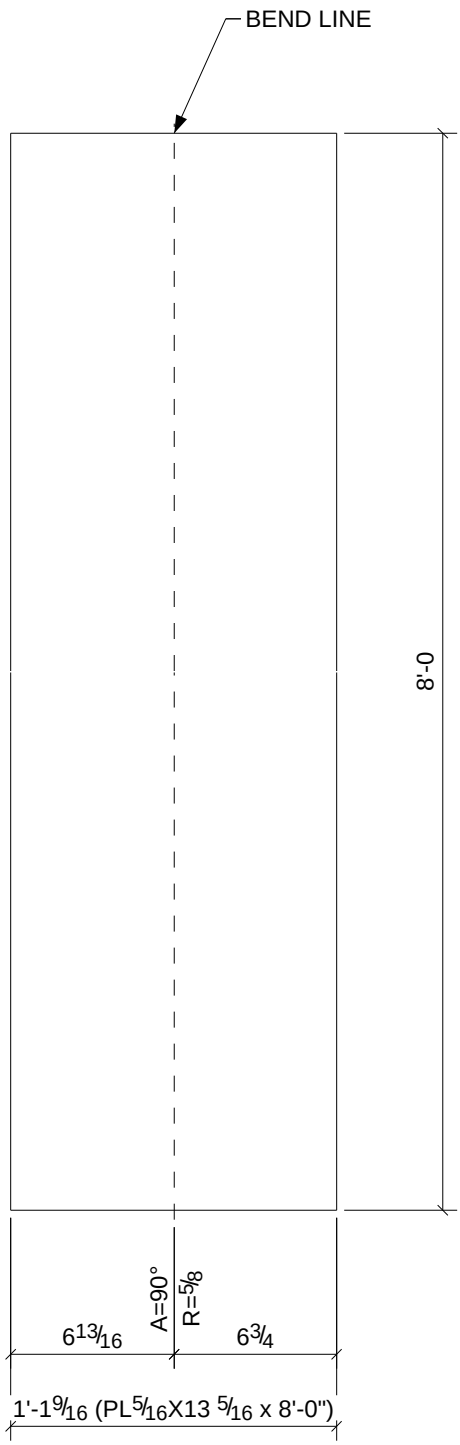

2	M2
Qty.	In Assembly

Qty.	Mark	Size	Length	Comments	Grade
2	M2	PL5/16"X13 5/16"	8'-0"		A36

PROJECT NAME
OLDE ORCHARD ELEMENTARY SCHOOL

LOCATION
800 McNAUGHTEN RD. COLUMBUS, OHIO 43213

CUSTOMER
THOMAS AND MARKER CONSTRUCTION

ARCHITECT
BRAUN & STEIDL

NORTH CENTRAL FABRICATION
Mansfield, OH 44906
419-529-2744 FAX 419-529-5387 http://www.northcentralfabri

AISC CERTIFIED FABRICATOR

DESCRIPTION	DATE	DATE	JOB No.
BENT_PLATE	05/23/2011		70234
	DRAWN BY TMc	DRAWN BY TAN	DRG No. M2

MATERIAL NOTE:
W-SHAPES, CHANNELS: ASTM A992
ANGLES, S-SHAPES: ASTM A36
PLATE AND BAR: ASTM A36
PIPE: ASTM A53, GRADE B
HSS: ASTM A500, GRADE B

PROCESS CONTROL
PROCESS BY
FAB: _____
FIT AND WELD: _____
INSPECTION: _____
OTHER (IF NEEDED) _____
_____ : _____
_____ : _____
_____ : _____
_____ : _____
REFERENCE LATEST ERECTION DRAWINGS FOR MATERIAL & FABRICATION INFORMATION

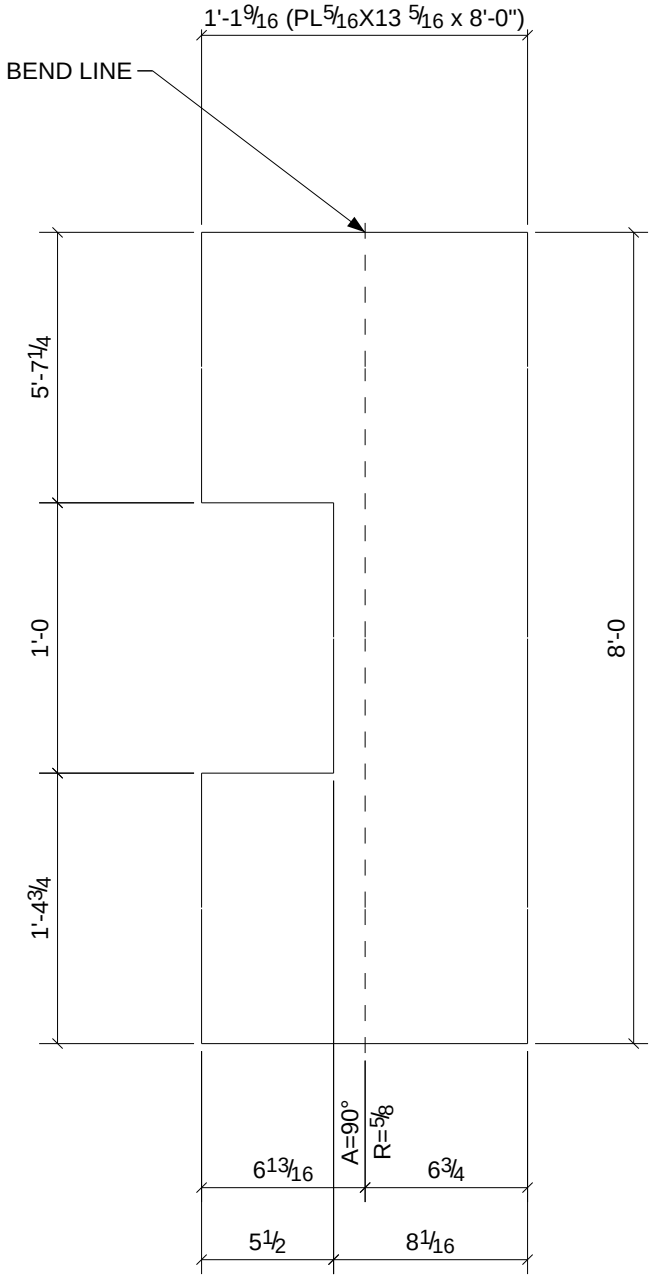

1	M3
Qty.	In Assembly

Qty.	Mark	Size	Length	Comments	Grade
1	M3	PL5/16"X13 5/16"	8'-0"		A36

PROJECT NAME
OLDE ORCHARD ELEMENTARY SCHOOL

LOCATION
800 McNAUGHTEN RD. COLUMBUS, OHIO 43213

CUSTOMER
THOMAS AND MARKER CONSTRUCTION

ARCHITECT
BRAUN & STEIDL

NORTH CENTRAL FABRICATION
Mansfield, OH 44906
419-529-2744 FAX 419-529-5387 http://www.northcentralfabri

AISC CERTIFIED FABRICATOR

DESCRIPTION	DATE	DATE	JOB No.
BENT_PLATE	05/23/2011		70234
	DRAWN BY TMc	DRAWN BY TAN	DRG No. M3

MATERIAL NOTE:
W-SHAPES, CHANNELS: ASTM A992
ANGLES, S-SHAPES: ASTM A36
PLATE AND BAR: ASTM A36
PIPE: ASTM A53, GRADE B
HSS: ASTM A500, GRADE B

PROCESS CONTROL
PROCESS BY
FAB: _____
FIT AND WELD: _____
INSPECTION: _____
OTHER (IF NEEDED) _____
_____ : _____
_____ : _____
_____ : _____
_____ : _____
REFERENCE LATEST ERECTION DRAWINGS FOR MATERIAL & FABRICATION INFORMATION

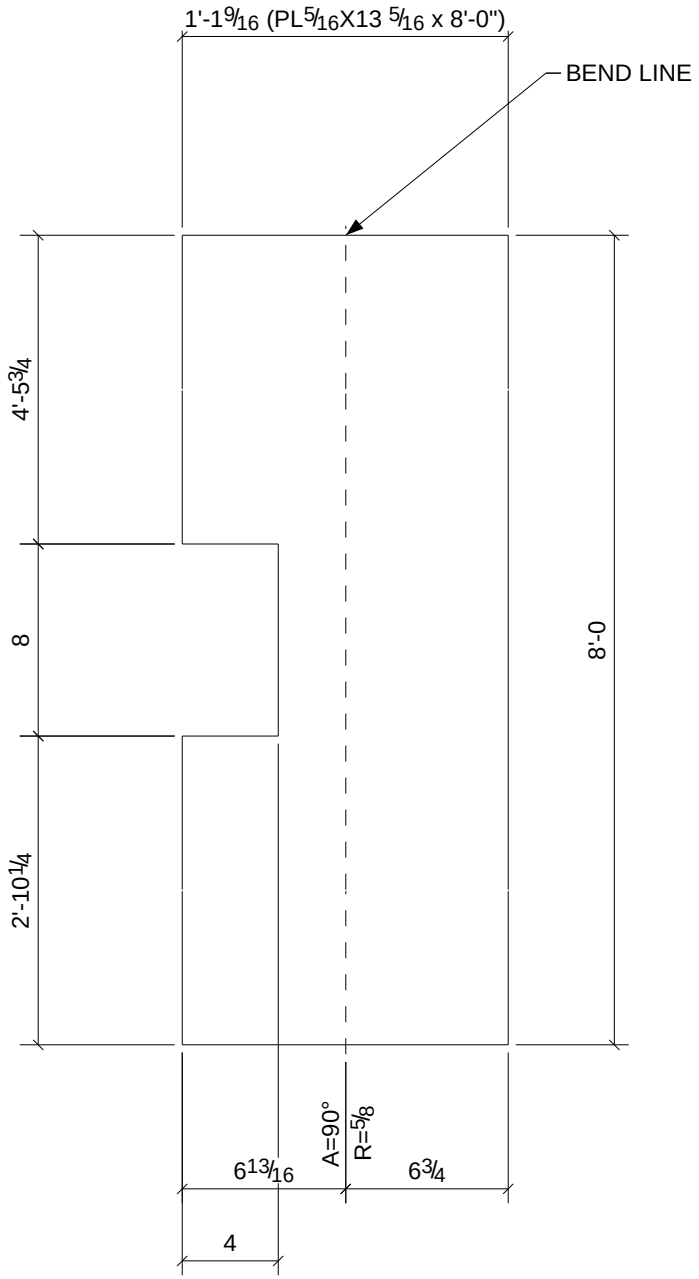

				1	M8
				Qty.	In Assembly
1	M8	PL5/16"X13 5/16"	8'-0"		A36
Qty.	Mark	Size	Length	Comments	Grade

PROJECT NAME
OLDE ORCHARD ELEMENTARY SCHOOL

LOCATION
800 McNAUGHTEN RD. COLUMBUS, OHIO 43213

CUSTOMER
THOMAS AND MARKER CONSTRUCTION

ARCHITECT
BRAUN & STEIDL

NORTH CENTRAL FABRICATION
Mansfield, OH 44906
419-529-2744 FAX 419-529-5387 http://www.northcentralfabri

AISC CERTIFIED FABRICATOR

DESCRIPTION	DATE	DATE	JOB No.
BENT_PLATE	05/23/2011		70234
	DRAWN BY TMc	DRAWN BY TAN	DRG No. M8

MATERIAL NOTE:
W-SHAPES, CHANNELS: ASTM A992
ANGLES, S-SHAPES: ASTM A36
PLATE AND BAR: ASTM A36
PIPE: ASTM A53, GRADE B
HSS: ASTM A500, GRADE B

PROCESS CONTROL
PROCESS BY
FAB: _____
FIT AND WELD: _____
INSPECTION: _____
OTHER (IF NEEDED) _____
_____ : _____
_____ : _____
_____ : _____
_____ : _____
REFERENCE LATEST ERECTION DRAWINGS FOR MATERIAL & FABRICATION INFORMATION

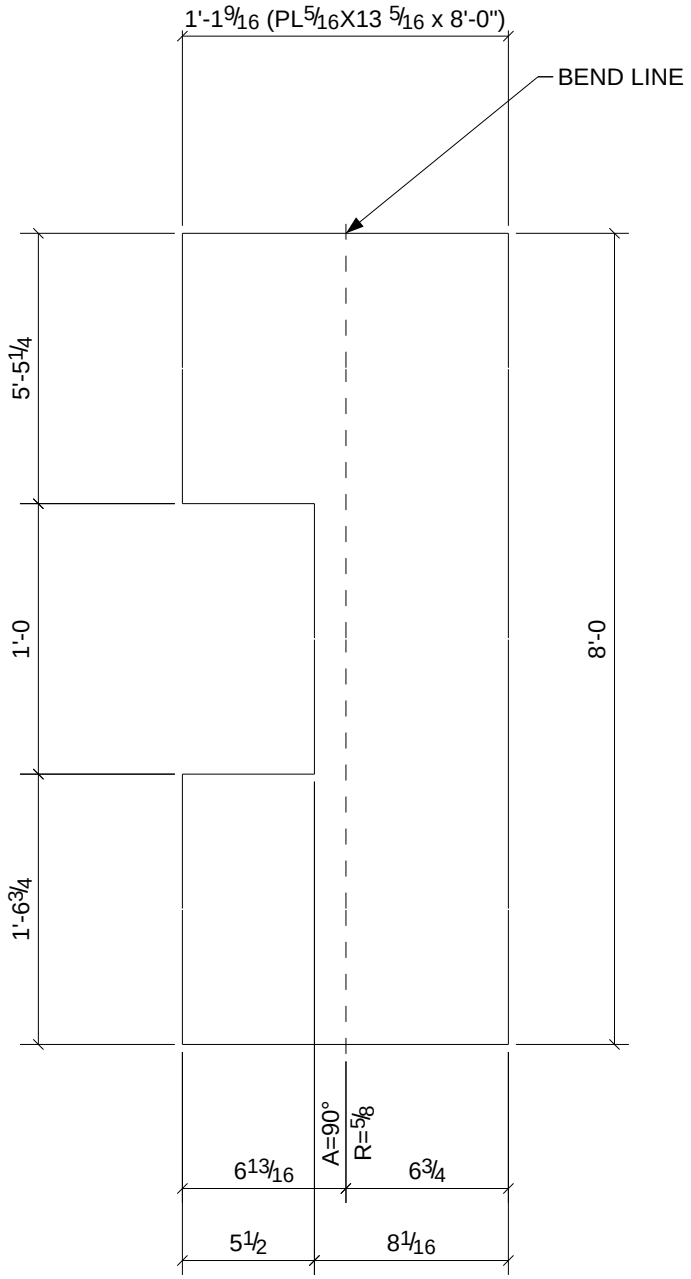

1	M9
Qty.	In Assembly

Qty.	Mark	Size	Length	Comments	Grade
1	M9	PL5/16"X13 5/16"	8'-0"		A36

PROJECT NAME
OLDE ORCHARD ELEMENTARY SCHOOL

LOCATION
800 McNAUGHTEN RD. COLUMBUS, OHIO 43213

CUSTOMER
THOMAS AND MARKER CONSTRUCTION

ARCHITECT
BRAUN & STEIDL

NORTH CENTRAL FABRICATION
Mansfield, OH 44906
419-529-2744 FAX 419-529-5387 http://www.northcentralfabri

AISC CERTIFIED FABRICATOR

DESCRIPTION	DATE	DATE	JOB No.
BENT_PLATE	05/23/2011		70234
	DRAWN BY TMc	DRAWN BY TAN	DRG No. M9

MATERIAL NOTE:
W-SHAPES, CHANNELS: ASTM A992
ANGLES, S-SHAPES: ASTM A36
PLATE AND BAR: ASTM A36
PIPE: ASTM A53, GRADE B
HSS: ASTM A500, GRADE B

PROCESS CONTROL
PROCESS BY
FAB: _____
FIT AND WELD: _____
INSPECTION: _____
OTHER (IF NEEDED) _____
_____ : _____
_____ : _____
_____ : _____
_____ : _____
REFERENCE LATEST ERECTION DRAWINGS FOR MATERIAL & FABRICATION INFORMATION

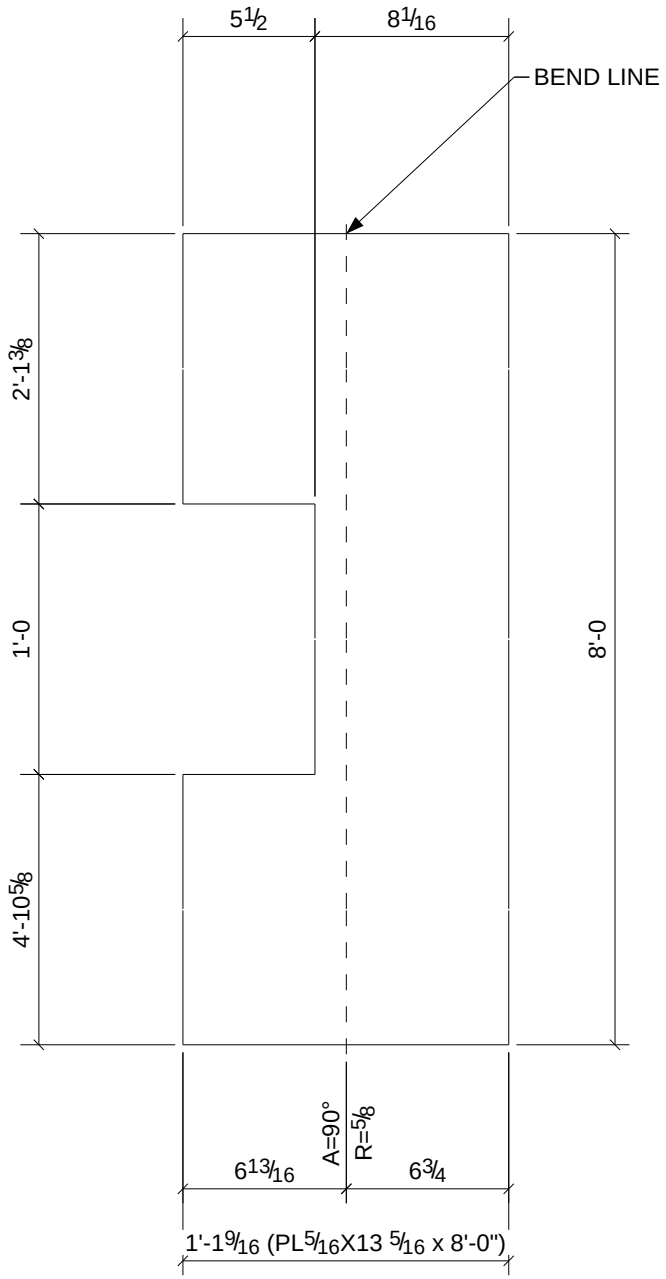

1	M25
Qty.	In Assembly

Qty.	Mark	Size	Length	Comments	Grade
1	M25	PL5/16"X13 5/16"	8'-0"		A36

PROJECT NAME
OLDE ORCHARD ELEMENTARY SCHOOL

LOCATION
800 McNAUGHTEN RD. COLUMBUS, OHIO 43213

CUSTOMER
THOMAS AND MARKER CONSTRUCTION

ARCHITECT
BRAUN & STEIDL

NORTH CENTRAL FABRICATION
Mansfield, OH 44906
419-529-2744 FAX 419-529-5387 http://www.northcentralfabri

AISC CERTIFIED FABRICATOR

DESCRIPTION	DATE	DATE	JOB No.
BENT_PLATE	05/23/2011		70234
	DRAWN BY TMc	DRAWN BY TAN	DRG No. M25

MATERIAL NOTE:
W-SHAPES, CHANNELS: ASTM A992
ANGLES, S-SHAPES: ASTM A36
PLATE AND BAR: ASTM A36
PIPE: ASTM A53, GRADE B
HSS: ASTM A500, GRADE B

PROCESS CONTROL
PROCESS BY
FAB: _____
FIT AND WELD: _____
INSPECTION: _____
OTHER (IF NEEDED)
_____ : _____
_____ : _____
_____ : _____
_____ : _____
REFERENCE LATEST ERECTION DRAWINGS FOR MATERIAL & FABRICATION INFORMATION

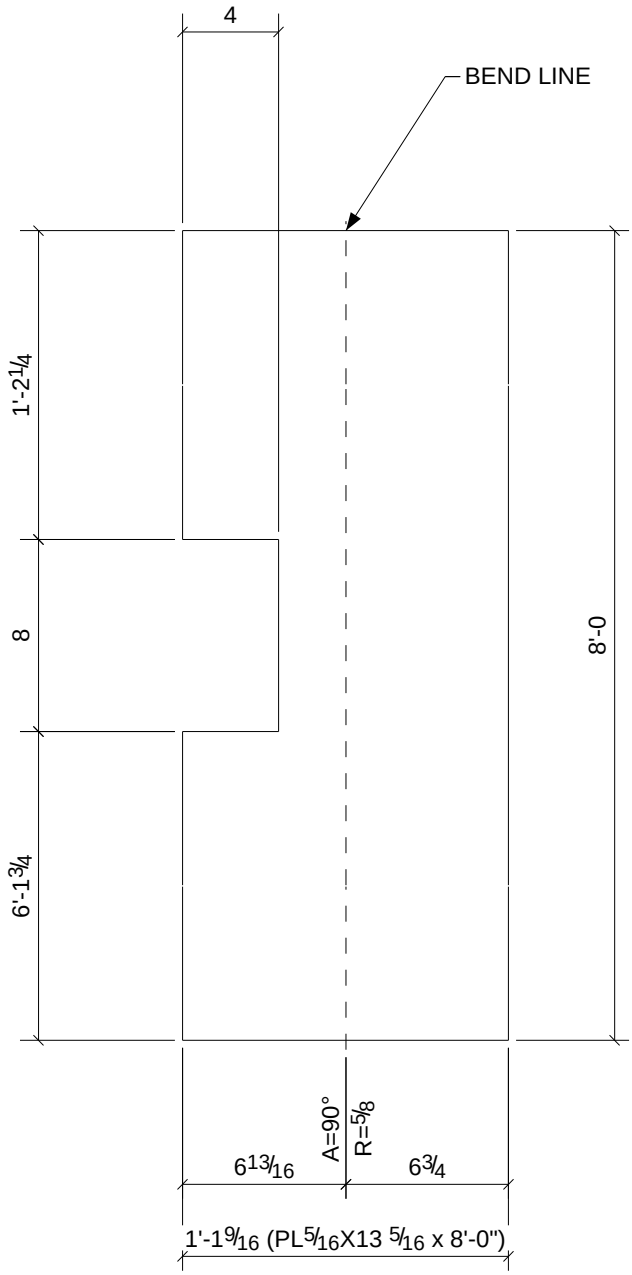

1	M26
Qty.	In Assembly

Qty.	Mark	Size	Length	Comments	Grade
1	M26	PL5/16"X13 5/16"	8'-0"		A36

PROJECT NAME
OLDE ORCHARD ELEMENTARY SCHOOL

LOCATION
800 McNAUGHTEN RD. COLUMBUS, OHIO 43213

CUSTOMER
THOMAS AND MARKER CONSTRUCTION

ARCHITECT
BRAUN & STEIDL

NORTH CENTRAL FABRICATION
Mansfield, OH 44906
419-529-2744 FAX 419-529-5387 http://www.northcentralfabri

AISC CERTIFIED FABRICATOR

DESCRIPTION	DATE	DATE	JOB No.
BENT_PLATE	05/23/2011		70234
	DRAWN BY TMc	DRAWN BY TAN	DRG No. M26

MATERIAL NOTE:
W-SHAPES, CHANNELS: ASTM A992
ANGLES, S-SHAPES: ASTM A36
PLATE AND BAR: ASTM A36
PIPE: ASTM A53, GRADE B
HSS: ASTM A500, GRADE B

PROCESS CONTROL
PROCESS BY
FAB: _____
FIT AND WELD: _____
INSPECTION: _____
OTHER (IF NEEDED) _____
_____ : _____
_____ : _____
_____ : _____
_____ : _____
REFERENCE LATEST ERECTION DRAWINGS FOR MATERIAL & FABRICATION INFORMATION

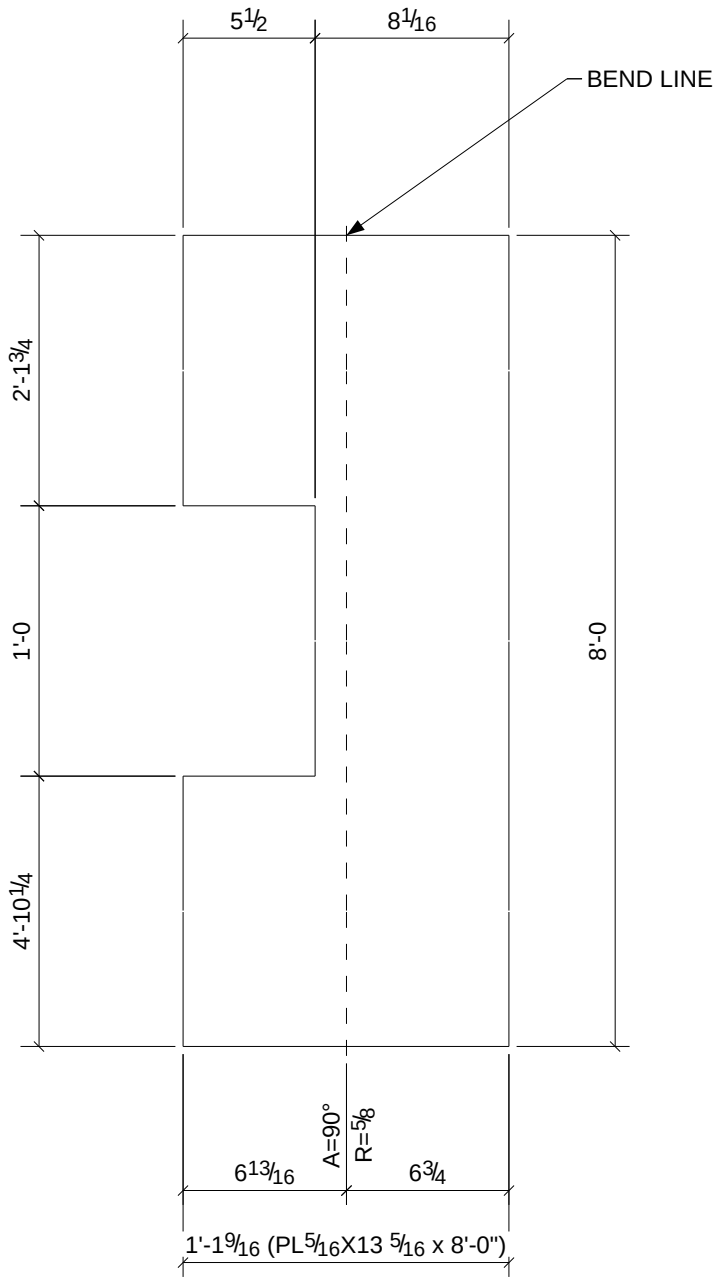

1	M28
Qty.	In Assembly

Qty.	Mark	Size	Length	Comments	Grade
1	M28	PL5/16"X13 5/16"	8'-0"		A36

PROJECT NAME
OLDE ORCHARD ELEMENTARY SCHOOL

LOCATION
800 McNAUGHTEN RD. COLUMBUS, OHIO 43213

CUSTOMER
THOMAS AND MARKER CONSTRUCTION

ARCHITECT
BRAUN & STEIDL

NORTH CENTRAL FABRICATION
Mansfield, OH 44906
419-529-2744 FAX 419-529-5387 http://www.northcentralfabri

AISC CERTIFIED FABRICATOR

DESCRIPTION	DATE	DATE	JOB No.
BENT_PLATE	05/23/2011		70234
	DRAWN BY TMc	DRAWN BY TAN	DRG No. M28

MATERIAL NOTE:
W-SHAPES, CHANNELS: ASTM A992
ANGLES, S-SHAPES: ASTM A36
PLATE AND BAR: ASTM A36
PIPE: ASTM A53, GRADE B
HSS: ASTM A500, GRADE B

PROCESS CONTROL
PROCESS BY
FAB: _____
FIT AND WELD: _____
INSPECTION: _____
OTHER (IF NEEDED) _____
_____ : _____
_____ : _____
_____ : _____
_____ : _____
REFERENCE LATEST ERECTION DRAWINGS FOR MATERIAL & FABRICATION INFORMATION

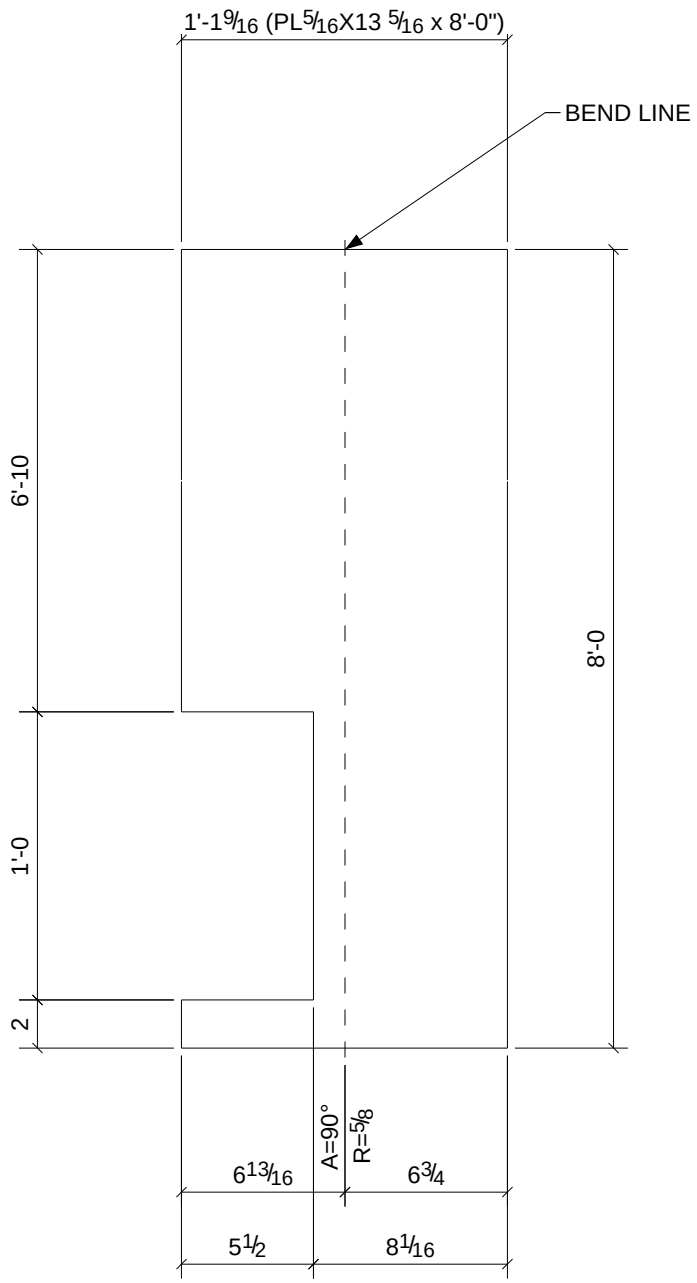

Qty.	In Assembly
1	M29

Qty.	Mark	Size	Length	Comments	Grade
1	M29	PL5/16"X13 5/16"	8'-0"		A36

PROJECT NAME
OLDE ORCHARD ELEMENTARY SCHOOL

LOCATION
800 McNAUGHTEN RD. COLUMBUS, OHIO 43213

CUSTOMER
THOMAS AND MARKER CONSTRUCTION

ARCHITECT
BRAUN & STEIDL

NORTH CENTRAL FABRICATION
Mansfield, OH 44906
419-529-2744 FAX 419-529-5387 http://www.northcentralfabri

AISC CERTIFIED FABRICATOR

DESCRIPTION	DATE	DATE	JOB No.
BENT_PLATE	05/23/2011		70234
	DRAWN BY TMc	DRAWN BY TAN	DRG No. M29

MATERIAL NOTE:
W-SHAPES, CHANNELS: ASTM A992
ANGLES, S-SHAPES: ASTM A36
PLATE AND BAR: ASTM A36
PIPE: ASTM A53, GRADE B
HSS: ASTM A500, GRADE B

PROCESS CONTROL
PROCESS BY
FAB: _____
FIT AND WELD: _____
INSPECTION: _____
OTHER (IF NEEDED) _____
_____ : _____
_____ : _____
_____ : _____
_____ : _____
REFERENCE LATEST ERECTION DRAWINGS FOR MATERIAL & FABRICATION INFORMATION

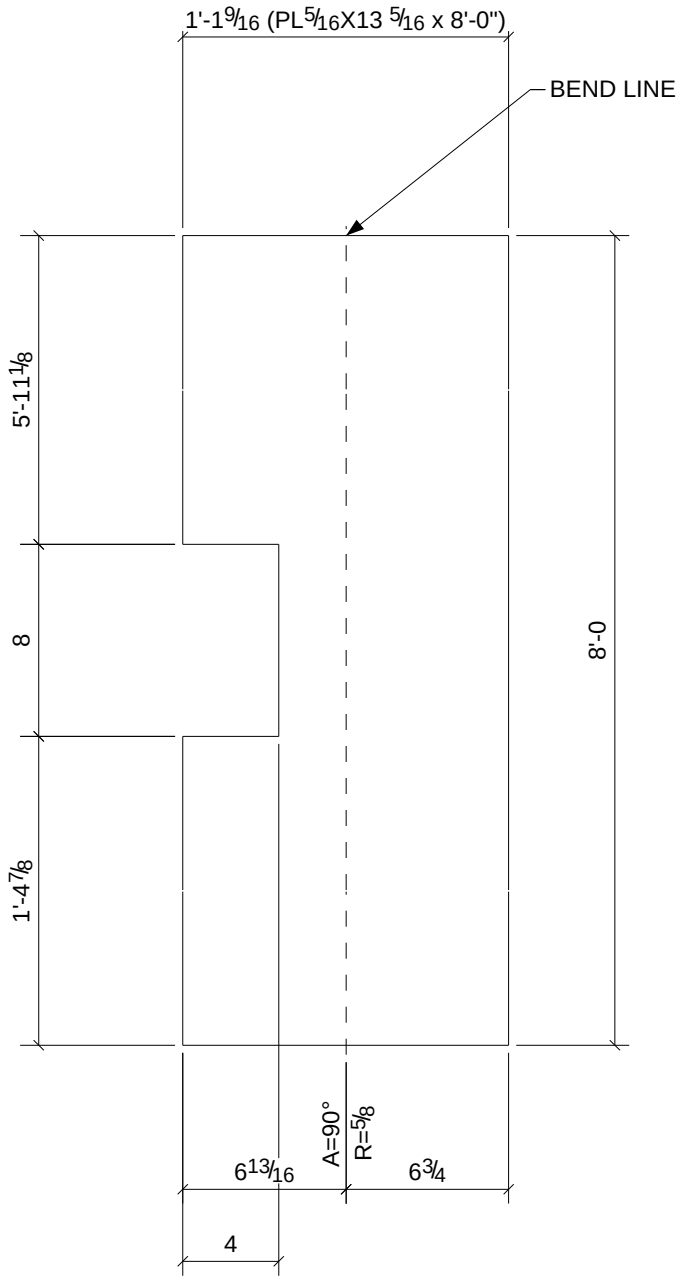

1	M32
Qty.	In Assembly

Qty.	Mark	Size	Length	Comments	Grade
1	M32	PL5/16"X13 5/16"	8'-0"		A36

PROJECT NAME
OLDE ORCHARD ELEMENTARY SCHOOL

LOCATION
800 McNAUGHTEN RD. COLUMBUS, OHIO 43213

CUSTOMER
THOMAS AND MARKER CONSTRUCTION

ARCHITECT
BRAUN & STEIDL

NORTH CENTRAL FABRICATION
Mansfield, OH 44906
419-529-2744 FAX 419-529-5387 http://www.northcentralfabri

AISC CERTIFIED FABRICATOR

DESCRIPTION	DATE	DATE	JOB No.
BENT_PLATE	05/23/2011		70234
	DRAWN BY TMc	DRAWN BY TAN	DRG No. M32

MATERIAL NOTE:
W-SHAPES, CHANNELS: ASTM A992
ANGLES, S-SHAPES: ASTM A36
PLATE AND BAR: ASTM A36
PIPE: ASTM A53, GRADE B
HSS: ASTM A500, GRADE B

PROCESS CONTROL
PROCESS BY
FAB: _____
FIT AND WELD: _____
INSPECTION: _____
OTHER (IF NEEDED) _____
_____ : _____
_____ : _____
_____ : _____
_____ : _____
REFERENCE LATEST ERECTION DRAWINGS FOR MATERIAL & FABRICATION INFORMATION

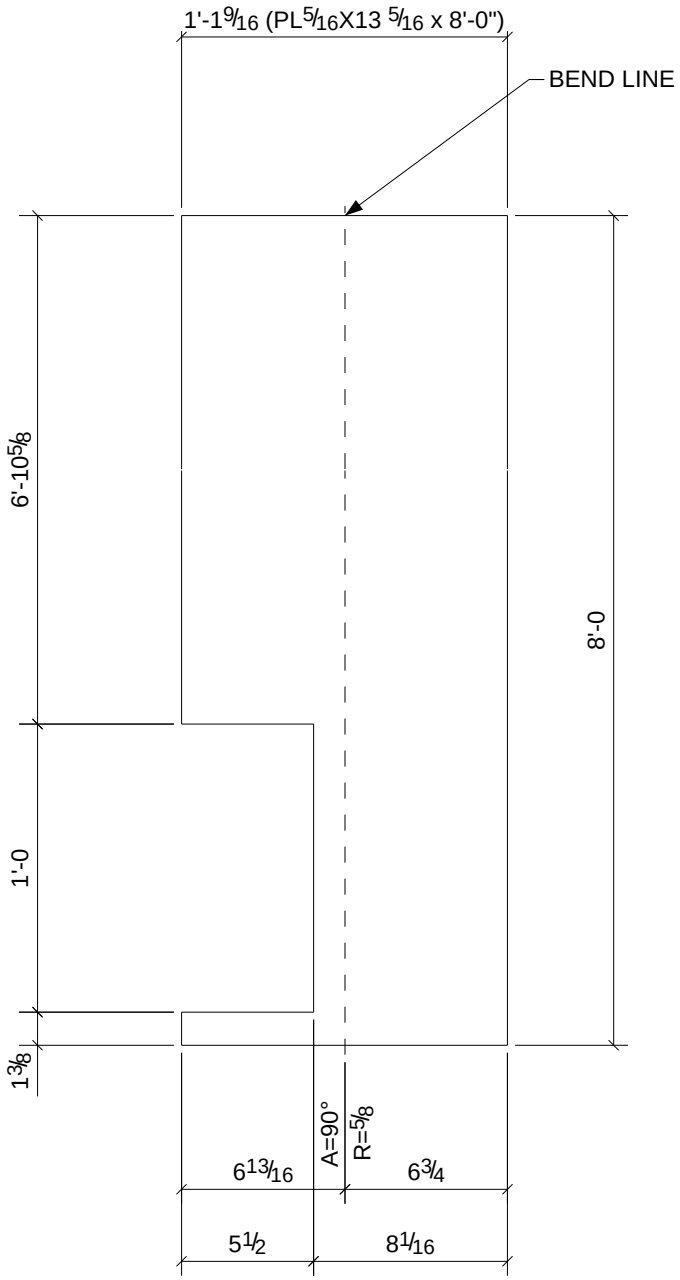

Qty.	In Assembly
1	M34

Qty.	Mark	Size	Length	Comments	Grade
1	M34	PL5/16"X13 5/16"	8'-0"		A36

PROJECT NAME
OLDE ORCHARD ELEMENTARY SCHOOL

LOCATION
800 McNAUGHTEN RD. COLUMBUS, OHIO 43213

CUSTOMER
THOMAS AND MARKER CONSTRUCTION

ARCHITECT
BRAUN & STEIDL

NORTH CENTRAL FABRICATION
Mansfield, OH 44906
419-529-2744 FAX 419-529-5387 http://www.northcentralfabri

AISC CERTIFIED FABRICATOR

DESCRIPTION	DATE	DATE	JOB No.
BENT_PLATE	05/23/2011		70234
	DRAWN BY TMc	DRAWN BY TAN	DRG No. M34

MATERIAL NOTE:
W-SHAPES, CHANNELS: ASTM A992
ANGLES, S-SHAPES: ASTM A36
PLATE AND BAR: ASTM A36
PIPE: ASTM A53, GRADE B
HSS: ASTM A500, GRADE B

PROCESS CONTROL
PROCESS BY
FAB: _____
FIT AND WELD: _____
INSPECTION: _____
OTHER (IF NEEDED) _____
_____ : _____
_____ : _____
_____ : _____
_____ : _____
REFERENCE LATEST ERECTION DRAWINGS FOR MATERIAL & FABRICATION INFORMATION

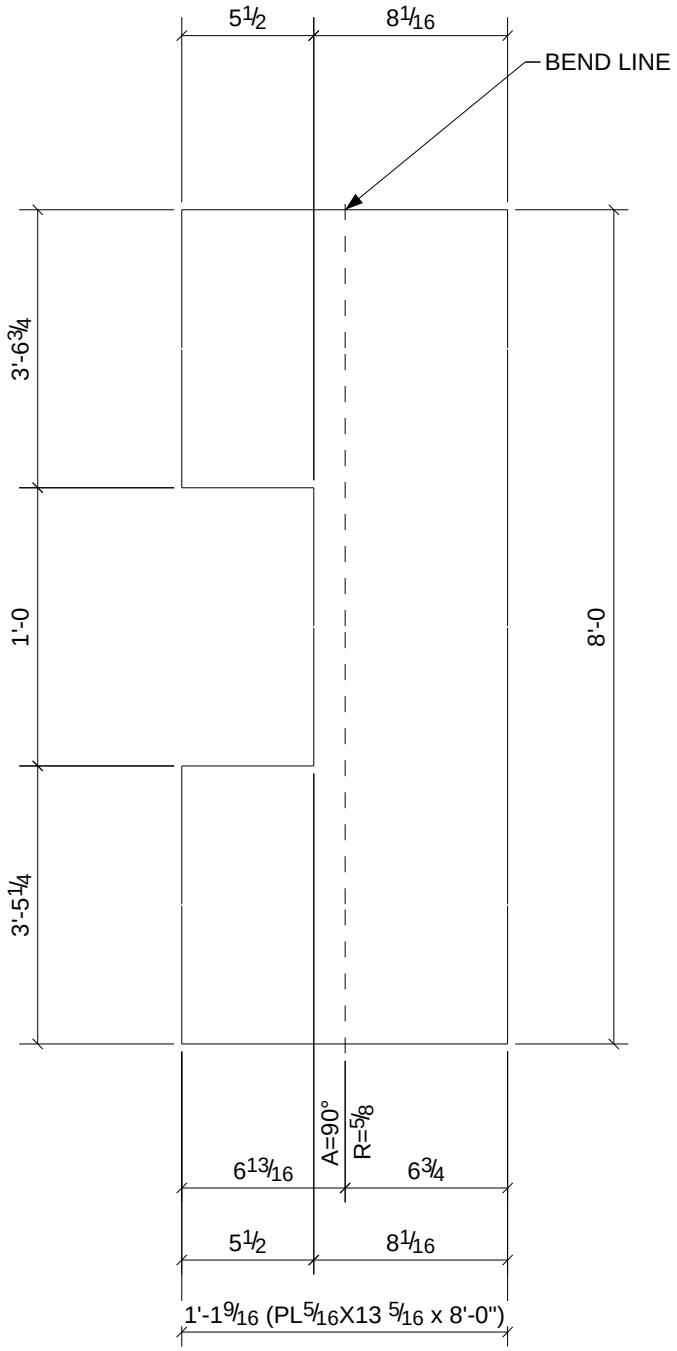

Qty.	Mark
1	M35

Qty.	Mark	Size	Length	Comments	Grade
1	M35	PL5/16"X13 5/16"	8'-0"		A36

PROJECT NAME
OLDE ORCHARD ELEMENTARY SCHOOL

LOCATION
800 McNAUGHTEN RD. COLUMBUS, OHIO 43213

CUSTOMER
THOMAS AND MARKER CONSTRUCTION

ARCHITECT
BRAUN & STEIDL

NORTH CENTRAL FABRICATION
Mansfield, OH 44906
419-529-2744 FAX 419-529-5387 http://www.northcentralfabri

AISC CERTIFIED FABRICATOR

DESCRIPTION
BENT_PLATE

DATE	DATE	JOB No.
05/23/2011		70234
DRAWN BY	DRAWN BY	DRG No.
TMc	TAN	M35

MATERIAL NOTE:
W-SHAPES, CHANNELS: ASTM A992
ANGLES, S-SHAPES: ASTM A36
PLATE AND BAR: ASTM A36
PIPE: ASTM A53, GRADE B
HSS: ASTM A500, GRADE B

PROCESS CONTROL
PROCESS BY
FAB: _____
FIT AND WELD: _____
INSPECTION: _____
OTHER (IF NEEDED) _____
_____ : _____
_____ : _____
_____ : _____
_____ : _____
REFERENCE LATEST ERECTION DRAWINGS FOR MATERIAL & FABRICATION INFORMATION

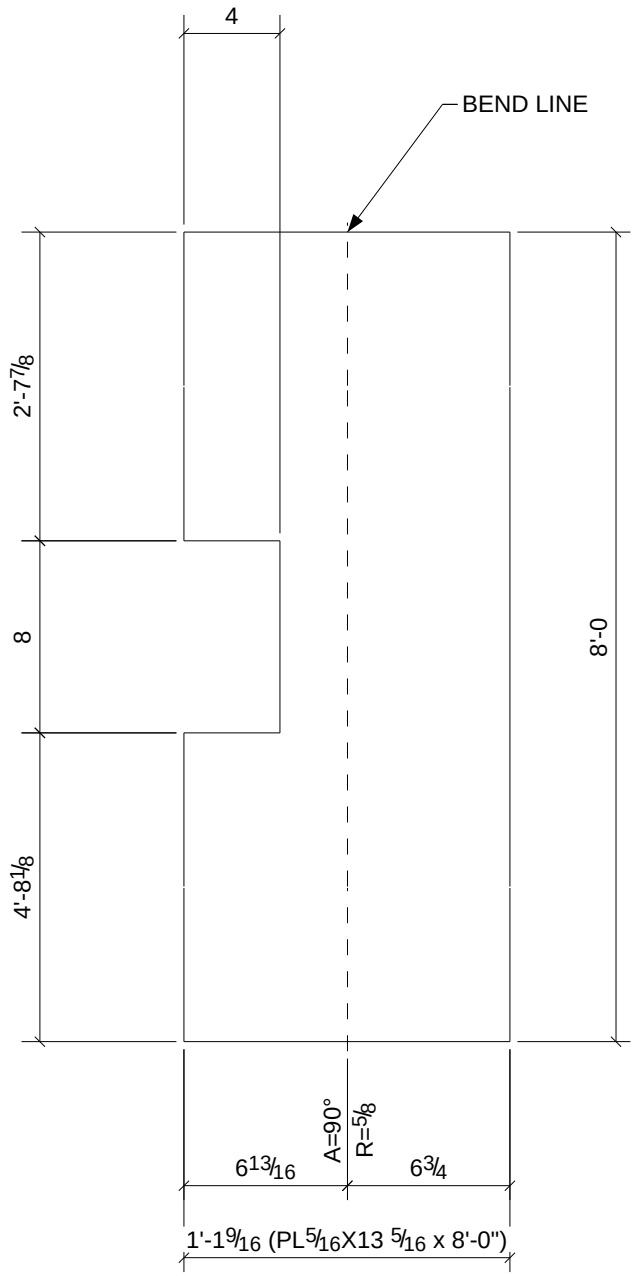

1	M39
Qty.	In Assembly

Qty.	Mark	Size	Length	Comments	Grade
1	M39	PL5/16"X13 5/16"	8'-0"		A36

PROJECT NAME
OLDE ORCHARD ELEMENTARY SCHOOL

LOCATION
800 McNAUGHTEN RD. COLUMBUS, OHIO 43213

CUSTOMER
THOMAS AND MARKER CONSTRUCTION

ARCHITECT
BRAUN & STEIDL

NORTH CENTRAL FABRICATION
Mansfield, OH 44906
419-529-2744 FAX 419-529-5387 http://www.northcentralfabri

AISC CERTIFIED FABRICATOR

DESCRIPTION	DATE	DATE	JOB No.
BENT_PLATE	05/23/2011		70234
	DRAWN BY TMc	DRAWN BY TAN	DRG No. M39

MATERIAL NOTE:
W-SHAPES, CHANNELS: ASTM A992
ANGLES, S-SHAPES: ASTM A36
PLATE AND BAR: ASTM A36
PIPE: ASTM A53, GRADE B
HSS: ASTM A500, GRADE B

PROCESS CONTROL
PROCESS BY
FAB: _____
FIT AND WELD: _____
INSPECTION: _____
OTHER (IF NEEDED) _____
_____ : _____
_____ : _____
_____ : _____
_____ : _____
REFERENCE LATEST ERECTION DRAWINGS FOR MATERIAL & FABRICATION INFORMATION

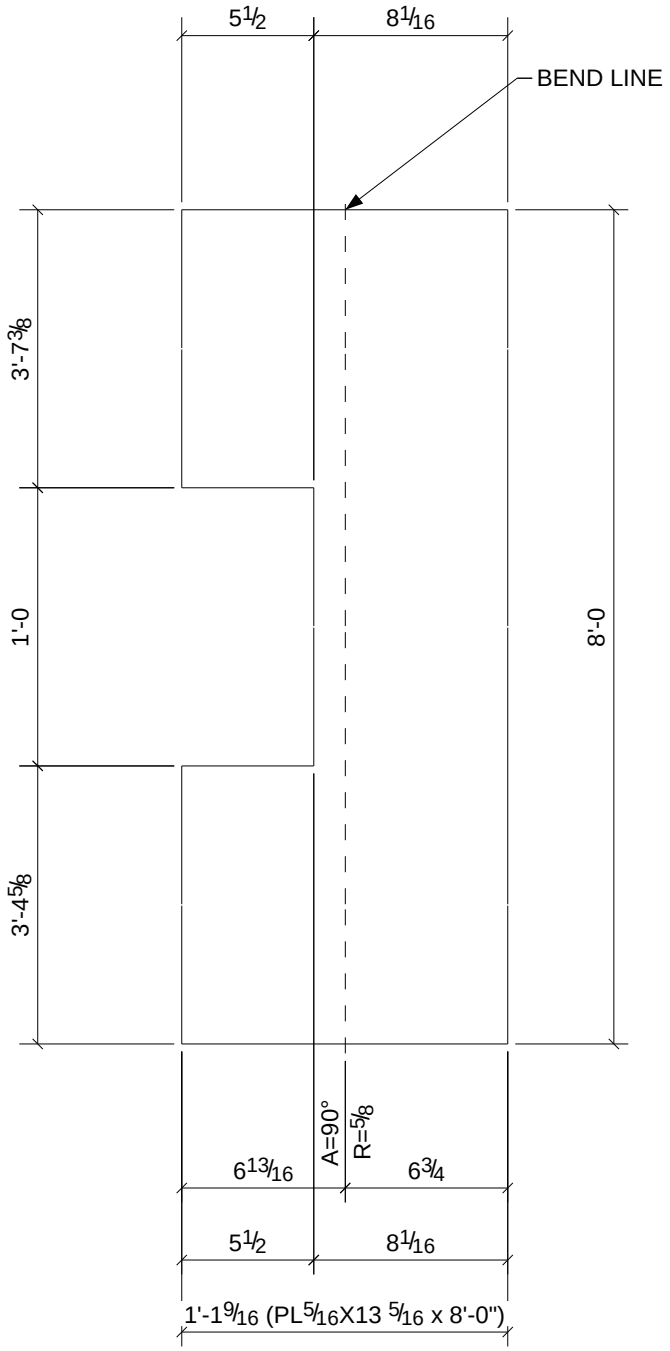

Qty.	Mark	Size	Length	Comments	Grade
1	M40	PL5/16"X13 5/16"	8'-0"		A36

Qty.	In Assembly
1	M40

PROJECT NAME
OLDE ORCHARD ELEMENTARY SCHOOL

LOCATION
800 McNAUGHTEN RD. COLUMBUS, OHIO 43213

CUSTOMER
THOMAS AND MARKER CONSTRUCTION

ARCHITECT
BRAUN & STEIDL

NORTH CENTRAL FABRICATION
Mansfield, OH 44906
419-529-2744 FAX 419-529-5387 http://www.northcentralfabri

AISC CERTIFIED FABRICATOR

DESCRIPTION
BENT_PLATE

DATE	DATE	JOB No.
05/23/2011		70234
DRAWN BY	DRAWN BY	DRG No.
TMc	TAN	M40

MATERIAL NOTE:
W-SHAPES, CHANNELS: ASTM A992
ANGLES, S-SHAPES: ASTM A36
PLATE AND BAR: ASTM A36
PIPE: ASTM A53, GRADE B
HSS: ASTM A500, GRADE B

PROCESS CONTROL
PROCESS BY
FAB: _____
FIT AND WELD: _____
INSPECTION: _____
OTHER (IF NEEDED) _____
_____ : _____
_____ : _____
_____ : _____
_____ : _____
REFERENCE LATEST ERECTION DRAWINGS FOR MATERIAL & FABRICATION INFORMATION

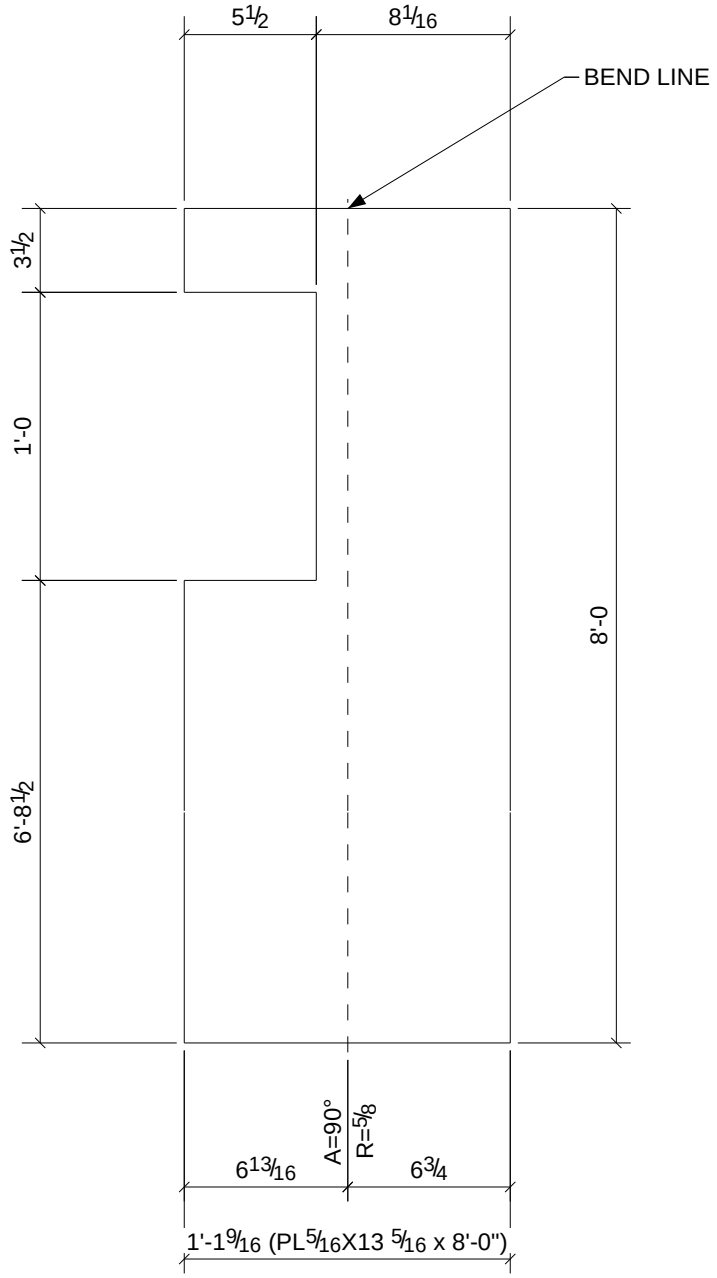

1	M41
Qty.	In Assembly

Qty.	Mark	Size	Length	Comments	Grade
1	M41	PL5/16"X13 5/16"	8'-0"		A36

PROJECT NAME
OLDE ORCHARD ELEMENTARY SCHOOL

LOCATION
800 McNAUGHTEN RD. COLUMBUS, OHIO 43213

CUSTOMER
THOMAS AND MARKER CONSTRUCTION

ARCHITECT
BRAUN & STEIDL

NORTH CENTRAL FABRICATION
Mansfield, OH 44906
419-529-2744 FAX 419-529-5387 http://www.northcentralfabri

AISC CERTIFIED FABRICATOR

DESCRIPTION	DATE	DATE	JOB No.
BENT_PLATE	05/23/2011		70234
	DRAWN BY TMc	DRAWN BY TAN	DRG No. M41

MATERIAL NOTE:
W-SHAPES, CHANNELS: ASTM A992
ANGLES, S-SHAPES: ASTM A36
PLATE AND BAR: ASTM A36
PIPE: ASTM A53, GRADE B
HSS: ASTM A500, GRADE B

PROCESS CONTROL
PROCESS BY
FAB: _____
FIT AND WELD: _____
INSPECTION: _____
OTHER (IF NEEDED) _____
_____ : _____
_____ : _____
_____ : _____
_____ : _____
REFERENCE LATEST ERECTION DRAWINGS FOR MATERIAL & FABRICATION INFORMATION

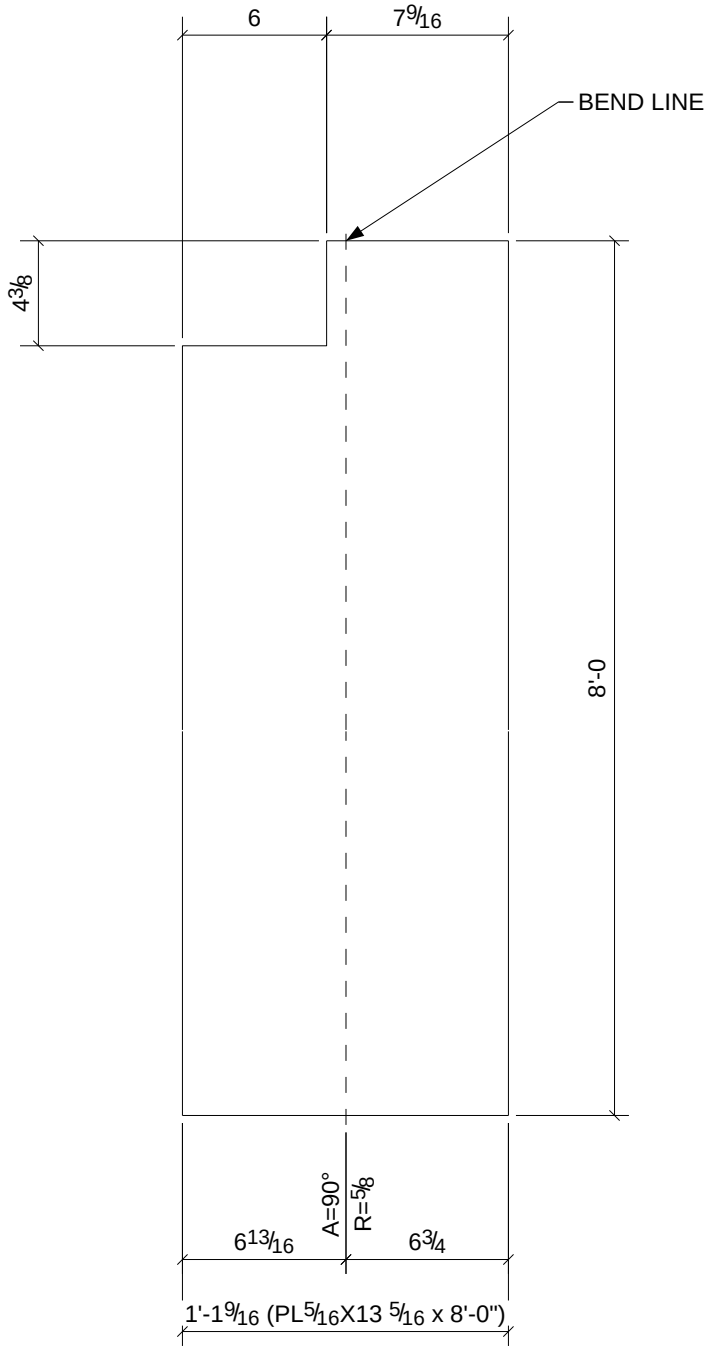

Qty.	Mark	Size	Length	Comments	Grade
1	M44	PL5/16"X13 5/16"	8'-0"		A36

Qty.	In Assembly
1	M44

PROJECT NAME
OLDE ORCHARD ELEMENTARY SCHOOL

LOCATION
800 McNAUGHTEN RD. COLUMBUS, OHIO 43213

CUSTOMER
THOMAS AND MARKER CONSTRUCTION

ARCHITECT
BRAUN & STEIDL

NORTH CENTRAL FABRICATION
Mansfield, OH 44906
419-529-2744 FAX 419-529-5387 http://www.northcentralfabri

AISC CERTIFIED FABRICATOR

DESCRIPTION
BENT_PLATE

DATE	DATE	JOB No.
05/23/2011		70234
DRAWN BY	DRAWN BY	DRG No.
TMc	TAN	M44

MATERIAL NOTE:
W-SHAPES, CHANNELS: ASTM A992
ANGLES, S-SHAPES: ASTM A36
PLATE AND BAR: ASTM A36
PIPE: ASTM A53, GRADE B
HSS: ASTM A500, GRADE B

PROCESS CONTROL
PROCESS BY
FAB: _____
FIT AND WELD: _____
INSPECTION: _____
OTHER (IF NEEDED) _____
_____ : _____
_____ : _____
_____ : _____
_____ : _____
REFERENCE LATEST ERECTION DRAWINGS FOR MATERIAL & FABRICATION INFORMATION

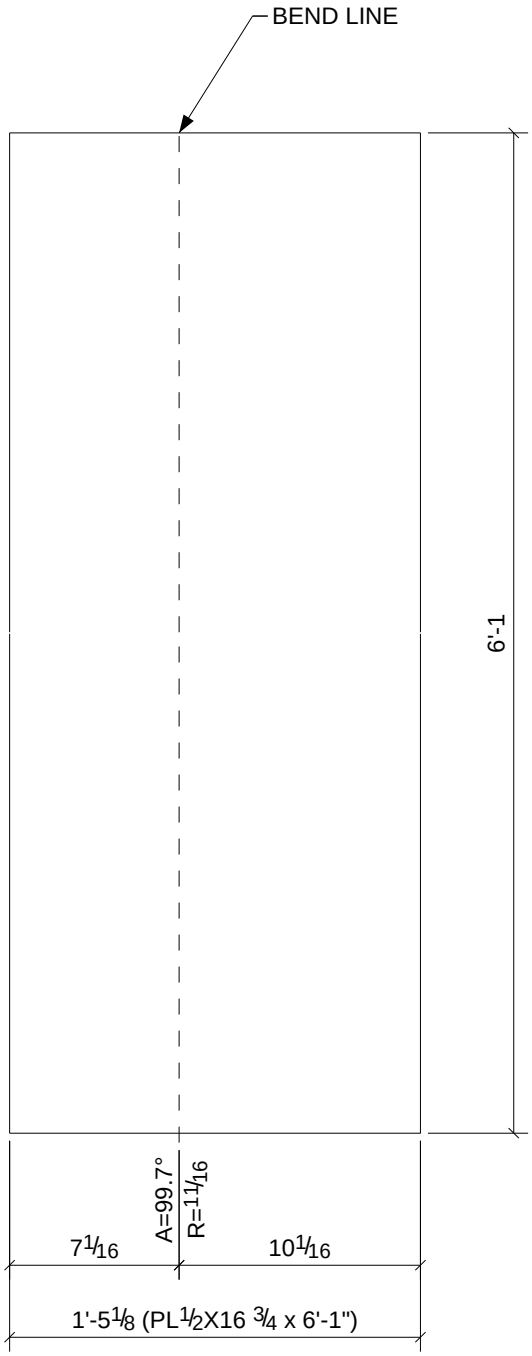

Qty.	Mark	Size	Length	Comments	Grade
1	M91	PL1/2"X16 3/4"	6'-1"		A36

Qty.	In Assembly
1	M91

PROJECT NAME
OLDE ORCHARD ELEMENTARY SCHOOL

LOCATION
800 McNAUGHTEN RD. COLUMBUS, OHIO 43213

CUSTOMER
THOMAS AND MARKER CONSTRUCTION

ARCHITECT
BRAUN & STEIDL

NORTH CENTRAL FABRICATION
Mansfield, OH 44906
419-529-2744 FAX 419-529-5387 http://www.northcentralfabri

AISC CERTIFIED FABRICATOR

DESCRIPTION
BENT_PLATE

DATE	DATE	JOB No.
05/23/2011		70234
DRAWN BY	DRAWN BY	DRG No.
TMc	TAN	M91

MATERIAL NOTE:
W-SHAPES, CHANNELS: ASTM A992
ANGLES, S-SHAPES: ASTM A36
PLATE AND BAR: ASTM A36
PIPE: ASTM A53, GRADE B
HSS: ASTM A500, GRADE B

PROCESS CONTROL
PROCESS BY
FAB: _____
FIT AND WELD: _____
INSPECTION: _____
OTHER (IF NEEDED) _____
_____ : _____
_____ : _____
_____ : _____
_____ : _____
REFERENCE LATEST ERECTION DRAWINGS FOR MATERIAL & FABRICATION INFORMATION

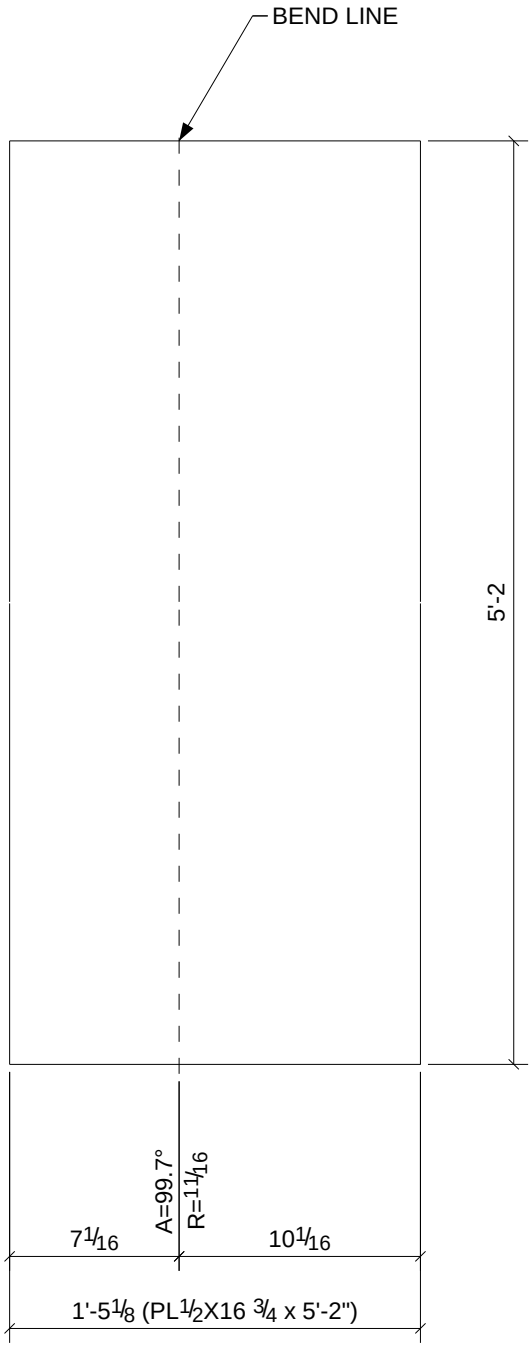

Qty.	In Assembly
3	M95

Qty.	Mark	Size	Length	Comments	Grade
3	M95	PL1/2"X16 3/4"	5'-2"		A36

PROJECT NAME
OLDE ORCHARD ELEMENTARY SCHOOL

LOCATION
800 McNAUGHTEN RD. COLUMBUS, OHIO 43213

CUSTOMER
THOMAS AND MARKER CONSTRUCTION

ARCHITECT
BRAUN & STEIDL

NORTH CENTRAL FABRICATION
Mansfield, OH 44906
419-529-2744 FAX 419-529-5387 http://www.northcentralfabri

AISC CERTIFIED FABRICATOR

DESCRIPTION	DATE	DATE	JOB No.
BENT_PLATE	05/23/2011		70234
	DRAWN BY TMc	DRAWN BY TAN	DRG No. M95

MATERIAL NOTE:
W-SHAPES, CHANNELS: ASTM A992
ANGLES, S-SHAPES: ASTM A36
PLATE AND BAR: ASTM A36
PIPE: ASTM A53, GRADE B
HSS: ASTM A500, GRADE B

PROCESS CONTROL
PROCESS BY
FAB: _____
FIT AND WELD: _____
INSPECTION: _____
OTHER (IF NEEDED) _____
_____ : _____
_____ : _____
_____ : _____
_____ : _____
REFERENCE LATEST ERECTION DRAWINGS FOR MATERIAL & FABRICATION INFORMATION

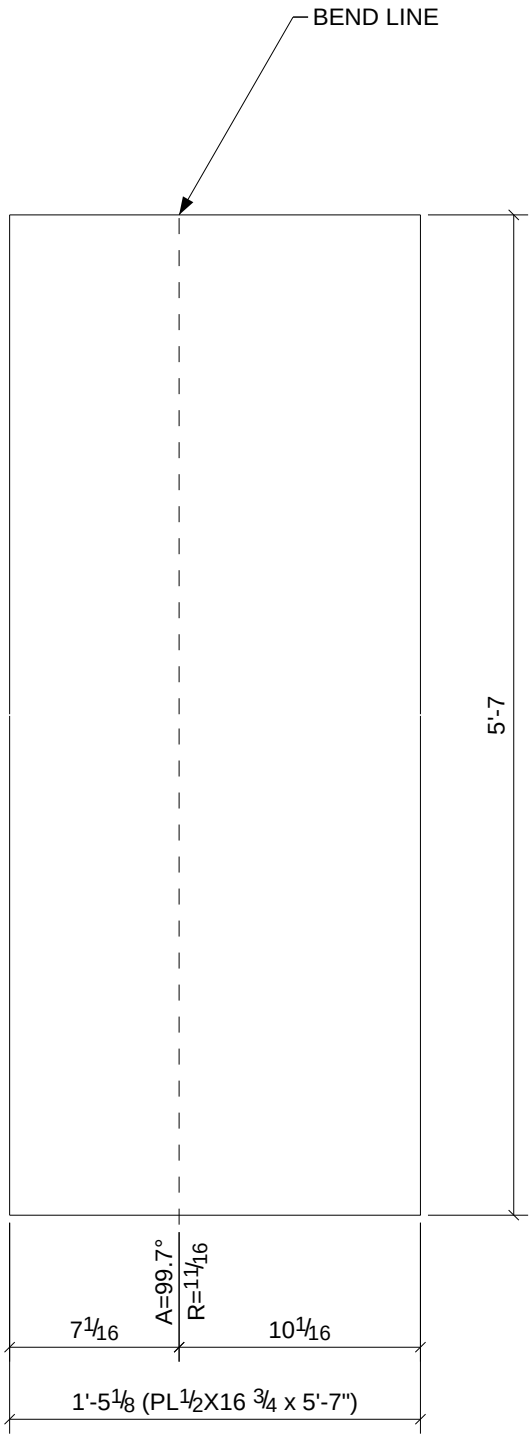

Qty.	In Assembly
1	M111

Qty.	Mark	Size	Length	Comments	Grade
1	M111	PL1/2"X16 3/4"	5'-7"		A36

PROJECT NAME
OLDE ORCHARD ELEMENTARY SCHOOL

LOCATION
800 McNAUGHTEN RD. COLUMBUS, OHIO 43213

CUSTOMER
THOMAS AND MARKER CONSTRUCTION

ARCHITECT
BRAUN & STEIDL

NORTH CENTRAL FABRICATION
Mansfield, OH 44906
419-529-2744 FAX 419-529-5387 http://www.northcentralfabri

AISC CERTIFIED FABRICATOR

DESCRIPTION	DATE	DATE	JOB No.
BENT_PLATE	05/23/2011		70234
	DRAWN BY TMc	DRAWN BY TAN	DRG No. M111

MATERIAL NOTE:
W-SHAPES, CHANNELS: ASTM A992
ANGLES, S-SHAPES: ASTM A36
PLATE AND BAR: ASTM A36
PIPE: ASTM A53, GRADE B
HSS: ASTM A500, GRADE B

PROCESS CONTROL
PROCESS BY
FAB: _____
FIT AND WELD: _____
INSPECTION: _____
OTHER (IF NEEDED) _____
_____ : _____
_____ : _____
_____ : _____
_____ : _____
REFERENCE LATEST ERECTION DRAWINGS FOR MATERIAL & FABRICATION INFORMATION

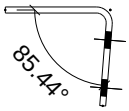

A - A

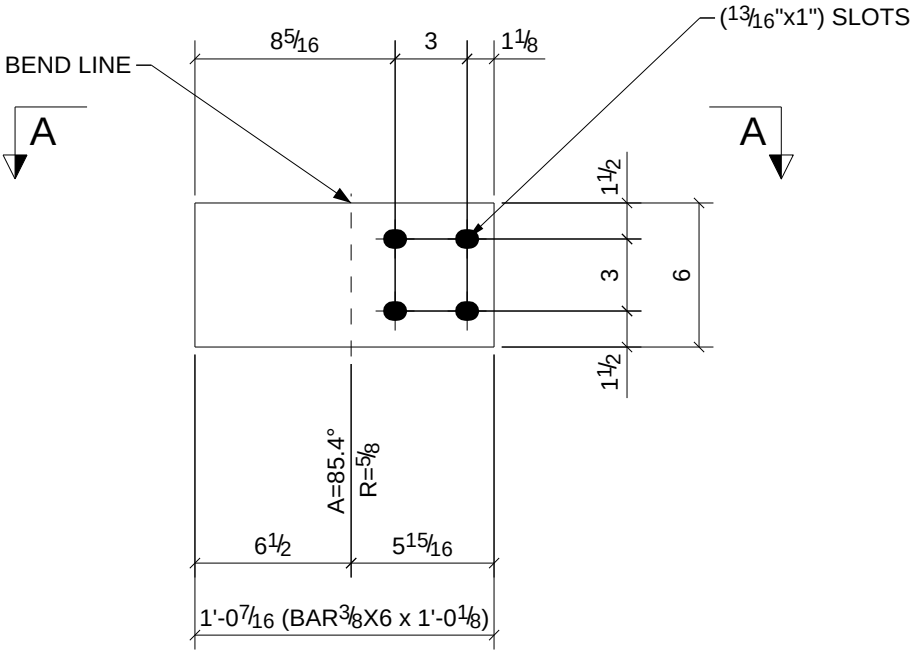

1	B96
1	B110
Qty.	In Assembly

Qty.	Mark	Size	Length	Comments	Grade
2	p51	BAR3/8"X6"	1'-0 1/8"		A36

PROJECT NAME
OLDE ORCHARD ELEMENTARY SCHOOL

LOCATION
800 McNAUGHTEN RD. COLUMBUS, OHIO 43213

CUSTOMER
THOMAS AND MARKER CONSTRUCTION

ARCHITECT
BRAUN & STEIDL

NORTH CENTRAL FABRICATION
Mansfield, OH 44906
419-529-2744 FAX 419-529-5387 http://www.northcentralfabri

AISC CERTIFIED FABRICATOR

DESCRIPTION
BENT_PLATE

DATE	DATE	JOB No.
05/23/2011		70234
DRAWN BY	DRAWN BY	DRG No.
TMc	TAN	p51

MATERIAL NOTE:
W-SHAPES, CHANNELS: ASTM A992
ANGLES, S-SHAPES: ASTM A36
PLATE AND BAR: ASTM A36
PIPE: ASTM A53, GRADE B
HSS: ASTM A500, GRADE B

PROCESS CONTROL
PROCESS BY
FAB: _____
FIT AND WELD: _____
INSPECTION: _____
OTHER (IF NEEDED) _____
_____ : _____
_____ : _____
_____ : _____
_____ : _____
REFERENCE LATEST ERECTION DRAWINGS FOR MATERIAL & FABRICATION INFORMATION

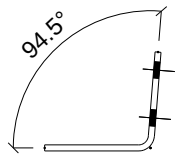

A - A

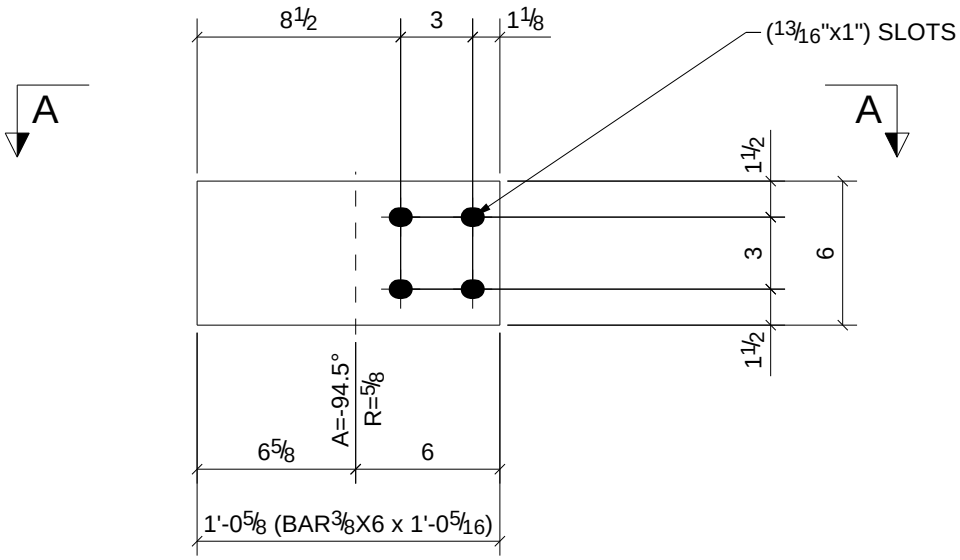

1	B96
1	B110
Qty.	In Assembly

Qty.	Mark	Size	Length	Comments	Grade
2	p52	BAR3/8"X6"	1'-0 5/16"		A36

PROJECT NAME
OLDE ORCHARD ELEMENTARY SCHOOL

LOCATION
800 McNAUGHTEN RD. COLUMBUS, OHIO 43213

CUSTOMER
THOMAS AND MARKER CONSTRUCTION

ARCHITECT
BRAUN & STEIDL

NORTH CENTRAL FABRICATION
Mansfield, OH 44906
419-529-2744 FAX 419-529-5387 http://www.northcentralfabri

AISC CERTIFIED FABRICATOR

DESCRIPTION
BENT_PLATE

DATE	DATE	JOB No.
05/23/2011		70234
DRAWN BY	DRAWN BY	DRG No.
TMc	TAN	p52

MATERIAL NOTE:
W-SHAPES, CHANNELS: ASTM A992
ANGLES, S-SHAPES: ASTM A36
PLATE AND BAR: ASTM A36
PIPE: ASTM A53, GRADE B
HSS: ASTM A500, GRADE B

PROCESS CONTROL
PROCESS BY
FAB: _____
FIT AND WELD: _____
INSPECTION: _____
OTHER (IF NEEDED) _____
_____ : _____
_____ : _____
_____ : _____
_____ : _____
REFERENCE LATEST ERECTION DRAWINGS FOR MATERIAL & FABRICATION INFORMATION

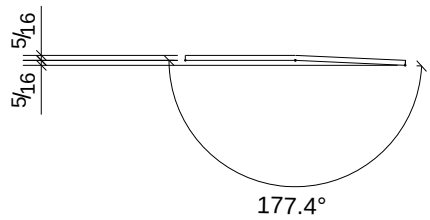

A - A

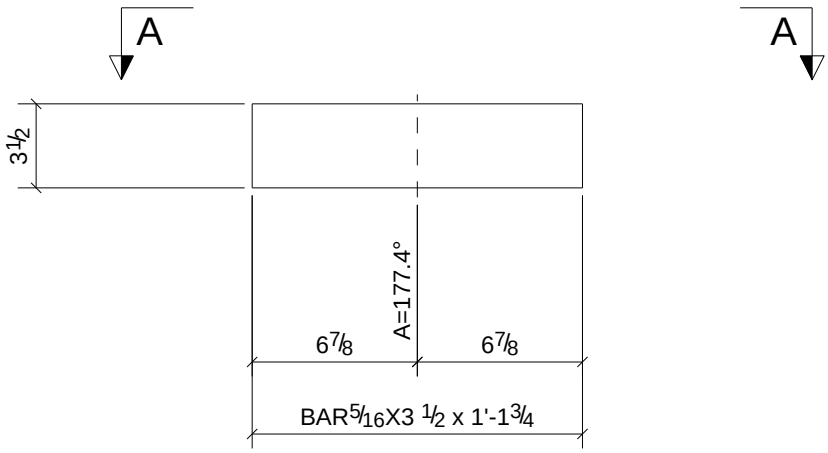

1	B85
Qty.	In Assembly

Qty.	Mark	Size	Length	Comments	Grade
1	p73	BAR5/16"X3 1/2"	1'-1 3/4"		A36

PROJECT NAME
OLDE ORCHARD ELEMENTARY SCHOOL

LOCATION
800 McNAUGHTEN RD. COLUMBUS, OHIO 43213

CUSTOMER
THOMAS AND MARKER CONSTRUCTION

ARCHITECT
BRAUN & STEIDL

NORTH CENTRAL FABRICATION
Mansfield, OH 44906
419-529-2744 FAX 419-529-5387 http://www.northcentralfabri

AISC CERTIFIED FABRICATOR

DESCRIPTION
BENT_PLATE

DATE	DATE	JOB No.
05/23/2011		70234
DRAWN BY	DRAWN BY	DRG No.
TMc	TAN	p73

MATERIAL NOTE:
W-SHAPES, CHANNELS: ASTM A992
ANGLES, S-SHAPES: ASTM A36
PLATE AND BAR: ASTM A36
PIPE: ASTM A53, GRADE B
HSS: ASTM A500, GRADE B

PROCESS CONTROL
PROCESS BY
FAB: _____
FIT AND WELD: _____
INSPECTION: _____
OTHER (IF NEEDED) _____
_____ : _____
_____ : _____
_____ : _____
_____ : _____
REFERENCE LATEST ERECTION DRAWINGS FOR MATERIAL & FABRICATION INFORMATION

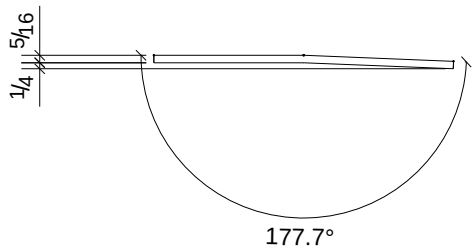

A - A

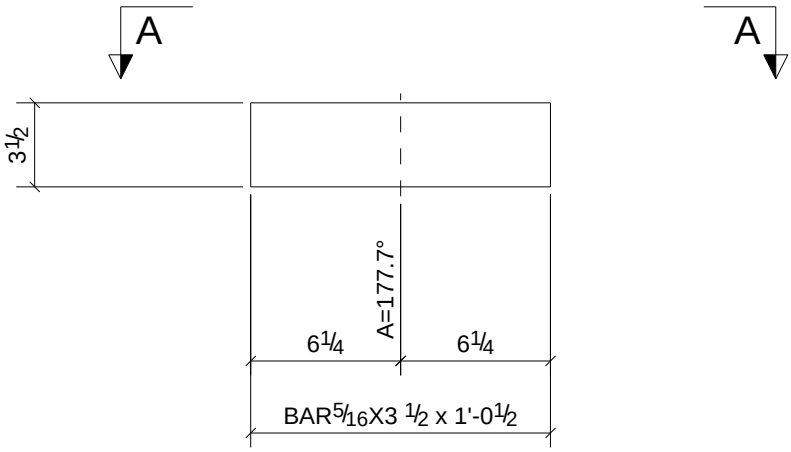

1	B85
Qty.	In Assembly

Qty.	Mark	Size	Length	Comments	Grade
1	p74	BAR5/16"X3 1/2"	1'-0 1/2"		A36

PROJECT NAME
OLDE ORCHARD ELEMENTARY SCHOOL

LOCATION
800 McNAUGHTEN RD. COLUMBUS, OHIO 43213

CUSTOMER
THOMAS AND MARKER CONSTRUCTION

ARCHITECT
BRAUN & STEIDL

NORTH CENTRAL FABRICATION
Mansfield, OH 44906
419-529-2744 FAX 419-529-5387 http://www.northcentralfabri

AISC CERTIFIED FABRICATOR

DESCRIPTION
BENT_PLATE

DATE	DATE	JOB No.
05/23/2011		70234
DRAWN BY	DRAWN BY	DRG No.
TMc	TAN	p74

MATERIAL NOTE:
W-SHAPES, CHANNELS: ASTM A992
ANGLES, S-SHAPES: ASTM A36
PLATE AND BAR: ASTM A36
PIPE: ASTM A53, GRADE B
HSS: ASTM A500, GRADE B

PROCESS CONTROL
PROCESS BY
FAB: _____
FIT AND WELD: _____
INSPECTION: _____
OTHER (IF NEEDED) _____
_____ : _____
_____ : _____
_____ : _____
_____ : _____
REFERENCE LATEST ERECTION DRAWINGS FOR MATERIAL & FABRICATION INFORMATION

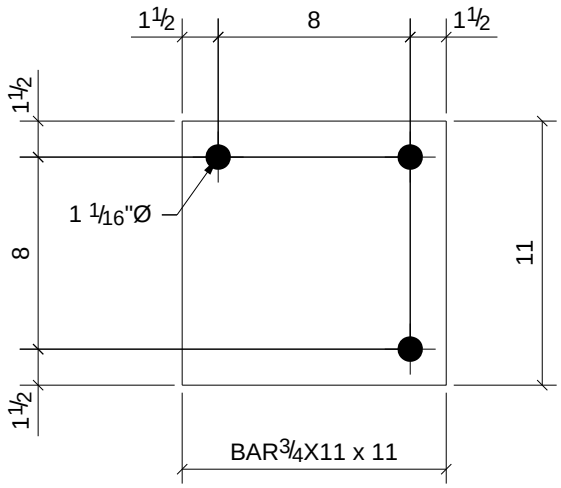

1	C34
Qty.	In Assembly

1	BP1	BAR3/4"X11"	0'-11"		A36
Qty.	Mark	Size	Length	Comments	Grade

PROJECT NAME
OLDE ORCHARD ELEMENTARY SCHOOL

LOCATION
800 McNAUGHTEN RD. COLUMBUS, OHIO 43213

CUSTOMER
THOMAS AND MARKER CONSTRUCTION

ARCHITECT
BRAUN & STEIDL

NORTH CENTRAL FABRICATION
Mansfield, OH 44906
419-529-2744 FAX 419-529-5387 http://www.northcentralfabri

AISC CERTIFIED FABRICATOR

DESCRIPTION	DATE	DATE	JOB No.
PLATE	05/23/2011		70234
	DRAWN BY TMc	DRAWN BY TAN	DRG No. BP1

MATERIAL NOTE:
W-SHAPES, CHANNELS: ASTM A992
ANGLES, S-SHAPES: ASTM A36
PLATE AND BAR: ASTM A36
PIPE: ASTM A53, GRADE B
HSS: ASTM A500, GRADE B

PROCESS CONTROL
PROCESS BY
FAB: _____
FIT AND WELD: _____
INSPECTION: _____
OTHER (IF NEEDED) _____
_____ : _____
_____ : _____
_____ : _____
_____ : _____
REFERENCE LATEST ERECTION DRAWINGS FOR MATERIAL & FABRICATION INFORMATION

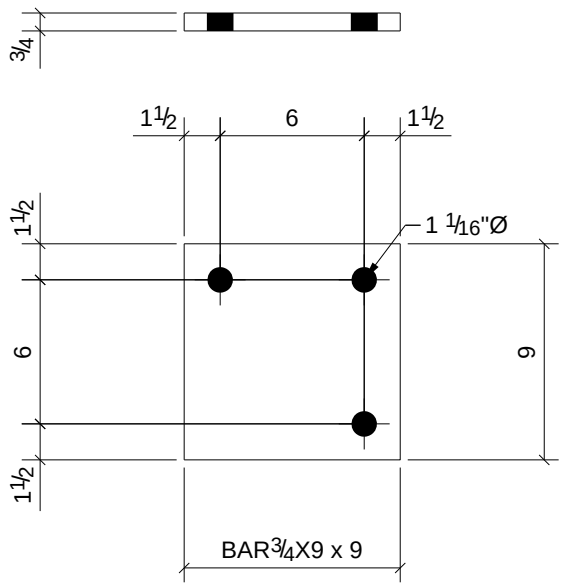

Qty.	In Assembly
1	C22

Qty.	Mark	Size	Length	Comments	Grade
1	BP2	BAR3/4"X9"	0'-9"		A36

PROJECT NAME
OLDE ORCHARD ELEMENTARY SCHOOL

LOCATION
800 McNAUGHTEN RD. COLUMBUS, OHIO 43213

CUSTOMER
THOMAS AND MARKER CONSTRUCTION

ARCHITECT
BRAUN & STEIDL

NORTH CENTRAL FABRICATION
Mansfield, OH 44906
419-529-2744 FAX 419-529-5387 http://www.northcentralfabri

AISC CERTIFIED FABRICATOR

DESCRIPTION
PLATE

DATE	DATE	JOB No.
05/23/2011		70234
DRAWN BY	DRAWN BY	DRG No.
TMc	TAN	BP2

MATERIAL NOTE:
W-SHAPES, CHANNELS: ASTM A992
ANGLES, S-SHAPES: ASTM A36
PLATE AND BAR: ASTM A36
PIPE: ASTM A53, GRADE B
HSS: ASTM A500, GRADE B

PROCESS CONTROL
PROCESS BY
FAB: _____
FIT AND WELD: _____
INSPECTION: _____
OTHER (IF NEEDED) _____
_____ : _____
_____ : _____
_____ : _____
_____ : _____
REFERENCE LATEST ERECTION DRAWINGS FOR MATERIAL & FABRICATION INFORMATION

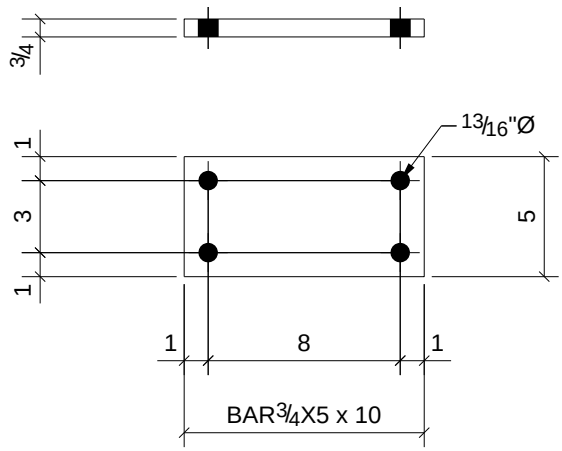

1	C13
2	C15
1	C17
1	C46
Qty.	In Assembly

Qty.	Mark	Size	Length	Comments	Grade
5	BP3	BAR3/4"X5"	0'-10"		A36

PROJECT NAME
OLDE ORCHARD ELEMENTARY SCHOOL

LOCATION
800 McNAUGHTEN RD. COLUMBUS, OHIO 43213

CUSTOMER
THOMAS AND MARKER CONSTRUCTION

ARCHITECT
BRAUN & STEIDL

NORTH CENTRAL FABRICATION
Mansfield, OH 44906
419-529-2744 FAX 419-529-5387 http://www.northcentralfabri

AISC CERTIFIED FABRICATOR

DESCRIPTION
PLATE

DATE	DATE	JOB No.
05/23/2011		70234
DRAWN BY	DRAWN BY	DRG No.
TMc	TAN	BP3

MATERIAL NOTE:
W-SHAPES, CHANNELS: ASTM A992
ANGLES, S-SHAPES: ASTM A36
PLATE AND BAR: ASTM A36
PIPE: ASTM A53, GRADE B
HSS: ASTM A500, GRADE B

PROCESS CONTROL
PROCESS BY
FAB: _____
FIT AND WELD: _____
INSPECTION: _____
OTHER (IF NEEDED) _____
_____ : _____
_____ : _____
_____ : _____
_____ : _____
REFERENCE LATEST ERECTION DRAWINGS FOR MATERIAL & FABRICATION INFORMATION

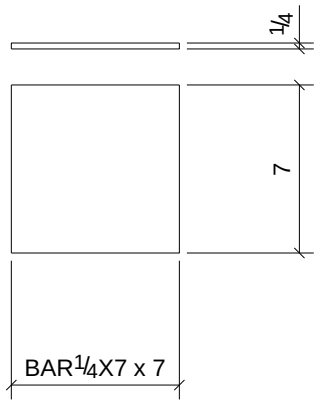

Qty.	In Assembly
10	BP4

Qty.	Mark	Size	Length	Comments	Grade
10	BP4	BAR1/4"X7"	0'-7"		A36

PROJECT NAME
OLDE ORCHARD ELEMENTARY SCHOOL

LOCATION
800 McNAUGHTEN RD. COLUMBUS, OHIO 43213

CUSTOMER
THOMAS AND MARKER CONSTRUCTION

ARCHITECT
BRAUN & STEIDL

NORTH CENTRAL FABRICATION
Mansfield, OH 44906
419-529-2744 FAX 419-529-5387 http://www.northcentralfabri

AISC CERTIFIED FABRICATOR

DESCRIPTION	DATE	DATE	JOB No.
PLATE	05/23/2011		70234
	DRAWN BY TMc	DRAWN BY TAN	DRG No. BP4

MATERIAL NOTE:
W-SHAPES, CHANNELS: ASTM A992
ANGLES, S-SHAPES: ASTM A36
PLATE AND BAR: ASTM A36
PIPE: ASTM A53, GRADE B
HSS: ASTM A500, GRADE B

PROCESS CONTROL
PROCESS BY
FAB: _____
FIT AND WELD: _____
INSPECTION: _____
OTHER (IF NEEDED) _____
_____ : _____
_____ : _____
_____ : _____
_____ : _____
REFERENCE LATEST ERECTION DRAWINGS FOR MATERIAL & FABRICATION INFORMATION

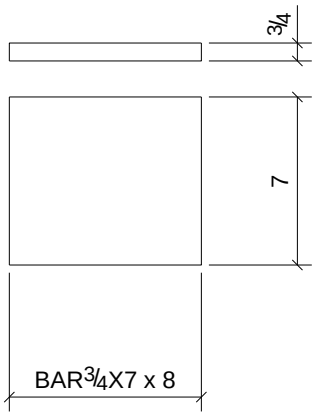

Qty.	In Assembly
7	BP5

Qty.	Mark	Size	Length	Comments	Grade
7	BP5	BAR3/4"X7"	0'-8"		A36

PROJECT NAME
OLDE ORCHARD ELEMENTARY SCHOOL

LOCATION
800 McNAUGHTEN RD. COLUMBUS, OHIO 43213

CUSTOMER
THOMAS AND MARKER CONSTRUCTION

ARCHITECT
BRAUN & STEIDL

NORTH CENTRAL FABRICATION
Mansfield, OH 44906
419-529-2744 FAX 419-529-5387 http://www.northcentralfabri

AISC CERTIFIED FABRICATOR

DESCRIPTION	DATE	DATE	JOB No.
PLATE	05/23/2011		70234
	DRAWN BY TMc	DRAWN BY TAN	DRG No. BP5

MATERIAL NOTE:
W-SHAPES, CHANNELS: ASTM A992
ANGLES, S-SHAPES: ASTM A36
PLATE AND BAR: ASTM A36
PIPE: ASTM A53, GRADE B
HSS: ASTM A500, GRADE B

PROCESS CONTROL
PROCESS BY
FAB: _____
FIT AND WELD: _____
INSPECTION: _____
OTHER (IF NEEDED) _____
_____ : _____
_____ : _____
_____ : _____
_____ : _____
REFERENCE LATEST ERECTION DRAWINGS FOR MATERIAL & FABRICATION INFORMATION

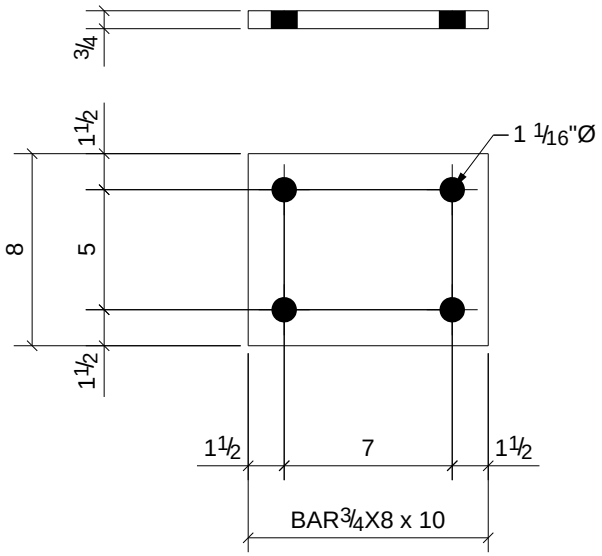

Qty.	In Assembly
2	C1
2	C2
5	C4
2	C6
1	C14
3	C38

Qty.	Mark	Size	Length	Comments	Grade
15	BP6	BAR3/4"X8"	0'-10"		A36

PROJECT NAME
OLDE ORCHARD ELEMENTARY SCHOOL

LOCATION
800 McNAUGHTEN RD. COLUMBUS, OHIO 43213

CUSTOMER
THOMAS AND MARKER CONSTRUCTION

ARCHITECT
BRAUN & STEIDL

NORTH CENTRAL FABRICATION
Mansfield, OH 44906
419-529-2744 FAX 419-529-5387 http://www.northcentralfabri

AISC CERTIFIED FABRICATOR

DESCRIPTION
PLATE

DATE	DATE	JOB No.
05/23/2011		70234
DRAWN BY	DRAWN BY	DRG No.
TMc	TAN	BP6

MATERIAL NOTE:
W-SHAPES, CHANNELS: ASTM A992
ANGLES, S-SHAPES: ASTM A36
PLATE AND BAR: ASTM A36
PIPE: ASTM A53, GRADE B
HSS: ASTM A500, GRADE B

PROCESS CONTROL
PROCESS BY
FAB: _____
FIT AND WELD: _____
INSPECTION: _____
OTHER (IF NEEDED) _____
_____ : _____
_____ : _____
_____ : _____
_____ : _____
REFERENCE LATEST ERECTION DRAWINGS FOR MATERIAL & FABRICATION INFORMATION

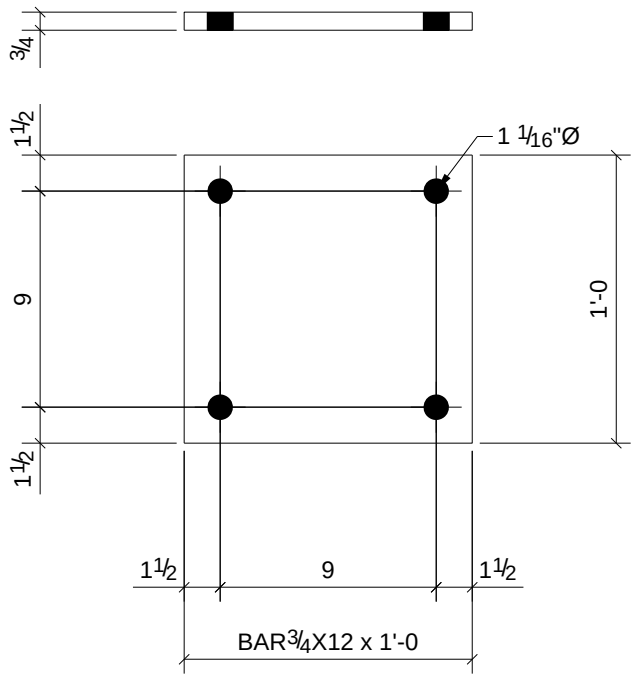

Qty.	In Assembly
1	C8
2	C9
1	C11
2	C16
1	C25
1	C41
1	C43

Qty.	Mark	Size	Length	Comments	Grade
9	BP7	BAR3/4"X12"	1'-0"		A36

PROJECT NAME
OLDE ORCHARD ELEMENTARY SCHOOL

LOCATION
800 McNAUGHTEN RD. COLUMBUS, OHIO 43213

CUSTOMER
THOMAS AND MARKER CONSTRUCTION

ARCHITECT
BRAUN & STEIDL

NORTH CENTRAL FABRICATION
Mansfield, OH 44906
419-529-2744 FAX 419-529-5387 http://www.northcentralfabri

AISC CERTIFIED FABRICATOR

DESCRIPTION
PLATE

DATE	DATE	JOB No.
05/23/2011		70234
DRAWN BY	DRAWN BY	DRG No.
TMc	TAN	BP7

MATERIAL NOTE:
W-SHAPES, CHANNELS: ASTM A992
ANGLES, S-SHAPES: ASTM A36
PLATE AND BAR: ASTM A36
PIPE: ASTM A53, GRADE B
HSS: ASTM A500, GRADE B

PROCESS CONTROL
PROCESS BY
FAB: _____
FIT AND WELD: _____
INSPECTION: _____
OTHER (IF NEEDED) _____
_____ : _____
_____ : _____
_____ : _____
_____ : _____
REFERENCE LATEST ERECTION DRAWINGS FOR MATERIAL & FABRICATION INFORMATION

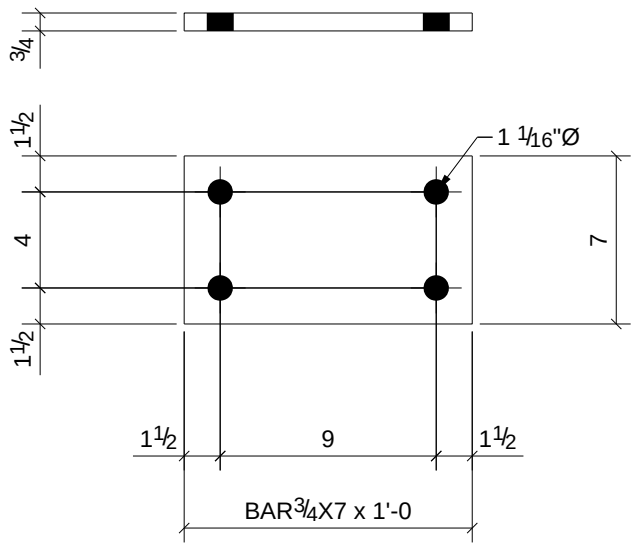

1	C44
1	C45
Qty.	In Assembly

Qty.	Mark	Size	Length	Comments	Grade
2	BP8	BAR3/4"X7"	1'-0"		A36

PROJECT NAME
OLDE ORCHARD ELEMENTARY SCHOOL

LOCATION
800 McNAUGHTEN RD. COLUMBUS, OHIO 43213

CUSTOMER
THOMAS AND MARKER CONSTRUCTION

ARCHITECT
BRAUN & STEIDL

NORTH CENTRAL FABRICATION
Mansfield, OH 44906
419-529-2744 FAX 419-529-5387 http://www.northcentralfabri

AISC CERTIFIED FABRICATOR

DESCRIPTION	DATE	DATE	JOB No.
PLATE	05/23/2011		70234
	DRAWN BY TMc	DRAWN BY TAN	DRG No. BP8

MATERIAL NOTE:
W-SHAPES, CHANNELS: ASTM A992
ANGLES, S-SHAPES: ASTM A36
PLATE AND BAR: ASTM A36
PIPE: ASTM A53, GRADE B
HSS: ASTM A500, GRADE B

PROCESS CONTROL
PROCESS BY
FAB: _____
FIT AND WELD: _____
INSPECTION: _____
OTHER (IF NEEDED) _____
_____ : _____
_____ : _____
_____ : _____
_____ : _____
REFERENCE LATEST ERECTION DRAWINGS FOR MATERIAL & FABRICATION INFORMATION

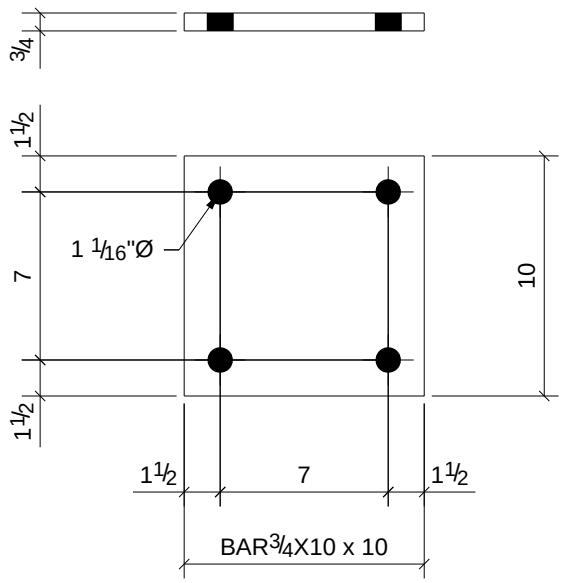

Qty.	In Assembly
3	C36

Qty.	Mark	Size	Length	Comments	Grade
3	BP9	BAR3/4"X10"	0'-10"		A36

PROJECT NAME
OLDE ORCHARD ELEMENTARY SCHOOL

LOCATION
800 McNAUGHTEN RD. COLUMBUS, OHIO 43213

CUSTOMER
THOMAS AND MARKER CONSTRUCTION

ARCHITECT
BRAUN & STEIDL

NORTH CENTRAL FABRICATION
Mansfield, OH 44906
419-529-2744 FAX 419-529-5387 http://www.northcentralfabri

AISC CERTIFIED FABRICATOR

DESCRIPTION
PLATE

DATE	DATE	JOB No.
05/23/2011		70234
DRAWN BY	DRAWN BY	DRG No.
TMc	TAN	BP9

MATERIAL NOTE:
W-SHAPES, CHANNELS: ASTM A992
ANGLES, S-SHAPES: ASTM A36
PLATE AND BAR: ASTM A36
PIPE: ASTM A53, GRADE B
HSS: ASTM A500, GRADE B

PROCESS CONTROL
PROCESS BY
FAB: _____
FIT AND WELD: _____
INSPECTION: _____
OTHER (IF NEEDED) _____
_____ : _____
_____ : _____
_____ : _____
_____ : _____
REFERENCE LATEST ERECTION DRAWINGS FOR MATERIAL & FABRICATION INFORMATION

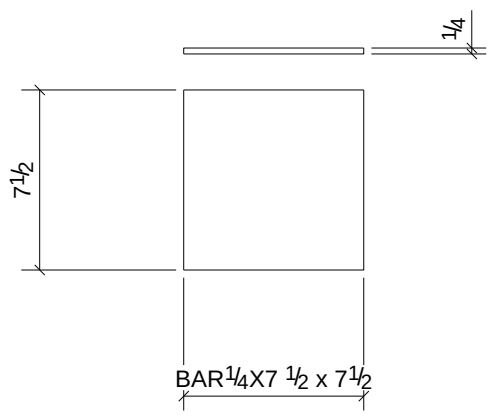

48	BP10
Qty.	In Assembly

Qty.	Mark	Size	Length	Comments	Grade
48	BP10	BAR1/4"X7 1/2"	0'-7 1/2"		A36

PROJECT NAME
OLDE ORCHARD ELEMENTARY SCHOOL

LOCATION
800 McNAUGHTEN RD. COLUMBUS, OHIO 43213

CUSTOMER
THOMAS AND MARKER CONSTRUCTION

ARCHITECT
BRAUN & STEIDL

NORTH CENTRAL FABRICATION
Mansfield, OH 44906
419-529-2744 FAX 419-529-5387 http://www.northcentralfabri

AISC CERTIFIED FABRICATOR

DESCRIPTION
PLATE

DATE	DATE	JOB No.
05/23/2011		70234
DRAWN BY	DRAWN BY	DRG No.
TMc	TAN	BP10

MATERIAL NOTE:
W-SHAPES, CHANNELS: ASTM A992
ANGLES, S-SHAPES: ASTM A36
PLATE AND BAR: ASTM A36
PIPE: ASTM A53, GRADE B
HSS: ASTM A500, GRADE B

PROCESS CONTROL
PROCESS BY
FAB: _____
FIT AND WELD: _____
INSPECTION: _____
OTHER (IF NEEDED) _____
_____ : _____
_____ : _____
_____ : _____
_____ : _____
REFERENCE LATEST ERECTION DRAWINGS FOR MATERIAL & FABRICATION INFORMATION

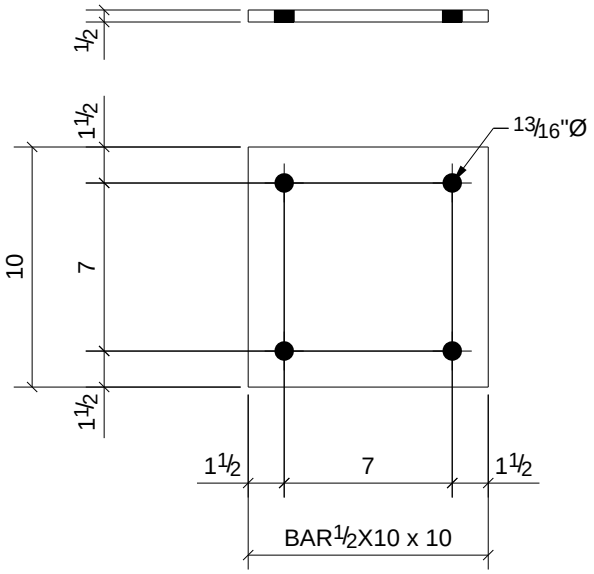

1	C52
Qty.	In Assembly

Qty.	Mark	Size	Length	Comments	Grade
1	BP11	BAR1/2"X10"	0'-10"		A992

PROJECT NAME
OLDE ORCHARD ELEMENTARY SCHOOL

LOCATION
800 McNAUGHTEN RD. COLUMBUS, OHIO 43213

CUSTOMER
THOMAS AND MARKER CONSTRUCTION

ARCHITECT
BRAUN & STEIDL

NORTH CENTRAL FABRICATION
Mansfield, OH 44906
419-529-2744 FAX 419-529-5387 http://www.northcentralfabri

AISC CERTIFIED FABRICATOR

DESCRIPTION	DATE	DATE	JOB No.
PLATE	05/23/2011		70234
	DRAWN BY TMc	DRAWN BY TAN	DRG No. BP11

MATERIAL NOTE:
W-SHAPES, CHANNELS: ASTM A992
ANGLES, S-SHAPES: ASTM A36
PLATE AND BAR: ASTM A36
PIPE: ASTM A53, GRADE B
HSS: ASTM A500, GRADE B

PROCESS CONTROL
PROCESS BY
FAB: _____
FIT AND WELD: _____
INSPECTION: _____
OTHER (IF NEEDED) _____
_____ : _____
_____ : _____
_____ : _____
_____ : _____
REFERENCE LATEST ERECTION DRAWINGS FOR MATERIAL & FABRICATION INFORMATION

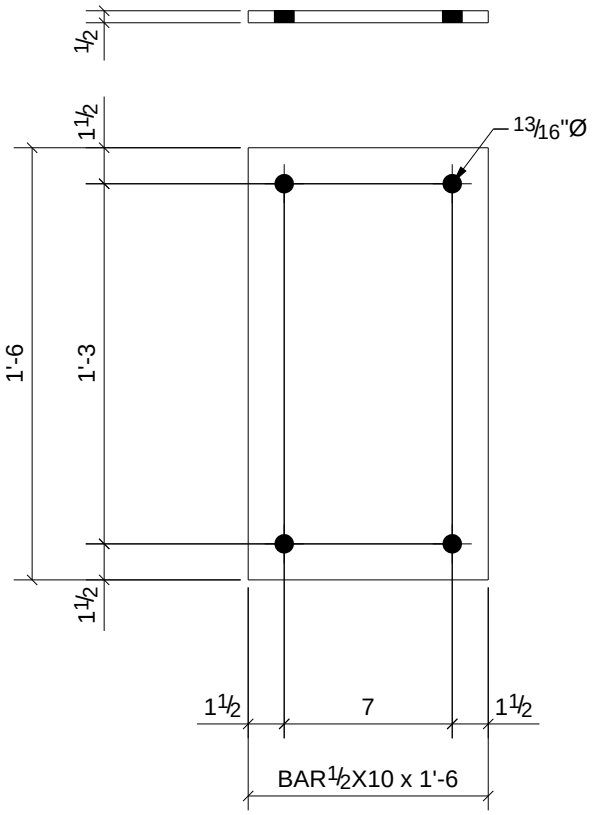

1	C31
Qty.	In Assembly

Qty.	Mark	Size	Length	Comments	Grade
1	BP12	BAR1/2"X10"	1'-6"		A992

PROJECT NAME
OLDE ORCHARD ELEMENTARY SCHOOL

LOCATION
800 McNAUGHTEN RD. COLUMBUS, OHIO 43213

CUSTOMER
THOMAS AND MARKER CONSTRUCTION

ARCHITECT
BRAUN & STEIDL

NORTH CENTRAL FABRICATION
Mansfield, OH 44906
419-529-2744 FAX 419-529-5387 http://www.northcentralfabri

AISC CERTIFIED FABRICATOR

DESCRIPTION	DATE	DATE	JOB No.
PLATE	05/23/2011		70234
	DRAWN BY TMc	DRAWN BY TAN	DRG No. BP12

MATERIAL NOTE:
W-SHAPES, CHANNELS: ASTM A992
ANGLES, S-SHAPES: ASTM A36
PLATE AND BAR: ASTM A36
PIPE: ASTM A53, GRADE B
HSS: ASTM A500, GRADE B

PROCESS CONTROL
PROCESS BY
FAB: _____
FIT AND WELD: _____
INSPECTION: _____
OTHER (IF NEEDED) _____
_____ : _____
_____ : _____
_____ : _____
_____ : _____
REFERENCE LATEST ERECTION DRAWINGS FOR MATERIAL & FABRICATION INFORMATION

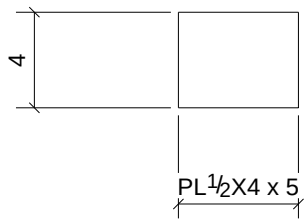

Qty.	In Assembly
5	C4

Qty.	Mark	Size	Length	Comments	Grade
5	p1	PL1/2"X4"	0'-5"		A36

PROJECT NAME
OLDE ORCHARD ELEMENTARY SCHOOL

LOCATION
800 McNAUGHTEN RD. COLUMBUS, OHIO 43213

CUSTOMER
THOMAS AND MARKER CONSTRUCTION

ARCHITECT
BRAUN & STEIDL

NORTH CENTRAL FABRICATION
Mansfield, OH 44906
419-529-2744 FAX 419-529-5387 http://www.northcentralfabri

AISC CERTIFIED FABRICATOR

DESCRIPTION
PLATE

DATE	DATE	JOB No.
05/23/2011		70234
DRAWN BY	DRAWN BY	DRG No.
TMc	TAN	p1

MATERIAL NOTE:
W-SHAPES, CHANNELS: ASTM A992
ANGLES, S-SHAPES: ASTM A36
PLATE AND BAR: ASTM A36
PIPE: ASTM A53, GRADE B
HSS: ASTM A500, GRADE B

PROCESS CONTROL
PROCESS BY
FAB: _____
FIT AND WELD: _____
INSPECTION: _____
OTHER (IF NEEDED) _____
_____ : _____
_____ : _____
_____ : _____
_____ : _____
REFERENCE LATEST ERECTION DRAWINGS FOR MATERIAL & FABRICATION INFORMATION

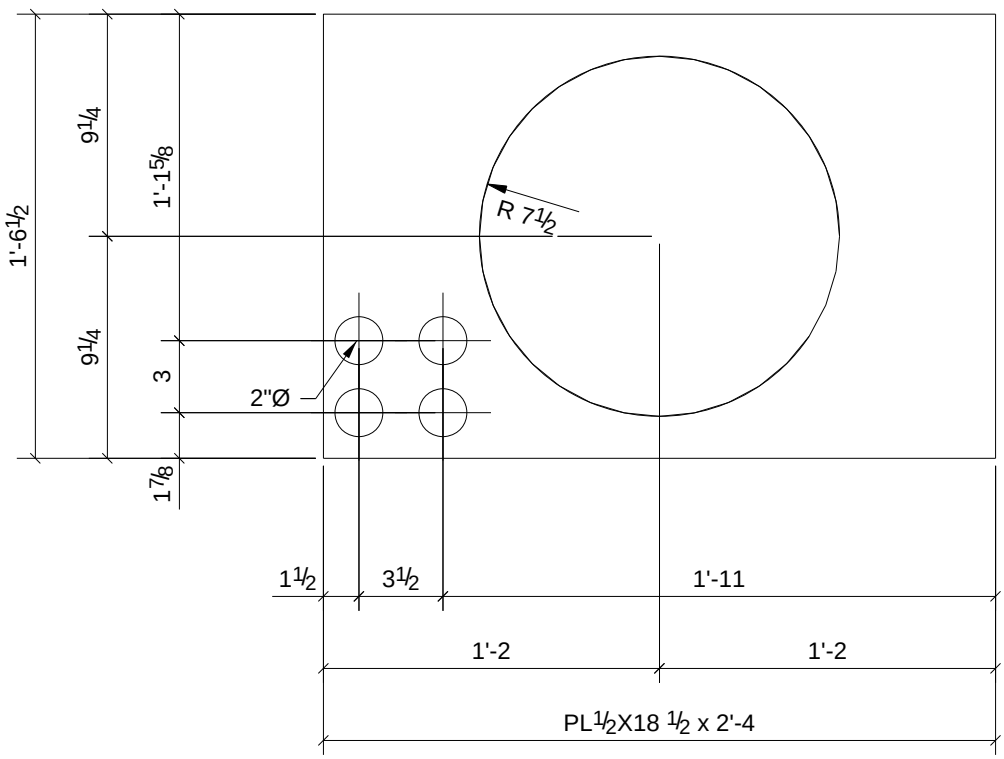

1	B98
Qty.	In Assembly

Qty.	Mark	Size	Length	Comments	Grade
1	p2	PL1/2"X18 1/2"	2'-4"		A36

PROJECT NAME
OLDE ORCHARD ELEMENTARY SCHOOL

LOCATION
800 McNAUGHTEN RD. COLUMBUS, OHIO 43213

CUSTOMER
THOMAS AND MARKER CONSTRUCTION

ARCHITECT
BRAUN & STEIDL

NORTH CENTRAL FABRICATION
Mansfield, OH 44906
419-529-2744 FAX 419-529-5387 http://www.northcentralfabri

AISC CERTIFIED FABRICATOR

DESCRIPTION	DATE	DATE	JOB No.
PLATE	05/22/2011		70234
	DRAWN BY TMc	DRAWN BY TAN	DRG No. p2

MATERIAL NOTE:
W-SHAPES, CHANNELS: ASTM A992
ANGLES, S-SHAPES: ASTM A36
PLATE AND BAR: ASTM A36
PIPE: ASTM A53, GRADE B
HSS: ASTM A500, GRADE B

PROCESS CONTROL
PROCESS BY
FAB: _____
FIT AND WELD: _____
INSPECTION: _____
OTHER (IF NEEDED) _____
_____ : _____
_____ : _____
_____ : _____
_____ : _____
REFERENCE LATEST ERECTION DRAWINGS FOR MATERIAL & FABRICATION INFORMATION

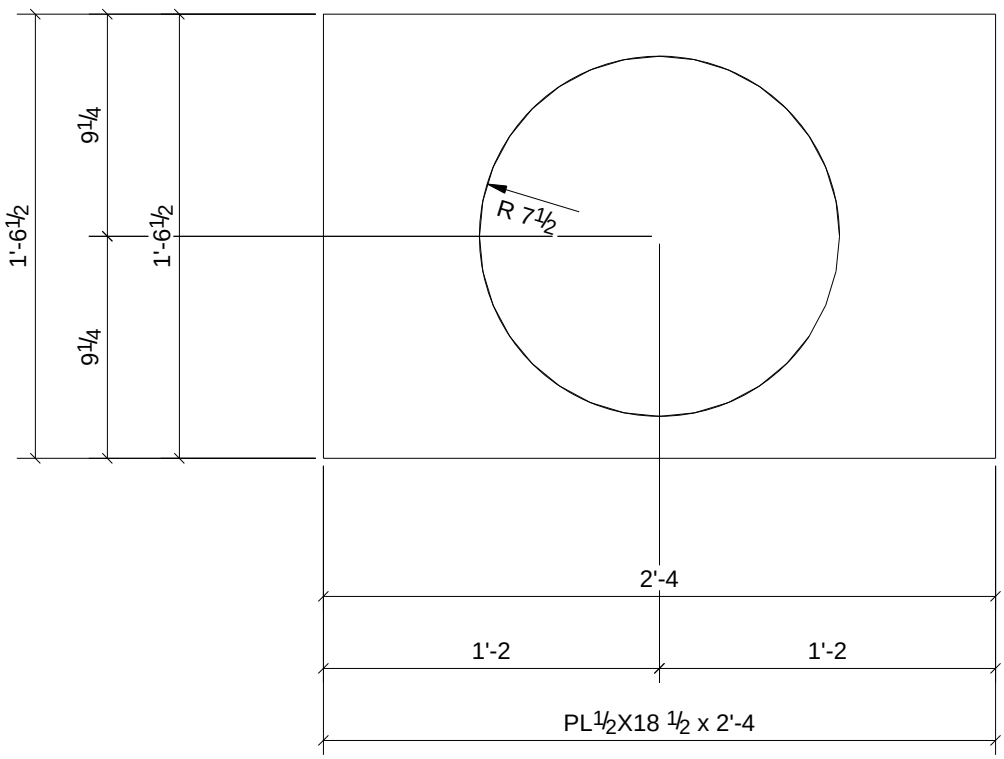

1	B36
1	B55
2	B66
1	B98
Qty.	In Assembly

Qty.	Mark	Size	Length	Comments	Grade
5	p3	PL1/2"X18 1/2"	2'-4"		A36

PROJECT NAME
OLDE ORCHARD ELEMENTARY SCHOOL
LOCATION
800 McNAUGHTEN RD. COLUMBUS, OHIO 43213
CUSTOMER
THOMAS AND MARKER CONSTRUCTION
ARCHITECT
BRAUN & STEIDL

NORTH CENTRAL FABRICATION
Mansfield, OH 44906
419-529-2744 FAX 419-529-5387 http://www.northcentralfabri

AISC CERTIFIED FABRICATOR

DESCRIPTION	DATE	DATE	JOB No.
PLATE	05/23/2011		70234
	DRAWN BY TMc	DRAWN BY TAN	DRG No. p3

MATERIAL NOTE:
W-SHAPES, CHANNELS: ASTM A992
ANGLES, S-SHAPES: ASTM A36
PLATE AND BAR: ASTM A36
PIPE: ASTM A53, GRADE B
HSS: ASTM A500, GRADE B

PROCESS CONTROL
PROCESS BY
FAB: _____
FIT AND WELD: _____
INSPECTION: _____
OTHER (IF NEEDED) _____
_____ : _____
_____ : _____
_____ : _____
_____ : _____
REFERENCE LATEST ERECTION DRAWINGS FOR MATERIAL & FABRICATION INFORMATION

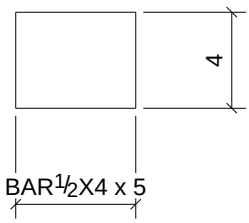

2	C1
2	C2
1	C5
2	C6
5	C7
4	C10
1	C14
Qty.	In Assembly

Qty.	Mark	Size	Length	Comments	Grade
17	p7	BAR1/2"X4"	0'-5"		A36

PROJECT NAME
OLDE ORCHARD ELEMENTARY SCHOOL

LOCATION
800 McNAUGHTEN RD. COLUMBUS, OHIO 43213

CUSTOMER
THOMAS AND MARKER CONSTRUCTION

ARCHITECT
BRAUN & STEIDL

NORTH CENTRAL FABRICATION
Mansfield, OH 44906
419-529-2744 FAX 419-529-5387 http://www.northcentralfabri

AISC CERTIFIED FABRICATOR

DESCRIPTION
PLATE

DATE	DATE	JOB No.
05/23/2011		70234
DRAWN BY	DRAWN BY	DRG No.
TMc	TAN	p7

MATERIAL NOTE:
W-SHAPES, CHANNELS: ASTM A992
ANGLES, S-SHAPES: ASTM A36
PLATE AND BAR: ASTM A36
PIPE: ASTM A53, GRADE B
HSS: ASTM A500, GRADE B

PROCESS CONTROL
PROCESS BY
FAB: _____
FIT AND WELD: _____
INSPECTION: _____
OTHER (IF NEEDED)
_____ : _____
_____ : _____
_____ : _____
_____ : _____
REFERENCE LATEST ERECTION DRAWINGS FOR MATERIAL & FABRICATION INFORMATION

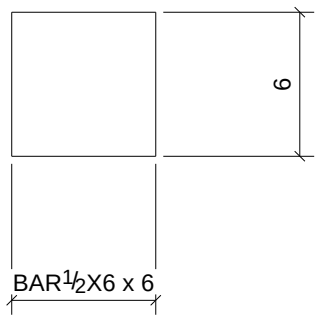

1	C8
2	C9
1	C11
1	C26
Qty.	In Assembly

Qty.	Mark	Size	Length	Comments	Grade
5	p8	BAR1/2"X6"	0'-6"		A36

PROJECT NAME
OLDE ORCHARD ELEMENTARY SCHOOL

LOCATION
800 McNAUGHTEN RD. COLUMBUS, OHIO 43213

CUSTOMER
THOMAS AND MARKER CONSTRUCTION

ARCHITECT
BRAUN & STEIDL

NORTH CENTRAL FABRICATION
Mansfield, OH 44906
419-529-2744 FAX 419-529-5387 http://www.northcentralfabri

AISC CERTIFIED FABRICATOR

DESCRIPTION	DATE	DATE	JOB No.
PLATE	05/23/2011		70234
	DRAWN BY TMc	DRAWN BY TAN	DRG No. p8

MATERIAL NOTE:
W-SHAPES, CHANNELS: ASTM A992
ANGLES, S-SHAPES: ASTM A36
PLATE AND BAR: ASTM A36
PIPE: ASTM A53, GRADE B
HSS: ASTM A500, GRADE B

PROCESS CONTROL
PROCESS BY
FAB: _____
FIT AND WELD: _____
INSPECTION: _____
OTHER (IF NEEDED)
_____ : _____
_____ : _____
_____ : _____
_____ : _____
REFERENCE LATEST ERECTION DRAWINGS FOR MATERIAL & FABRICATION INFORMATION

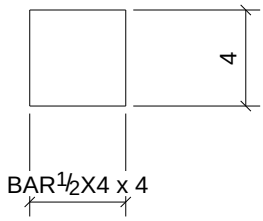

Qty.	In Assembly
1	C12
1	C13
2	C15
1	C17
1	C19
1	C23
1	C27
1	C28
1	C47
1	C48
1	C49
1	C50

Qty.	Mark	Size	Length	Comments	Grade
13	p9	BAR1/2"X4"	0'-4"		A36

PROJECT NAME
OLDE ORCHARD ELEMENTARY SCHOOL

LOCATION
800 McNAUGHTEN RD. COLUMBUS, OHIO 43213

CUSTOMER
THOMAS AND MARKER CONSTRUCTION

ARCHITECT
BRAUN & STEIDL

NORTH CENTRAL FABRICATION
Mansfield, OH 44906
419-529-2744 FAX 419-529-5387 http://www.northcentralfabri

AISC CERTIFIED FABRICATOR

DESCRIPTION	DATE	DATE	JOB No.
PLATE	05/23/2011		70234
	DRAWN BY TMc	DRAWN BY TAN	DRG No. p9

MATERIAL NOTE:
W-SHAPES, CHANNELS: ASTM A992
ANGLES, S-SHAPES: ASTM A36
PLATE AND BAR: ASTM A36
PIPE: ASTM A53, GRADE B
HSS: ASTM A500, GRADE B

PROCESS CONTROL
PROCESS BY
FAB: _____
FIT AND WELD: _____
INSPECTION: _____
OTHER (IF NEEDED) _____
_____ : _____
_____ : _____
_____ : _____
_____ : _____
REFERENCE LATEST ERECTION DRAWINGS FOR MATERIAL & FABRICATION INFORMATION

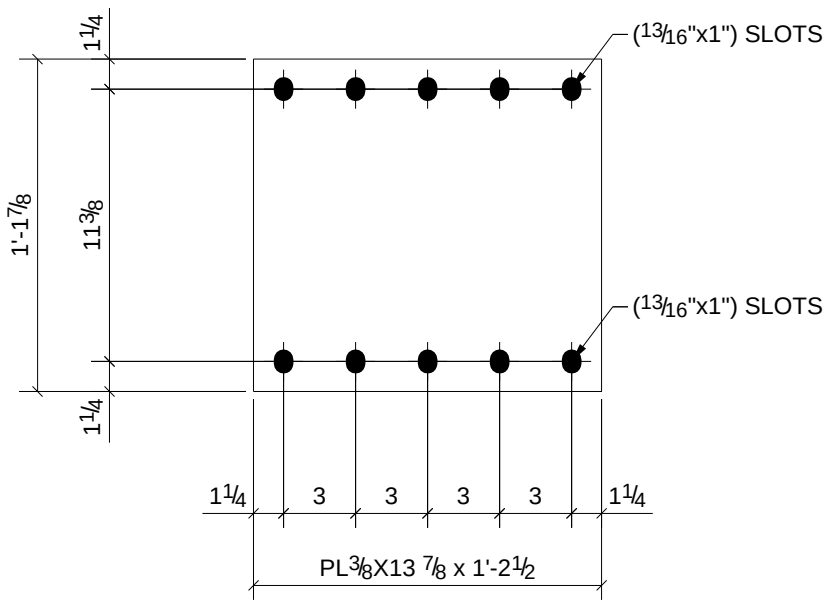

1	C25
Qty.	In Assembly

Qty.	Mark	Size	Length	Comments	Grade
1	p11	PL3/8"X13 7/8"	1'-2 1/2"		A992

PROJECT NAME
OLDE ORCHARD ELEMENTARY SCHOOL

LOCATION
800 McNAUGHTEN RD. COLUMBUS, OHIO 43213

CUSTOMER
THOMAS AND MARKER CONSTRUCTION

ARCHITECT
BRAUN & STEIDL

NORTH CENTRAL FABRICATION
Mansfield, OH 44906
419-529-2744 FAX 419-529-5387 http://www.northcentralfabri

AISC CERTIFIED FABRICATOR

DESCRIPTION
PLATE

DATE	DATE	JOB No.
05/23/2011		70234
DRAWN BY	DRAWN BY	DRG No.
TMc	TAN	p11

MATERIAL NOTE:
W-SHAPES, CHANNELS: ASTM A992
ANGLES, S-SHAPES: ASTM A36
PLATE AND BAR: ASTM A36
PIPE: ASTM A53, GRADE B
HSS: ASTM A500, GRADE B

PROCESS CONTROL
PROCESS BY
FAB: _____
FIT AND WELD: _____
INSPECTION: _____
OTHER (IF NEEDED) _____
_____ : _____
_____ : _____
_____ : _____
_____ : _____
REFERENCE LATEST ERECTION DRAWINGS FOR MATERIAL & FABRICATION INFORMATION

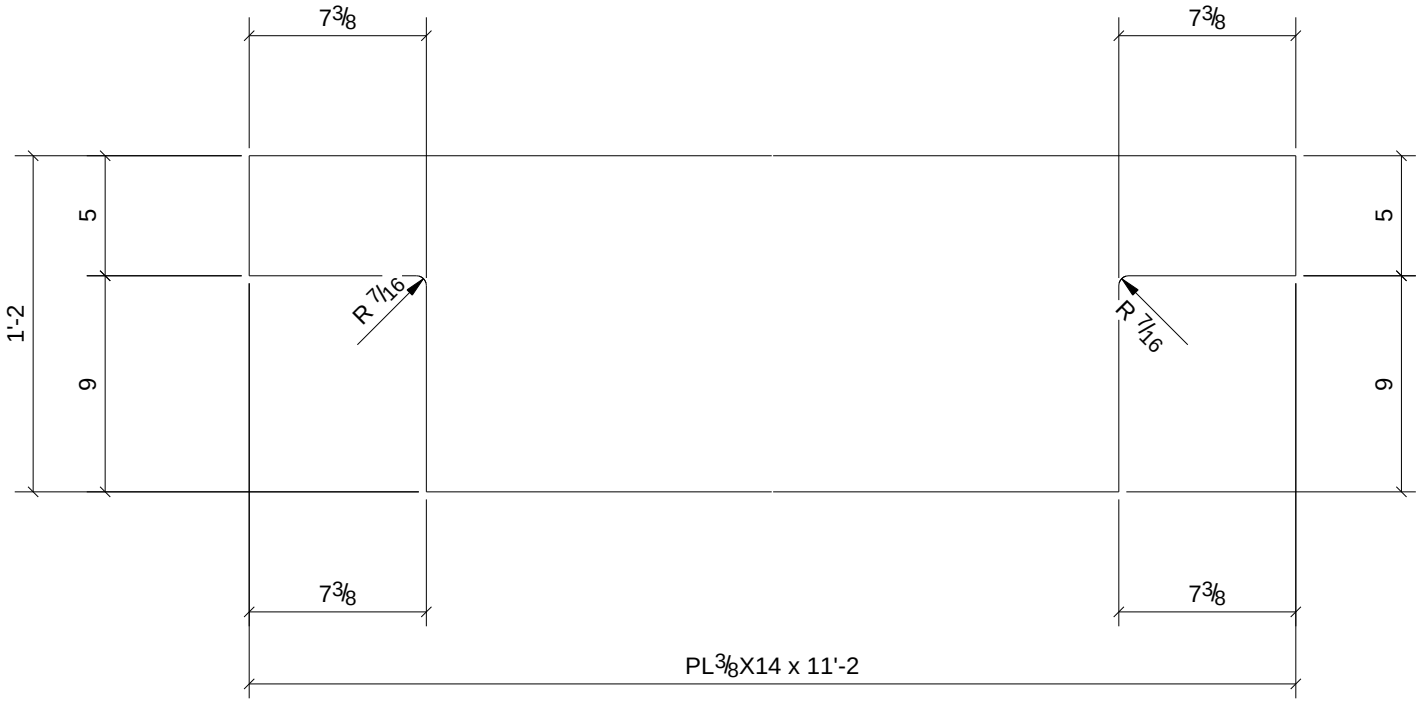

2	L39
Qty.	In Assembly

Qty.	Mark	Size	Length	Comments	Grade
2	p12	PL3/8"X14"	11'-2"		A36

PROJECT NAME
OLDE ORCHARD ELEMENTARY SCHOOL

LOCATION
800 McNAUGHTEN RD. COLUMBUS, OHIO 43213

CUSTOMER
THOMAS AND MARKER CONSTRUCTION

ARCHITECT
BRAUN & STEIDL

NORTH CENTRAL FABRICATION
Mansfield, OH 44906
419-529-2744 FAX 419-529-5387 http://www.northcentralfabri

AISC CERTIFIED FABRICATOR

DESCRIPTION	DATE	DATE	JOB No.
PLATE	05/23/2011		70234
	DRAWN BY TMc	DRAWN BY TAN	DRG No. p12

MATERIAL NOTE:
W-SHAPES, CHANNELS: ASTM A992
ANGLES, S-SHAPES: ASTM A36
PLATE AND BAR: ASTM A36
PIPE: ASTM A53, GRADE B
HSS: ASTM A500, GRADE B

PROCESS CONTROL
PROCESS BY
FAB: _____
FIT AND WELD: _____
INSPECTION: _____
OTHER (IF NEEDED) _____
_____ : _____
_____ : _____
_____ : _____
_____ : _____
REFERENCE LATEST ERECTION DRAWINGS FOR MATERIAL & FABRICATION INFORMATION

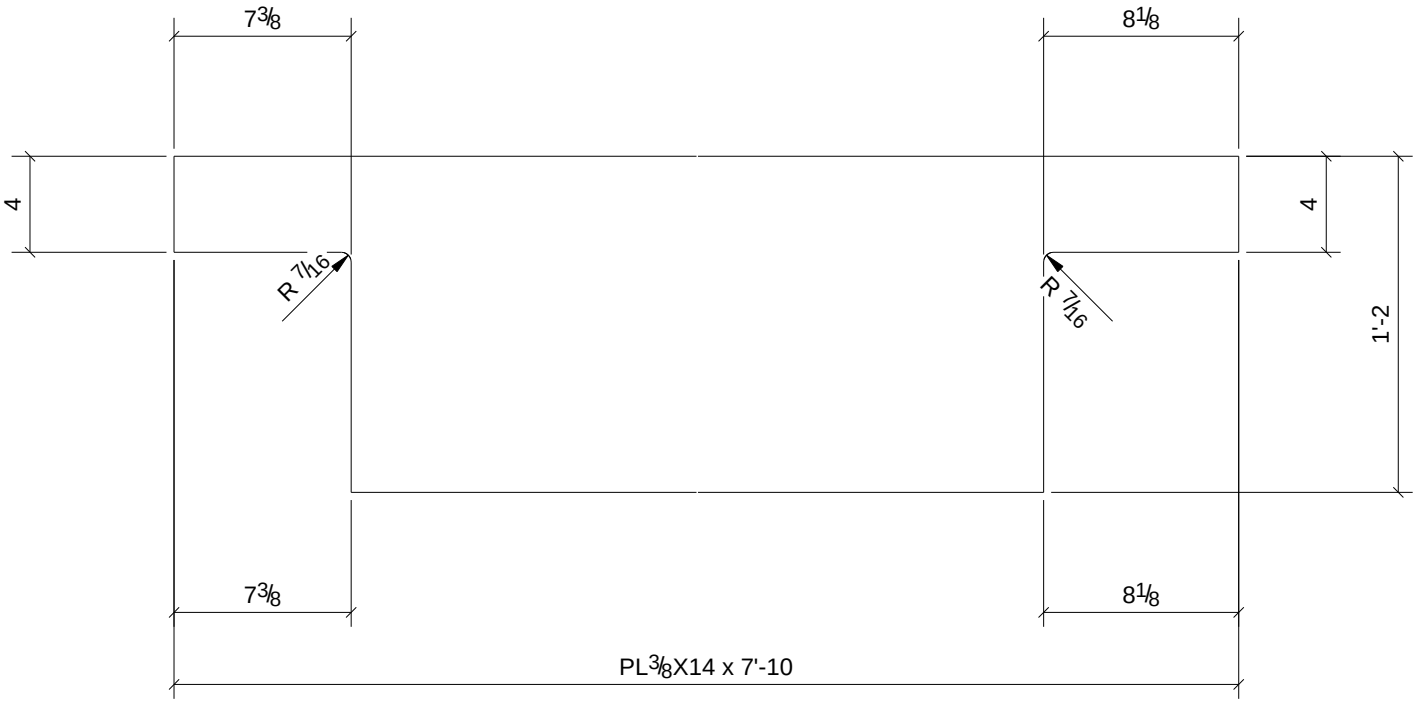

Qty.	In Assembly
2	L38

Qty.	Mark	Size	Length	Comments	Grade
2	p13	PL3/8"X14"	7'-10"		A36

PROJECT NAME
OLDE ORCHARD ELEMENTARY SCHOOL

LOCATION
800 McNAUGHTEN RD. COLUMBUS, OHIO 43213

CUSTOMER
THOMAS AND MARKER CONSTRUCTION

ARCHITECT
BRAUN & STEIDL

NORTH CENTRAL FABRICATION
Mansfield, OH 44906
419-529-2744 FAX 419-529-5387 http://www.northcentralfabri

AISC CERTIFIED FABRICATOR

DESCRIPTION
PLATE

DATE	DATE	JOB No.
05/23/2011		70234
DRAWN BY	DRAWN BY	DRG No.
TMc	TAN	p13

MATERIAL NOTE:
W-SHAPES, CHANNELS: ASTM A992
ANGLES, S-SHAPES: ASTM A36
PLATE AND BAR: ASTM A36
PIPE: ASTM A53, GRADE B
HSS: ASTM A500, GRADE B

PROCESS CONTROL
PROCESS BY
FAB: _____
FIT AND WELD: _____
INSPECTION: _____
OTHER (IF NEEDED)
_____ : _____
_____ : _____
_____ : _____
_____ : _____
REFERENCE LATEST ERECTION DRAWINGS FOR MATERIAL & FABRICATION INFORMATION

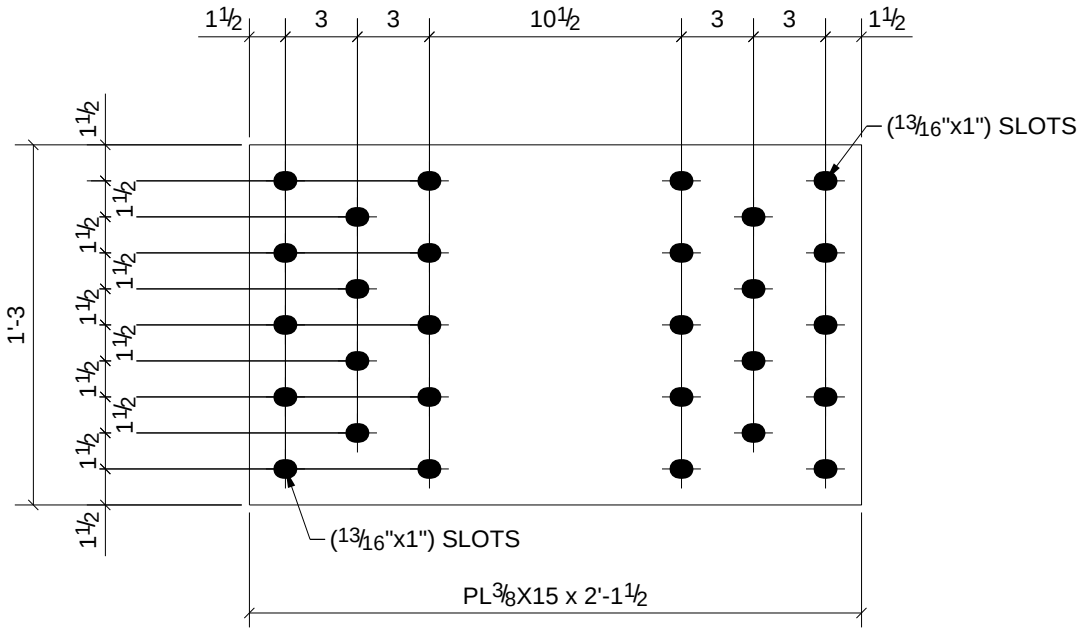

1	C11
Qty.	In Assembly

Qty.	Mark	Size	Length	Comments	Grade
1	p14	PL3/8"X15"	2'-1 1/2"		A36

PROJECT NAME
OLDE ORCHARD ELEMENTARY SCHOOL

LOCATION
800 McNAUGHTEN RD. COLUMBUS, OHIO 43213

CUSTOMER
THOMAS AND MARKER CONSTRUCTION

ARCHITECT
BRAUN & STEIDL

NORTH CENTRAL FABRICATION
Mansfield, OH 44906
419-529-2744 FAX 419-529-5387 http://www.northcentralfabri

AISC CERTIFIED FABRICATOR

DESCRIPTION
PLATE

DATE	DATE	JOB No.
05/23/2011		70234
DRAWN BY	DRAWN BY	DRG No.
TMc	TAN	p14

MATERIAL NOTE:
W-SHAPES, CHANNELS: ASTM A992
ANGLES, S-SHAPES: ASTM A36
PLATE AND BAR: ASTM A36
PIPE: ASTM A53, GRADE B
HSS: ASTM A500, GRADE B

PROCESS CONTROL
PROCESS BY
FAB: _____
FIT AND WELD: _____
INSPECTION: _____
OTHER (IF NEEDED) _____
_____ : _____
_____ : _____
_____ : _____
_____ : _____
REFERENCE LATEST ERECTION DRAWINGS FOR MATERIAL & FABRICATION INFORMATION

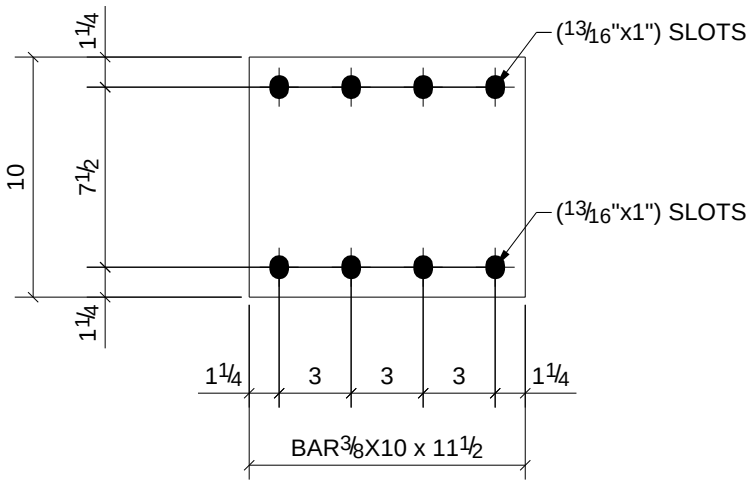

1	C14
Qty.	In Assembly

Qty.	Mark	Size	Length	Comments	Grade
1	p15	BAR3/8"X10"	0'-11 1/2"		A992

PROJECT NAME
OLDE ORCHARD ELEMENTARY SCHOOL

LOCATION
800 McNAUGHTEN RD. COLUMBUS, OHIO 43213

CUSTOMER
THOMAS AND MARKER CONSTRUCTION

ARCHITECT
BRAUN & STEIDL

NORTH CENTRAL FABRICATION
Mansfield, OH 44906
419-529-2744 FAX 419-529-5387 http://www.northcentralfabri

AISC CERTIFIED FABRICATOR

DESCRIPTION	DATE	DATE	JOB No.
PLATE	05/23/2011		70234
	DRAWN BY TMc	DRAWN BY TAN	DRG No. p15

MATERIAL NOTE:
W-SHAPES, CHANNELS: ASTM A992
ANGLES, S-SHAPES: ASTM A36
PLATE AND BAR: ASTM A36
PIPE: ASTM A53, GRADE B
HSS: ASTM A500, GRADE B

PROCESS CONTROL
PROCESS BY
FAB: _____
FIT AND WELD: _____
INSPECTION: _____
OTHER (IF NEEDED) _____
_____ : _____
_____ : _____
_____ : _____
_____ : _____
REFERENCE LATEST ERECTION DRAWINGS FOR MATERIAL & FABRICATION INFORMATION

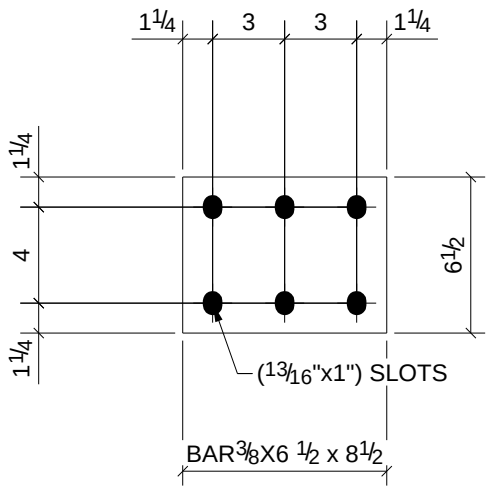

1	B29
Qty.	In Assembly

Qty.	Mark	Size	Length	Comments	Grade
1	p16	BAR3/8"X6 1/2"	0'-8 1/2"		A36

PROJECT NAME
OLDE ORCHARD ELEMENTARY SCHOOL

LOCATION
800 McNAUGHTEN RD. COLUMBUS, OHIO 43213

CUSTOMER
THOMAS AND MARKER CONSTRUCTION

ARCHITECT
BRAUN & STEIDL

NORTH CENTRAL FABRICATION
Mansfield, OH 44906
419-529-2744 FAX 419-529-5387 http://www.northcentralfabri

AISC CERTIFIED FABRICATOR

DESCRIPTION	DATE	DATE	JOB No.
PLATE	05/23/2011		70234
	DRAWN BY TMc	DRAWN BY TAN	DRG No. p16

MATERIAL NOTE:
W-SHAPES, CHANNELS: ASTM A992
ANGLES, S-SHAPES: ASTM A36
PLATE AND BAR: ASTM A36
PIPE: ASTM A53, GRADE B
HSS: ASTM A500, GRADE B

PROCESS CONTROL
PROCESS BY
FAB: _____
FIT AND WELD: _____
INSPECTION: _____
OTHER (IF NEEDED) _____
_____ : _____
_____ : _____
_____ : _____
_____ : _____
REFERENCE LATEST ERECTION DRAWINGS FOR MATERIAL & FABRICATION INFORMATION

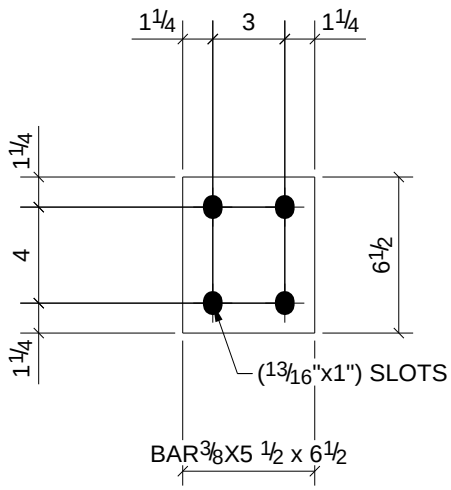

1	B30
Qty.	In Assembly

Qty.	Mark	Size	Length	Comments	Grade
1	p17	BAR3/8"X5 1/2"	0'-6 1/2"		A36

PROJECT NAME
OLDE ORCHARD ELEMENTARY SCHOOL

LOCATION
800 McNAUGHTEN RD. COLUMBUS, OHIO 43213

CUSTOMER
THOMAS AND MARKER CONSTRUCTION

ARCHITECT
BRAUN & STEIDL

NORTH CENTRAL FABRICATION
Mansfield, OH 44906
419-529-2744 FAX 419-529-5387 http://www.northcentralfabri

AISC CERTIFIED FABRICATOR

DESCRIPTION
PLATE

DATE	DATE	JOB No.
05/23/2011		70234
DRAWN BY	DRAWN BY	DRG No.
TMc	TAN	p17

MATERIAL NOTE:
W-SHAPES, CHANNELS: ASTM A992
ANGLES, S-SHAPES: ASTM A36
PLATE AND BAR: ASTM A36
PIPE: ASTM A53, GRADE B
HSS: ASTM A500, GRADE B

PROCESS CONTROL
PROCESS BY
FAB: _____
FIT AND WELD: _____
INSPECTION: _____
OTHER (IF NEEDED) _____
_____ : _____
_____ : _____
_____ : _____
_____ : _____
REFERENCE LATEST ERECTION DRAWINGS FOR MATERIAL & FABRICATION INFORMATION

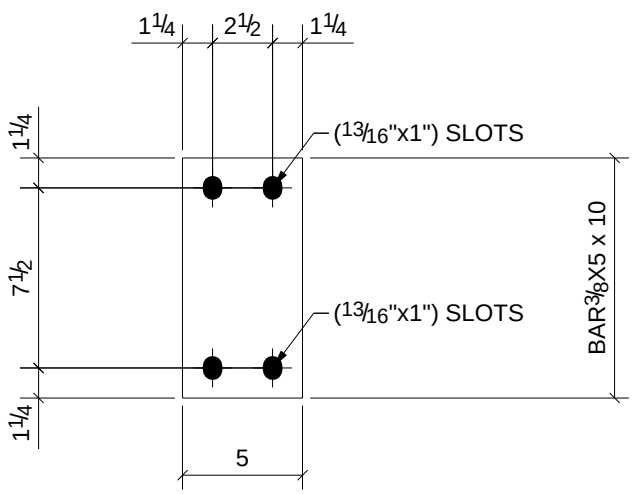

1	C5
4	C10
2	C15
1	C23
1	C27
2	C28
2	C47
1	C50
Qty.	In Assembly

Qty.	Mark	Size	Length	Comments	Grade
14	p18	BAR3/8"X5"	0'-10"		A992

PROJECT NAME
OLDE ORCHARD ELEMENTARY SCHOOL

LOCATION
800 McNAUGHTEN RD. COLUMBUS, OHIO 43213

CUSTOMER
THOMAS AND MARKER CONSTRUCTION

ARCHITECT
BRAUN & STEIDL

NORTH CENTRAL FABRICATION
Mansfield, OH 44906
419-529-2744 FAX 419-529-5387 http://www.northcentralfabri

AISC CERTIFIED FABRICATOR

DESCRIPTION	DATE	DATE	JOB No.
PLATE	05/23/2011		70234
	DRAWN BY TMc	DRAWN BY TAN	DRG No. p18

MATERIAL NOTE:
W-SHAPES, CHANNELS: ASTM A992
ANGLES, S-SHAPES: ASTM A36
PLATE AND BAR: ASTM A36
PIPE: ASTM A53, GRADE B
HSS: ASTM A500, GRADE B

PROCESS CONTROL
PROCESS BY
FAB: _____
FIT AND WELD: _____
INSPECTION: _____
OTHER (IF NEEDED) _____
_____ : _____
_____ : _____
_____ : _____
_____ : _____
REFERENCE LATEST ERECTION DRAWINGS FOR MATERIAL & FABRICATION INFORMATION

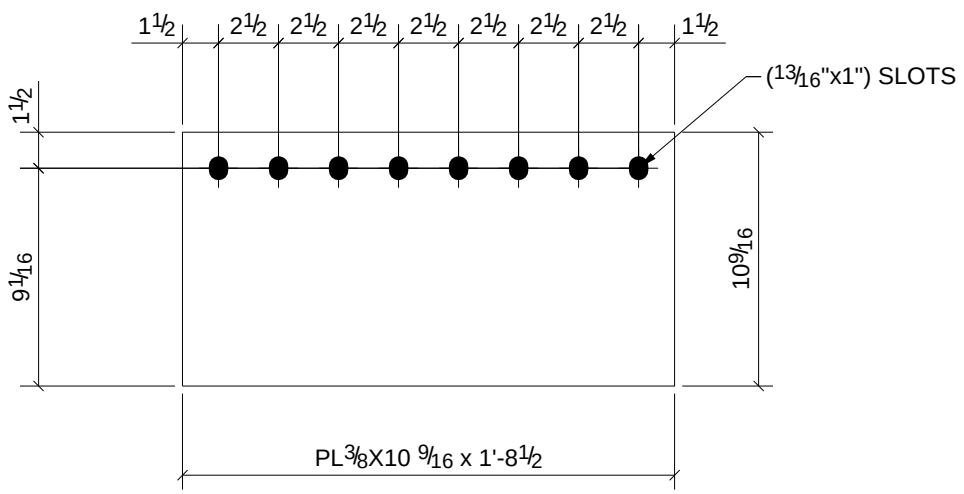

1	C8
2	C9
1	C11
Qty.	In Assembly

Qty.	Mark	Size	Length	Comments	Grade
4	p19	PL3/8"X10 9/16"	1'-8 1/2"		A36

PROJECT NAME
OLDE ORCHARD ELEMENTARY SCHOOL

LOCATION
800 McNAUGHTEN RD. COLUMBUS, OHIO 43213

CUSTOMER
THOMAS AND MARKER CONSTRUCTION

ARCHITECT
BRAUN & STEIDL

NORTH CENTRAL FABRICATION
Mansfield, OH 44906
419-529-2744 FAX 419-529-5387 http://www.northcentralfabri

AISC CERTIFIED FABRICATOR

DESCRIPTION
PLATE

DATE	DATE	JOB No.
05/23/2011		70234
DRAWN BY	DRAWN BY	DRG No.
TMc	TAN	p19

MATERIAL NOTE:
W-SHAPES, CHANNELS: ASTM A992
ANGLES, S-SHAPES: ASTM A36
PLATE AND BAR: ASTM A36
PIPE: ASTM A53, GRADE B
HSS: ASTM A500, GRADE B

PROCESS CONTROL
PROCESS BY
FAB: _____
FIT AND WELD: _____
INSPECTION: _____
OTHER (IF NEEDED) _____
_____ : _____
_____ : _____
_____ : _____
_____ : _____
REFERENCE LATEST ERECTION DRAWINGS FOR MATERIAL & FABRICATION INFORMATION

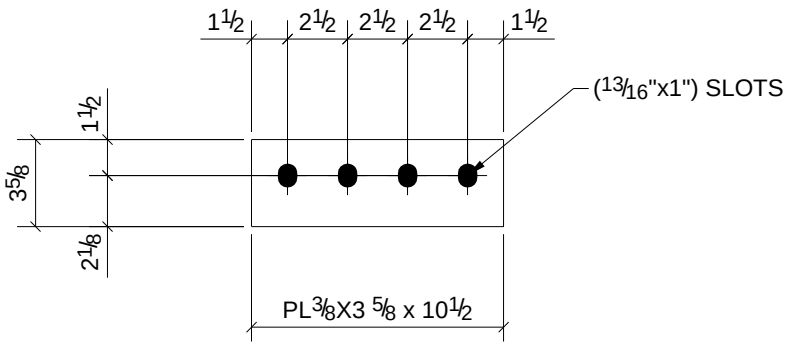

2	B46
4	B61
1	B76
Qty.	In Assembly

Qty.	Mark	Size	Length	Comments	Grade
7	p20	PL3/8"X3 5/8"	0'-10 1/2"		A36

PROJECT NAME
OLDE ORCHARD ELEMENTARY SCHOOL

LOCATION
800 McNAUGHTEN RD. COLUMBUS, OHIO 43213

CUSTOMER
THOMAS AND MARKER CONSTRUCTION

ARCHITECT
BRAUN & STEIDL

NORTH CENTRAL FABRICATION
Mansfield, OH 44906
419-529-2744 FAX 419-529-5387 http://www.northcentralfabri

AISC CERTIFIED FABRICATOR

DESCRIPTION
PLATE

DATE	DATE	JOB No.
05/23/2011		70234
DRAWN BY	DRAWN BY	DRG No.
TMc	TAN	p20

MATERIAL NOTE:
W-SHAPES, CHANNELS: ASTM A992
ANGLES, S-SHAPES: ASTM A36
PLATE AND BAR: ASTM A36
PIPE: ASTM A53, GRADE B
HSS: ASTM A500, GRADE B

PROCESS CONTROL
PROCESS BY
FAB: _____
FIT AND WELD: _____
INSPECTION: _____
OTHER (IF NEEDED) _____
_____ : _____
_____ : _____
_____ : _____
_____ : _____
REFERENCE LATEST ERECTION DRAWINGS FOR MATERIAL & FABRICATION INFORMATION

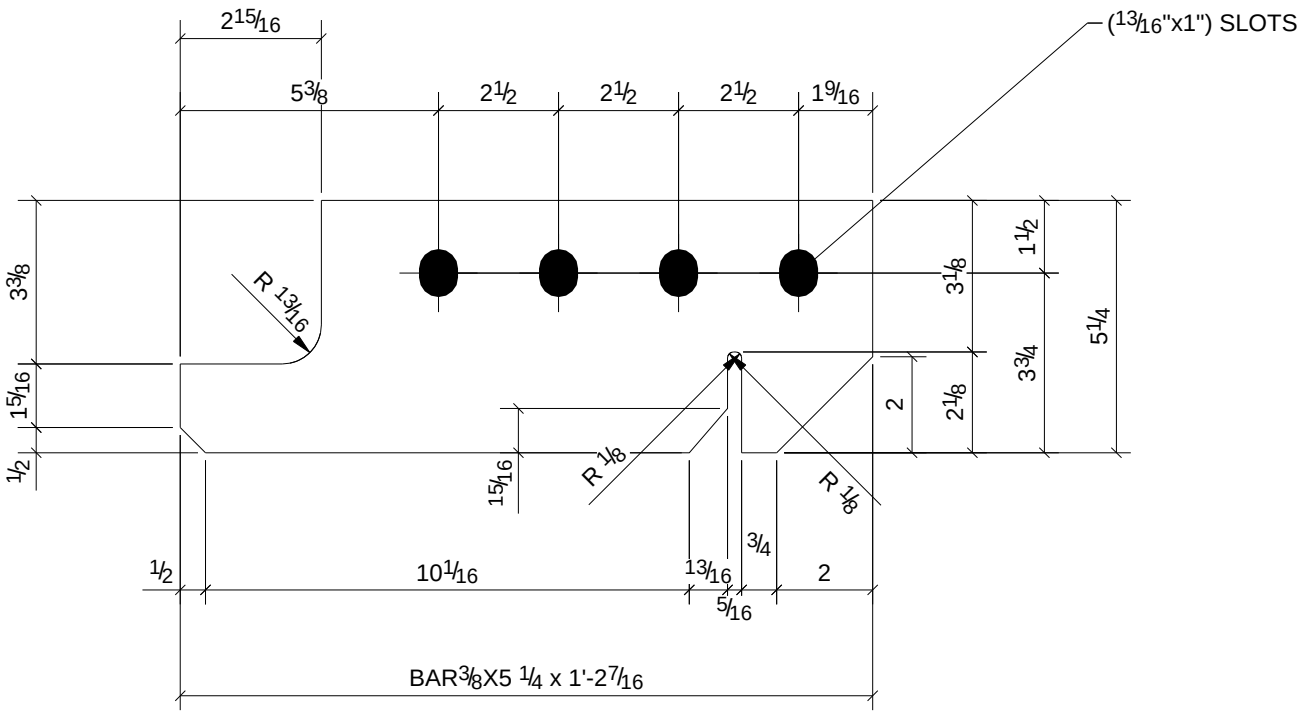

1	B21
Qty.	In Assembly

Qty.	Mark	Size	Length	Comments	Grade
1	p21	BAR3/8"X5 1/4"	1'-2 7/16"		A36

PROJECT NAME
OLDE ORCHARD ELEMENTARY SCHOOL

LOCATION
800 McNAUGHTEN RD. COLUMBUS, OHIO 43213

CUSTOMER
THOMAS AND MARKER CONSTRUCTION

ARCHITECT
BRAUN & STEIDL

NORTH CENTRAL FABRICATION
Mansfield, OH 44906
419-529-2744 FAX 419-529-5387 http://www.northcentralfabri

AISC CERTIFIED FABRICATOR

DESCRIPTION
PLATE

DATE	DATE	JOB No.
05/23/2011		70234
DRAWN BY	DRAWN BY	DRG No.
TMc	TAN	p21

MATERIAL NOTE:
W-SHAPES, CHANNELS: ASTM A992
ANGLES, S-SHAPES: ASTM A36
PLATE AND BAR: ASTM A36
PIPE: ASTM A53, GRADE B
HSS: ASTM A500, GRADE B

PROCESS CONTROL
PROCESS BY
FAB: _____
FIT AND WELD: _____
INSPECTION: _____
OTHER (IF NEEDED) _____
_____ : _____
_____ : _____
_____ : _____
_____ : _____
REFERENCE LATEST ERECTION DRAWINGS FOR MATERIAL & FABRICATION INFORMATION

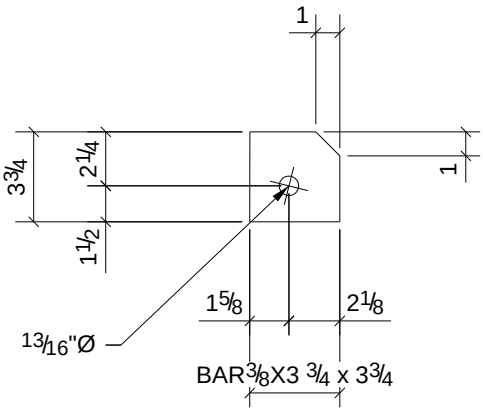

2	A3
3	A14
2	A39
2	A44
3	A52
2	A54
3	A58
2	A72
3	A88
2	A89
Qty.	In Assembly

Qty.	Mark	Size	Length	Comments	Grade
24	p22	BAR3/8"X3 3/4"	0'-3 3/4"		A36

PROJECT NAME
OLDE ORCHARD ELEMENTARY SCHOOL

LOCATION
800 McNAUGHTEN RD. COLUMBUS, OHIO 43213

CUSTOMER
THOMAS AND MARKER CONSTRUCTION

ARCHITECT
BRAUN & STEIDL

NORTH CENTRAL FABRICATION
Mansfield, OH 44906
419-529-2744 FAX 419-529-5387 http://www.northcentralfabri

AISC CERTIFIED FABRICATOR

DESCRIPTION
PLATE

DATE	DATE	JOB No.
05/23/2011		70234
DRAWN BY	DRAWN BY	DRG No.
TMc	TAN	p22

MATERIAL NOTE:
W-SHAPES, CHANNELS: ASTM A992
ANGLES, S-SHAPES: ASTM A36
PLATE AND BAR: ASTM A36
PIPE: ASTM A53, GRADE B
HSS: ASTM A500, GRADE B

PROCESS CONTROL
PROCESS BY
FAB: _____
FIT AND WELD: _____
INSPECTION: _____
OTHER (IF NEEDED) _____
_____ : _____
_____ : _____
_____ : _____
_____ : _____
REFERENCE LATEST ERECTION DRAWINGS FOR MATERIAL & FABRICATION INFORMATION

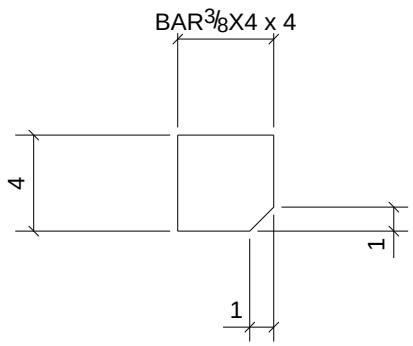

4	B39
5	B54
5	B68
5	B81
5	B97
Qty.	In Assembly

Qty.	Mark	Size	Length	Comments	Grade
24	p23	BAR3/8"X4"	0'-4"		A36

PROJECT NAME
OLDE ORCHARD ELEMENTARY SCHOOL
LOCATION
800 McNAUGHTEN RD. COLUMBUS, OHIO 43213
CUSTOMER
THOMAS AND MARKER CONSTRUCTION
ARCHITECT
BRAUN & STEIDL

NORTH CENTRAL FABRICATION
Mansfield, OH 44906
419-529-2744 FAX 419-529-5387 http://www.northcentralfabri

AISC CERTIFIED FABRICATOR

DESCRIPTION	DATE	DATE	JOB No.
PLATE	05/23/2011		70234
	DRAWN BY TMc	DRAWN BY TAN	DRG No. p23

MATERIAL NOTE:
W-SHAPES, CHANNELS: ASTM A992
ANGLES, S-SHAPES: ASTM A36
PLATE AND BAR: ASTM A36
PIPE: ASTM A53, GRADE B
HSS: ASTM A500, GRADE B

PROCESS CONTROL
PROCESS BY
FAB: _____
FIT AND WELD: _____
INSPECTION: _____
OTHER (IF NEEDED) _____
_____ : _____
_____ : _____
_____ : _____
_____ : _____
REFERENCE LATEST ERECTION DRAWINGS FOR MATERIAL & FABRICATION INFORMATION

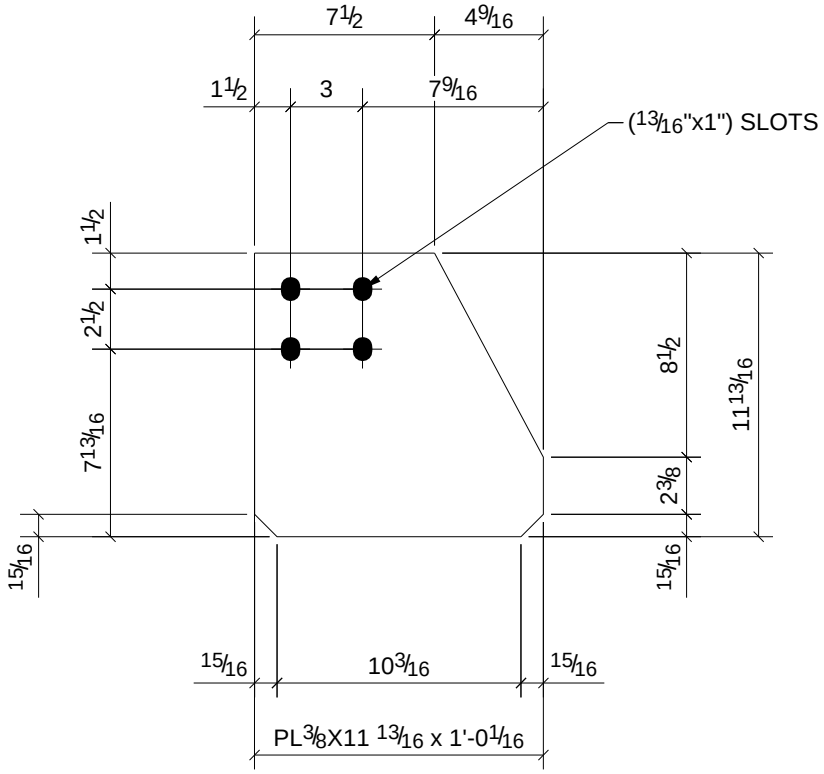

1	B122
Qty.	In Assembly

Qty.	Mark	Size	Length	Comments	Grade
1	p24	PL3/8"X11 13/16"	1'-0 1/16"		A992

PROJECT NAME
OLDE ORCHARD ELEMENTARY SCHOOL

LOCATION
800 McNAUGHTEN RD. COLUMBUS, OHIO 43213

CUSTOMER
THOMAS AND MARKER CONSTRUCTION

ARCHITECT
BRAUN & STEIDL

NORTH CENTRAL FABRICATION
Mansfield, OH 44906
419-529-2744 FAX 419-529-5387 http://www.northcentralfabri

AISC CERTIFIED FABRICATOR

DESCRIPTION
PLATE

DATE	DATE	JOB No.
05/27/2011		70234
DRAWN BY	DRAWN BY	DRG No.
TMc	TAN	p24

MATERIAL NOTE:
W-SHAPES, CHANNELS: ASTM A992
ANGLES, S-SHAPES: ASTM A36
PLATE AND BAR: ASTM A36
PIPE: ASTM A53, GRADE B
HSS: ASTM A500, GRADE B

PROCESS CONTROL
PROCESS BY
FAB: _____
FIT AND WELD: _____
INSPECTION: _____
OTHER (IF NEEDED) _____
_____ : _____
_____ : _____
_____ : _____
_____ : _____
REFERENCE LATEST ERECTION DRAWINGS FOR MATERIAL & FABRICATION INFORMATION

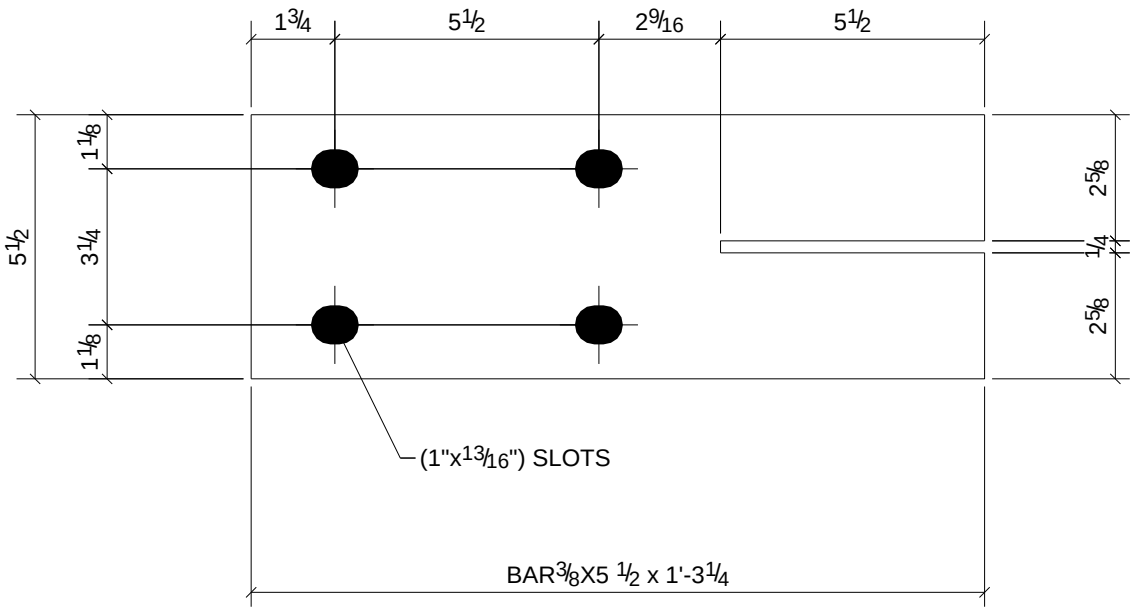

1	B73
Qty.	In Assembly

Qty.	Mark	Size	Length	Comments	Grade
1	p26	BAR3/8"X5 1/2"	1'-3 1/4"		A992

PROJECT NAME
OLDE ORCHARD ELEMENTARY SCHOOL

LOCATION
800 McNAUGHTEN RD. COLUMBUS, OHIO 43213

CUSTOMER
THOMAS AND MARKER CONSTRUCTION

ARCHITECT
BRAUN & STEIDL

NORTH CENTRAL FABRICATION
Mansfield, OH 44906
419-529-2744 FAX 419-529-5387 http://www.northcentralfabri

AISC CERTIFIED FABRICATOR

DESCRIPTION
PLATE

DATE	DATE	JOB No.
05/28/2011		70234
DRAWN BY	DRAWN BY	DRG No.
		p26

MATERIAL NOTE:
W-SHAPES, CHANNELS: ASTM A992
ANGLES, S-SHAPES: ASTM A36
PLATE AND BAR: ASTM A36
PIPE: ASTM A53, GRADE B
HSS: ASTM A500, GRADE B

PROCESS CONTROL
PROCESS BY
FAB: _____
FIT AND WELD: _____
INSPECTION: _____
OTHER (IF NEEDED) _____
_____ : _____
_____ : _____
_____ : _____
_____ : _____
REFERENCE LATEST ERECTION DRAWINGS FOR MATERIAL & FABRICATION INFORMATION

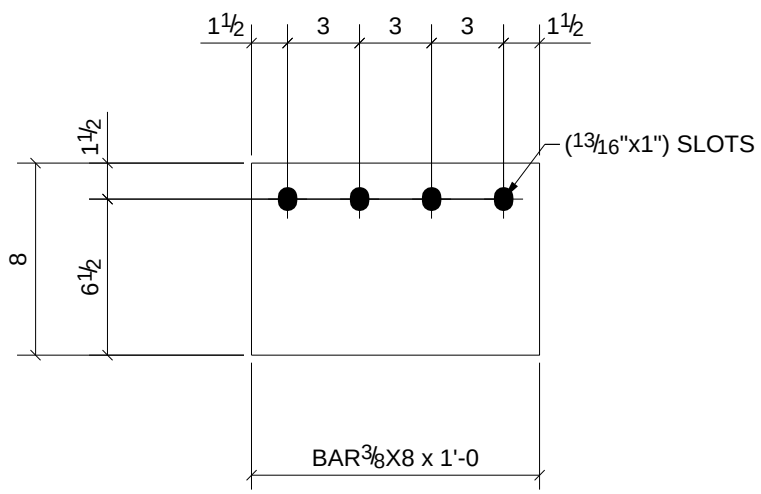

1	C12
1	C19
Qty.	In Assembly

Qty.	Mark	Size	Length	Comments	Grade
2	p27	BAR3/8"X8"	1'-0"		A36

PROJECT NAME
OLDE ORCHARD ELEMENTARY SCHOOL

LOCATION
800 McNAUGHTEN RD. COLUMBUS, OHIO 43213

CUSTOMER
THOMAS AND MARKER CONSTRUCTION

ARCHITECT
BRAUN & STEIDL

NORTH CENTRAL FABRICATION
Mansfield, OH 44906
419-529-2744 FAX 419-529-5387 http://www.northcentralfabri

AISC CERTIFIED FABRICATOR

DESCRIPTION
PLATE

DATE	DATE	JOB No.
05/23/2011		70234
DRAWN BY	DRAWN BY	DRG No.
TMc	TAN	p27

MATERIAL NOTE:
W-SHAPES, CHANNELS: ASTM A992
ANGLES, S-SHAPES: ASTM A36
PLATE AND BAR: ASTM A36
PIPE: ASTM A53, GRADE B
HSS: ASTM A500, GRADE B

PROCESS CONTROL
PROCESS BY
FAB: _____
FIT AND WELD: _____
INSPECTION: _____
OTHER (IF NEEDED) _____
_____ : _____
_____ : _____
_____ : _____
_____ : _____
REFERENCE LATEST ERECTION DRAWINGS FOR MATERIAL & FABRICATION INFORMATION

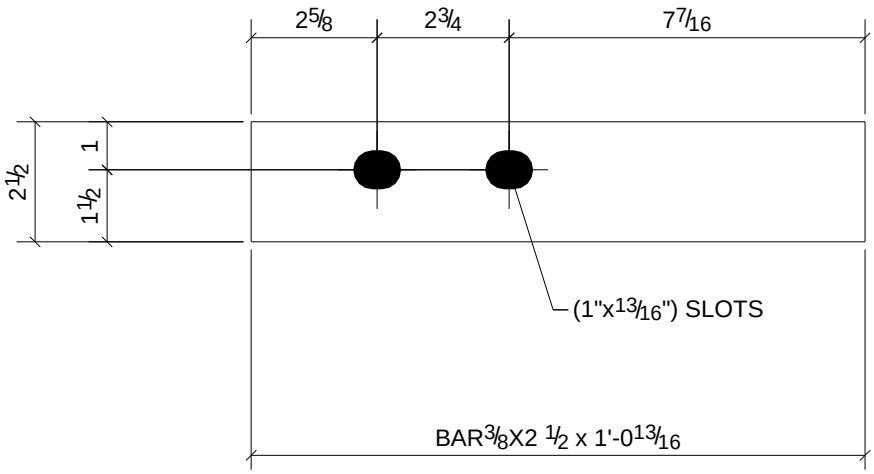

2	B73
Qty.	In Assembly

Qty.	Mark	Size	Length	Comments	Grade
2	p28	BAR3/8"X2 1/2"	1'-0 13/16"		A992

PROJECT NAME
OLDE ORCHARD ELEMENTARY SCHOOL

LOCATION
800 McNAUGHTEN RD. COLUMBUS, OHIO 43213

CUSTOMER
THOMAS AND MARKER CONSTRUCTION

ARCHITECT
BRAUN & STEIDL

NORTH CENTRAL FABRICATION
Mansfield, OH 44906
419-529-2744 FAX 419-529-5387 http://www.northcentralfabri

AISC CERTIFIED FABRICATOR

DESCRIPTION	DATE	DATE	JOB No.
PLATE	05/23/2011		70234
	DRAWN BY TMc	DRAWN BY TAN	DRG No. p28

MATERIAL NOTE:
W-SHAPES, CHANNELS: ASTM A992
ANGLES, S-SHAPES: ASTM A36
PLATE AND BAR: ASTM A36
PIPE: ASTM A53, GRADE B
HSS: ASTM A500, GRADE B

PROCESS CONTROL
PROCESS BY
FAB: _____
FIT AND WELD: _____
INSPECTION: _____
OTHER (IF NEEDED) _____
_____ : _____
_____ : _____
_____ : _____
_____ : _____
REFERENCE LATEST ERECTION DRAWINGS FOR MATERIAL & FABRICATION INFORMATION

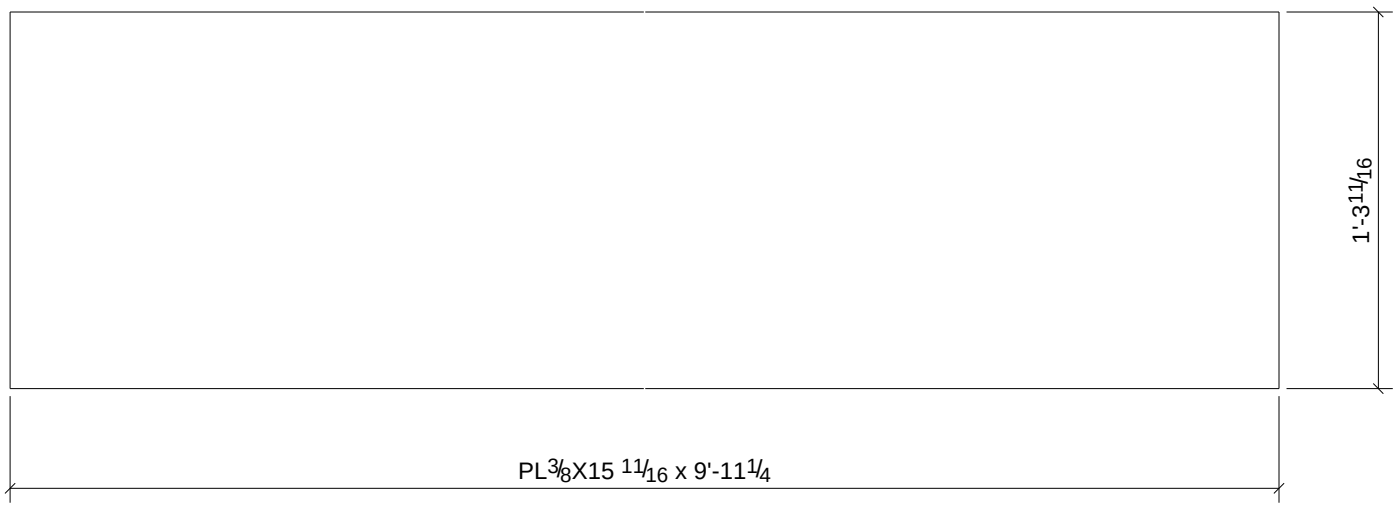

1	L39
Qty.	In Assembly

Qty.	Mark	Size	Length	Comments	Grade
1	p29	PL3/8"X15 11/16"	9'-11 1/4"		A36

PROJECT NAME
OLDE ORCHARD ELEMENTARY SCHOOL

LOCATION
800 McNAUGHTEN RD. COLUMBUS, OHIO 43213

CUSTOMER
THOMAS AND MARKER CONSTRUCTION

ARCHITECT
BRAUN & STEIDL

NORTH CENTRAL FABRICATION
Mansfield, OH 44906
419-529-2744 FAX 419-529-5387 http://www.northcentralfabri

AISC CERTIFIED FABRICATOR

DESCRIPTION
PLATE

DATE	DATE	JOB No.
05/23/2011		70234
DRAWN BY	DRAWN BY	DRG No.
TMc	TAN	p29

MATERIAL NOTE:
W-SHAPES, CHANNELS: ASTM A992
ANGLES, S-SHAPES: ASTM A36
PLATE AND BAR: ASTM A36
PIPE: ASTM A53, GRADE B
HSS: ASTM A500, GRADE B

PROCESS CONTROL
PROCESS BY
FAB: _____
FIT AND WELD: _____
INSPECTION: _____
OTHER (IF NEEDED) _____
_____ : _____
_____ : _____
_____ : _____
_____ : _____
REFERENCE LATEST ERECTION DRAWINGS FOR MATERIAL & FABRICATION INFORMATION

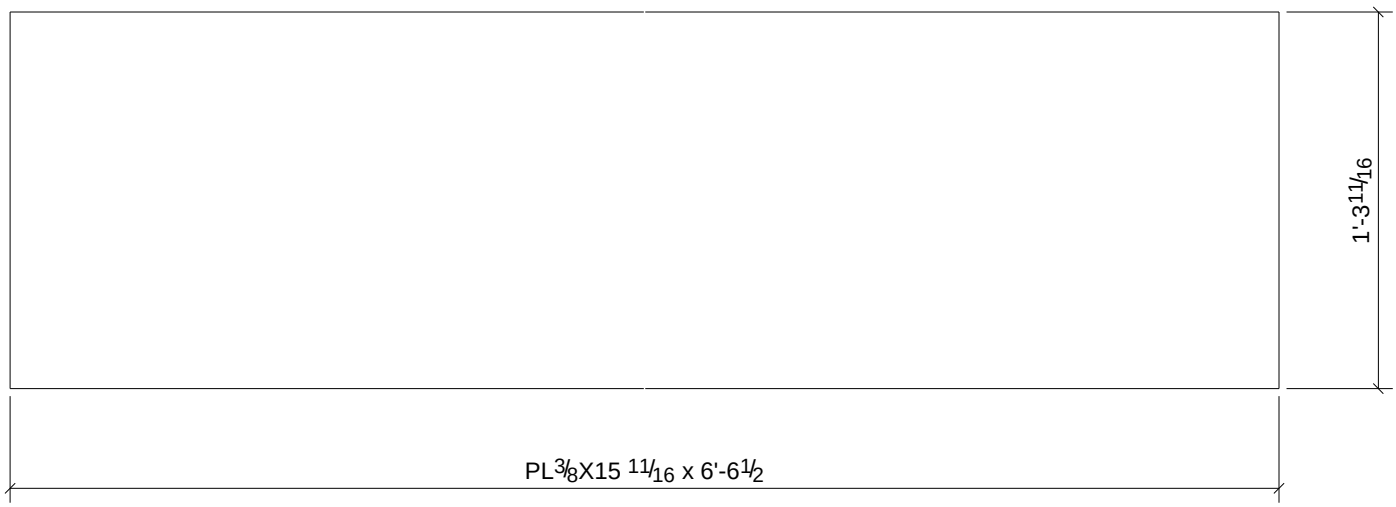

1	L38
Qty.	In Assembly

Qty.	Mark	Size	Length	Comments	Grade
1	p36	PL3/8"X15 11/16"	6'-6 1/2"		A36

PROJECT NAME
OLDE ORCHARD ELEMENTARY SCHOOL

LOCATION
800 McNAUGHTEN RD. COLUMBUS, OHIO 43213

CUSTOMER
THOMAS AND MARKER CONSTRUCTION

ARCHITECT
BRAUN & STEIDL

NORTH CENTRAL FABRICATION
Mansfield, OH 44906
419-529-2744 FAX 419-529-5387 http://www.northcentralfabri

AISC CERTIFIED FABRICATOR

DESCRIPTION	DATE	DATE	JOB No.
PLATE	05/23/2011		70234
	DRAWN BY TMc	DRAWN BY TAN	DRG No. p36

MATERIAL NOTE:
W-SHAPES, CHANNELS: ASTM A992
ANGLES, S-SHAPES: ASTM A36
PLATE AND BAR: ASTM A36
PIPE: ASTM A53, GRADE B
HSS: ASTM A500, GRADE B

PROCESS CONTROL
PROCESS BY
FAB: _____
FIT AND WELD: _____
INSPECTION: _____
OTHER (IF NEEDED) _____
_____ : _____
_____ : _____
_____ : _____
_____ : _____
REFERENCE LATEST ERECTION DRAWINGS FOR MATERIAL & FABRICATION INFORMATION

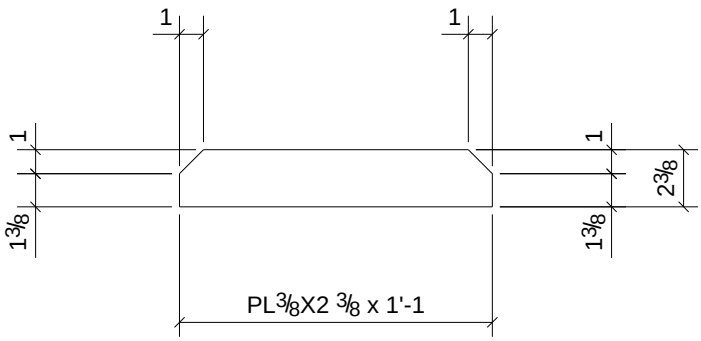

4	B77
Qty.	In Assembly

Qty.	Mark	Size	Length	Comments	Grade
4	p37	PL3/8"X2 3/8"	1'-1"		A36

PROJECT NAME
OLDE ORCHARD ELEMENTARY SCHOOL

LOCATION
800 McNAUGHTEN RD. COLUMBUS, OHIO 43213

CUSTOMER
THOMAS AND MARKER CONSTRUCTION

ARCHITECT
BRAUN & STEIDL

NORTH CENTRAL FABRICATION
Mansfield, OH 44906
419-529-2744 FAX 419-529-5387 http://www.northcentralfabri

AISC CERTIFIED FABRICATOR

DESCRIPTION	DATE	DATE	JOB No.
PLATE	05/23/2011		70234
	DRAWN BY TMc	DRAWN BY TAN	DRG No. p37

MATERIAL NOTE:
W-SHAPES, CHANNELS: ASTM A992
ANGLES, S-SHAPES: ASTM A36
PLATE AND BAR: ASTM A36
PIPE: ASTM A53, GRADE B
HSS: ASTM A500, GRADE B

PROCESS CONTROL
PROCESS BY
FAB: _____
FIT AND WELD: _____
INSPECTION: _____
OTHER (IF NEEDED) _____
_____ : _____
_____ : _____
_____ : _____
_____ : _____
REFERENCE LATEST ERECTION DRAWINGS FOR MATERIAL & FABRICATION INFORMATION

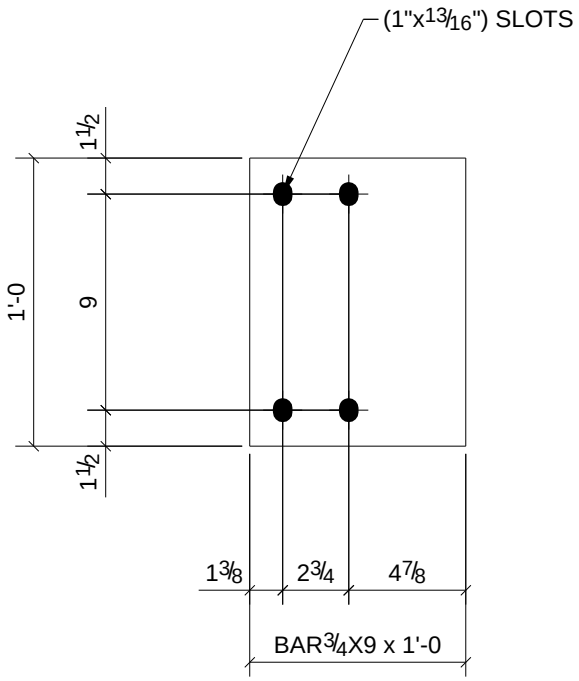

1	C30
Qty.	In Assembly

Qty.	Mark	Size	Length	Comments	Grade
1	p38	BAR3/4"X9"	1'-0"		A36

PROJECT NAME
OLDE ORCHARD ELEMENTARY SCHOOL

LOCATION
800 McNAUGHTEN RD. COLUMBUS, OHIO 43213

CUSTOMER
THOMAS AND MARKER CONSTRUCTION

ARCHITECT
BRAUN & STEIDL

NORTH CENTRAL FABRICATION
Mansfield, OH 44906
419-529-2744 FAX 419-529-5387 http://www.northcentralfabri

AISC CERTIFIED FABRICATOR

DESCRIPTION
PLATE

DATE	DATE	JOB No.
05/23/2011		70234
DRAWN BY	DRAWN BY	DRG No.
TMc	TAN	p38

MATERIAL NOTE:
W-SHAPES, CHANNELS: ASTM A992
ANGLES, S-SHAPES: ASTM A36
PLATE AND BAR: ASTM A36
PIPE: ASTM A53, GRADE B
HSS: ASTM A500, GRADE B

PROCESS CONTROL
PROCESS BY
FAB: _____
FIT AND WELD: _____
INSPECTION: _____
OTHER (IF NEEDED) _____
_____ : _____
_____ : _____
_____ : _____
_____ : _____
REFERENCE LATEST ERECTION DRAWINGS FOR MATERIAL & FABRICATION INFORMATION

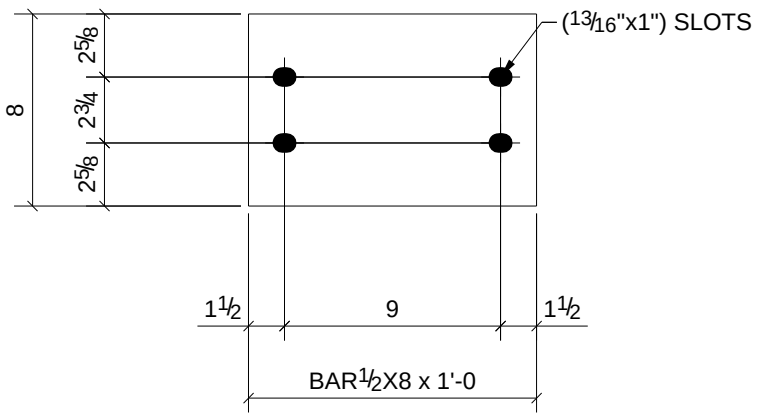

1	C20
Qty.	In Assembly

Qty.	Mark	Size	Length	Comments	Grade
1	p39	BAR1/2"X8"	1'-0"		A36

PROJECT NAME
OLDE ORCHARD ELEMENTARY SCHOOL

LOCATION
800 McNAUGHTEN RD. COLUMBUS, OHIO 43213

CUSTOMER
THOMAS AND MARKER CONSTRUCTION

ARCHITECT
BRAUN & STEIDL

NORTH CENTRAL FABRICATION
Mansfield, OH 44906
419-529-2744 FAX 419-529-5387 http://www.northcentralfabri

AISC CERTIFIED FABRICATOR

DESCRIPTION
PLATE

DATE	DATE	JOB No.
05/23/2011		70234
DRAWN BY	DRAWN BY	DRG No.
TMc	TAN	p39

MATERIAL NOTE:
W-SHAPES, CHANNELS: ASTM A992
ANGLES, S-SHAPES: ASTM A36
PLATE AND BAR: ASTM A36
PIPE: ASTM A53, GRADE B
HSS: ASTM A500, GRADE B

PROCESS CONTROL
PROCESS BY
FAB: _____
FIT AND WELD: _____
INSPECTION: _____
OTHER (IF NEEDED) _____
_____ : _____
_____ : _____
_____ : _____
_____ : _____
REFERENCE LATEST ERECTION DRAWINGS FOR MATERIAL & FABRICATION INFORMATION

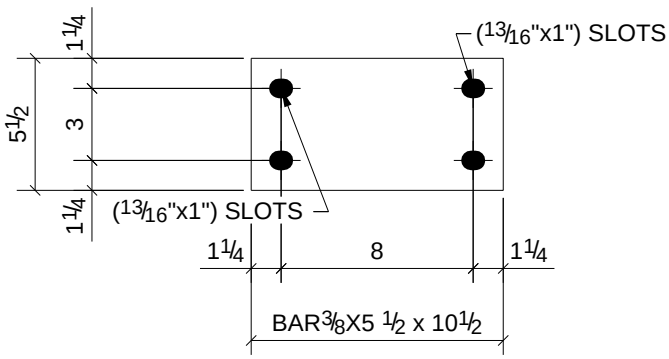

1	C27
1	C28
1	C49
Qty.	In Assembly

Qty.	Mark	Size	Length	Comments	Grade
3	p40	BAR3/8"X5 1/2"	0'-10 1/2"		A992

PROJECT NAME
OLDE ORCHARD ELEMENTARY SCHOOL

LOCATION
800 McNAUGHTEN RD. COLUMBUS, OHIO 43213

CUSTOMER
THOMAS AND MARKER CONSTRUCTION

ARCHITECT
BRAUN & STEIDL

NORTH CENTRAL FABRICATION
Mansfield, OH 44906
419-529-2744 FAX 419-529-5387 http://www.northcentralfabri

AISC CERTIFIED FABRICATOR

DESCRIPTION
PLATE

DATE	DATE	JOB No.
05/28/2011		70234
DRAWN BY	DRAWN BY	DRG No.
TMc	TAN	p40

MATERIAL NOTE:
W-SHAPES, CHANNELS: ASTM A992
ANGLES, S-SHAPES: ASTM A36
PLATE AND BAR: ASTM A36
PIPE: ASTM A53, GRADE B
HSS: ASTM A500, GRADE B

PROCESS CONTROL
PROCESS BY
FAB: _____
FIT AND WELD: _____
INSPECTION: _____
OTHER (IF NEEDED) _____
_____ : _____
_____ : _____
_____ : _____
_____ : _____
REFERENCE LATEST ERECTION DRAWINGS FOR MATERIAL & FABRICATION INFORMATION

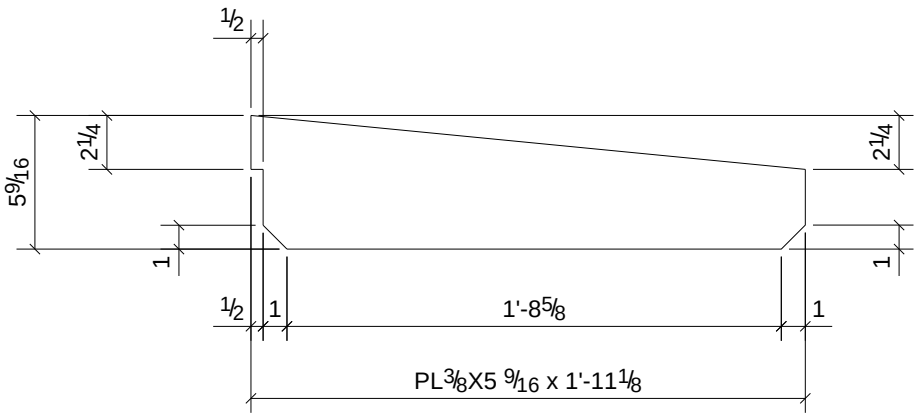

1	B106
Qty.	In Assembly

Qty.	Mark	Size	Length	Comments	Grade
1	p42	PL3/8"X5 9/16"	1'-11 1/8"		A36

PROJECT NAME
OLDE ORCHARD ELEMENTARY SCHOOL

LOCATION
800 McNAUGHTEN RD. COLUMBUS, OHIO 43213

CUSTOMER
THOMAS AND MARKER CONSTRUCTION

ARCHITECT
BRAUN & STEIDL

NORTH CENTRAL FABRICATION
Mansfield, OH 44906
419-529-2744 FAX 419-529-5387 http://www.northcentralfabri

AISC CERTIFIED FABRICATOR

DESCRIPTION
PLATE

DATE	DATE	JOB No.
05/27/2011		70234
DRAWN BY	DRAWN BY	DRG No.
TMc	TAN	p42

MATERIAL NOTE:
W-SHAPES, CHANNELS: ASTM A992
ANGLES, S-SHAPES: ASTM A36
PLATE AND BAR: ASTM A36
PIPE: ASTM A53, GRADE B
HSS: ASTM A500, GRADE B

PROCESS CONTROL
PROCESS BY
FAB: _____
FIT AND WELD: _____
INSPECTION: _____
OTHER (IF NEEDED)
_____ : _____
_____ : _____
_____ : _____
_____ : _____
REFERENCE LATEST ERECTION DRAWINGS FOR MATERIAL & FABRICATION INFORMATION

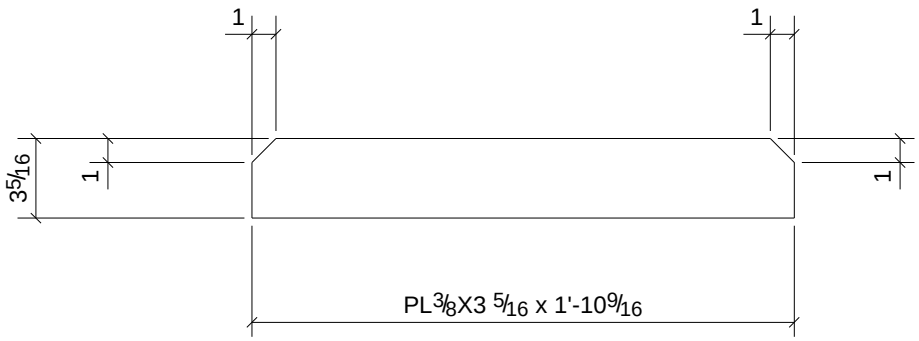

4	B106
4	B122
Qty.	In Assembly

Qty.	Mark	Size	Length	Comments	Grade
8	p43	PL3/8"X3 5/16"	1'-10 9/16"		A36

PROJECT NAME
OLDE ORCHARD ELEMENTARY SCHOOL

LOCATION
800 McNAUGHTEN RD. COLUMBUS, OHIO 43213

CUSTOMER
THOMAS AND MARKER CONSTRUCTION

ARCHITECT
BRAUN & STEIDL

NORTH CENTRAL FABRICATION
Mansfield, OH 44906
419-529-2744 FAX 419-529-5387 http://www.northcentralfabri

AISC CERTIFIED FABRICATOR

DESCRIPTION
PLATE

DATE	DATE	JOB No.
05/23/2011		70234
DRAWN BY	DRAWN BY	DRG No.
TMc	TAN	p43

MATERIAL NOTE:
W-SHAPES, CHANNELS: ASTM A992
ANGLES, S-SHAPES: ASTM A36
PLATE AND BAR: ASTM A36
PIPE: ASTM A53, GRADE B
HSS: ASTM A500, GRADE B

PROCESS CONTROL
PROCESS BY
FAB: _____
FIT AND WELD: _____
INSPECTION: _____
OTHER (IF NEEDED) _____
_____ : _____
_____ : _____
_____ : _____
_____ : _____
REFERENCE LATEST ERECTION DRAWINGS FOR MATERIAL & FABRICATION INFORMATION

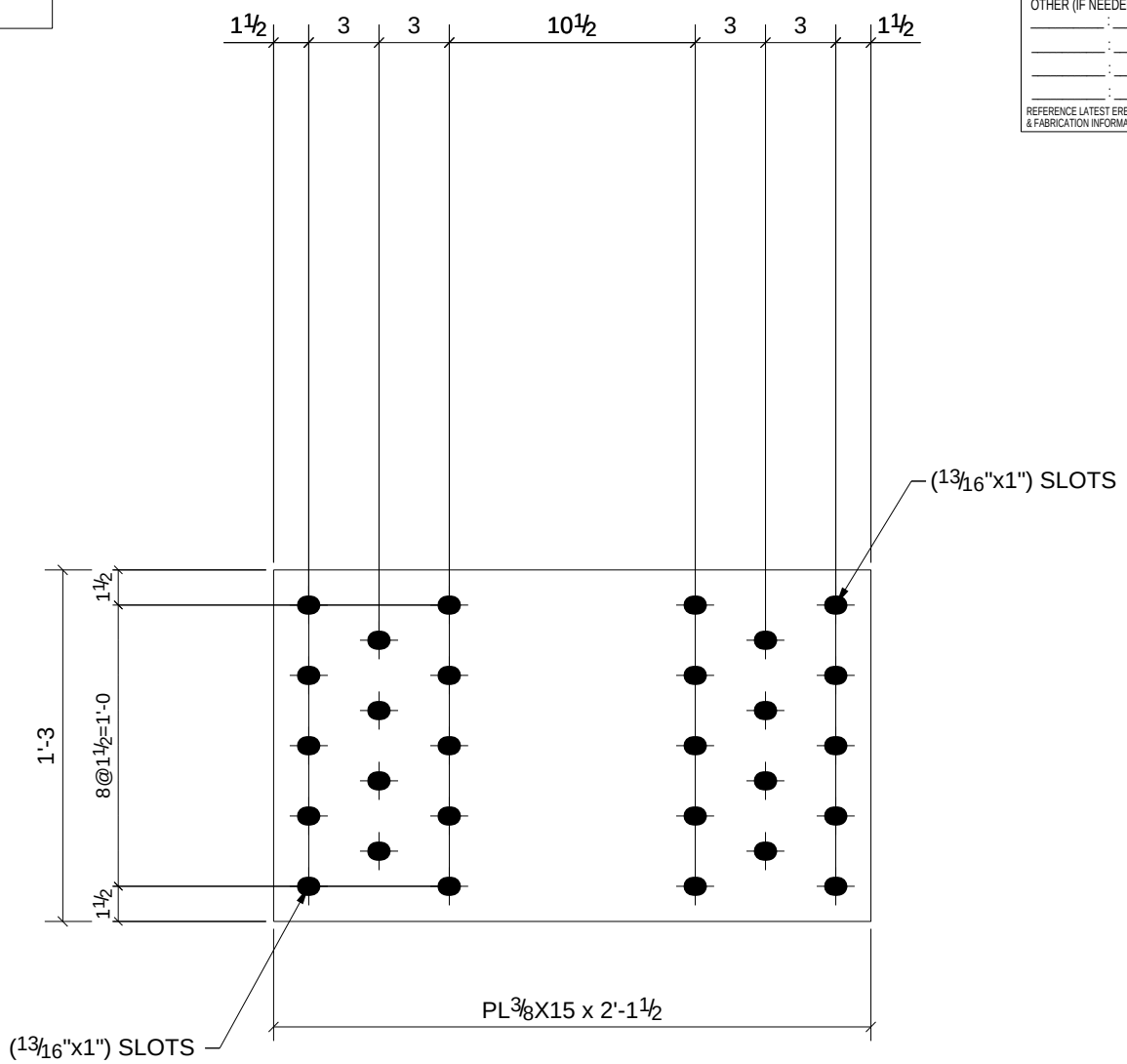

1	C8
2	C9
Qty.	In Assembly

Qty.	Mark	Size	Length	Comments	Grade
3	p44	PL3/8"X15"	2'-1 1/2"		A36

PROJECT NAME
OLDE ORCHARD ELEMENTARY SCHOOL

LOCATION
800 McNAUGHTEN RD. COLUMBUS, OHIO 43213

CUSTOMER
THOMAS AND MARKER CONSTRUCTION

ARCHITECT
BRAUN & STEIDL

NORTH CENTRAL FABRICATION
Mansfield, OH 44906
419-529-2744 FAX 419-529-5387 http://www.northcentralfabri

AISC CERTIFIED FABRICATOR

DESCRIPTION	DATE	DATE	JOB No.
PLATE	05/28/2011		70234
	DRAWN BY TMc	DRAWN BY TAN	DRG No. p44

MATERIAL NOTE:
W-SHAPES, CHANNELS: ASTM A992
ANGLES, S-SHAPES: ASTM A36
PLATE AND BAR: ASTM A36
PIPE: ASTM A53, GRADE B
HSS: ASTM A500, GRADE B

PROCESS CONTROL
PROCESS BY
FAB: _____
FIT AND WELD: _____
INSPECTION: _____
OTHER (IF NEEDED) _____
_____ : _____
_____ : _____
_____ : _____
_____ : _____
REFERENCE LATEST ERECTION DRAWINGS FOR MATERIAL & FABRICATION INFORMATION

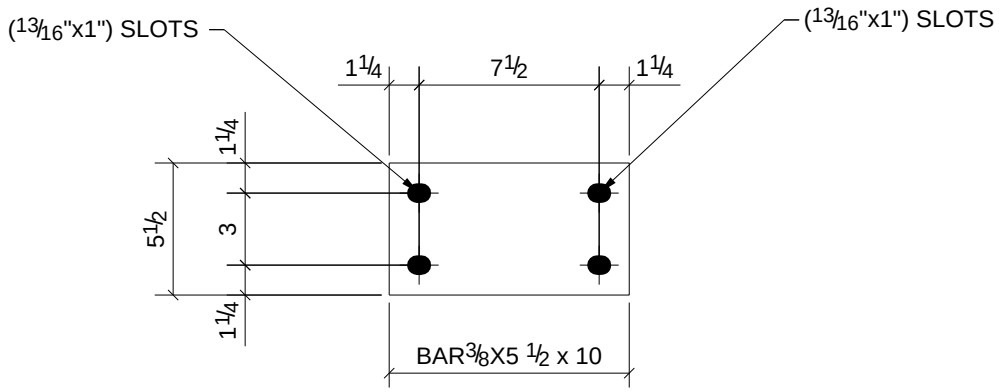

4	C1
4	C2
5	C4
4	C6
Qty.	In Assembly

Qty.	Mark	Size	Length	Comments	Grade
17	p45	BAR3/8"X5 1/2"	0'-10"		A992

PROJECT NAME
OLDE ORCHARD ELEMENTARY SCHOOL

LOCATION
800 McNAUGHTEN RD. COLUMBUS, OHIO 43213

CUSTOMER
THOMAS AND MARKER CONSTRUCTION

ARCHITECT
BRAUN & STEIDL

NORTH CENTRAL FABRICATION
Mansfield, OH 44906
419-529-2744 FAX 419-529-5387 http://www.northcentralfabri

AISC CERTIFIED FABRICATOR

DESCRIPTION
PLATE

DATE	DATE	JOB No.
05/23/2011		70234
DRAWN BY	DRAWN BY	DRG No.
TMc	TAN	p45

MATERIAL NOTE:
W-SHAPES, CHANNELS: ASTM A992
ANGLES, S-SHAPES: ASTM A36
PLATE AND BAR: ASTM A36
PIPE: ASTM A53, GRADE B
HSS: ASTM A500, GRADE B

PROCESS CONTROL
PROCESS BY
FAB: _____
FIT AND WELD: _____
INSPECTION: _____
OTHER (IF NEEDED)
_____ : _____
_____ : _____
_____ : _____
_____ : _____
REFERENCE LATEST ERECTION DRAWINGS FOR MATERIAL & FABRICATION INFORMATION

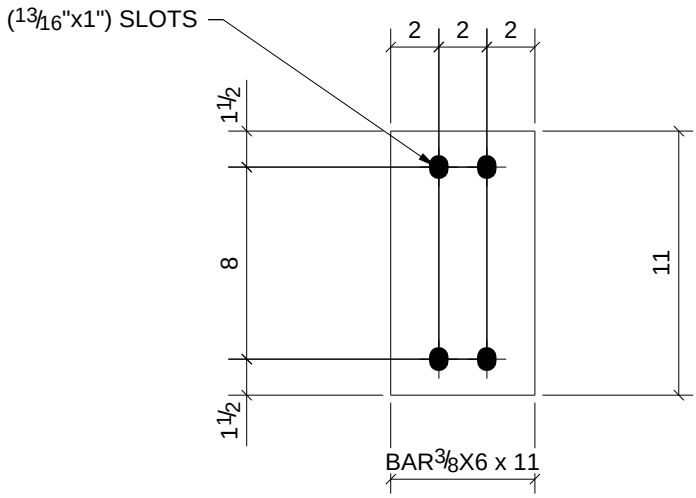

1	C3
1	C29
Qty.	In Assembly

Qty.	Mark	Size	Length	Comments	Grade
2	p46	BAR3/8"X6"	0'-11"		A992

PROJECT NAME
OLDE ORCHARD ELEMENTARY SCHOOL

LOCATION
800 McNAUGHTEN RD. COLUMBUS, OHIO 43213

CUSTOMER
THOMAS AND MARKER CONSTRUCTION

ARCHITECT
BRAUN & STEIDL

NORTH CENTRAL FABRICATION
Mansfield, OH 44906
419-529-2744 FAX 419-529-5387 http://www.northcentralfabri

AISC CERTIFIED FABRICATOR

DESCRIPTION
PLATE

DATE	DATE	JOB No.
05/28/2011		70234
DRAWN BY	DRAWN BY	DRG No.
		p46

MATERIAL NOTE:
W-SHAPES, CHANNELS: ASTM A992
ANGLES, S-SHAPES: ASTM A36
PLATE AND BAR: ASTM A36
PIPE: ASTM A53, GRADE B
HSS: ASTM A500, GRADE B

PROCESS CONTROL
PROCESS BY
FAB: _____
FIT AND WELD: _____
INSPECTION: _____
OTHER (IF NEEDED)
_____ : _____
_____ : _____
_____ : _____
_____ : _____
REFERENCE LATEST ERECTION DRAWINGS FOR MATERIAL & FABRICATION INFORMATION

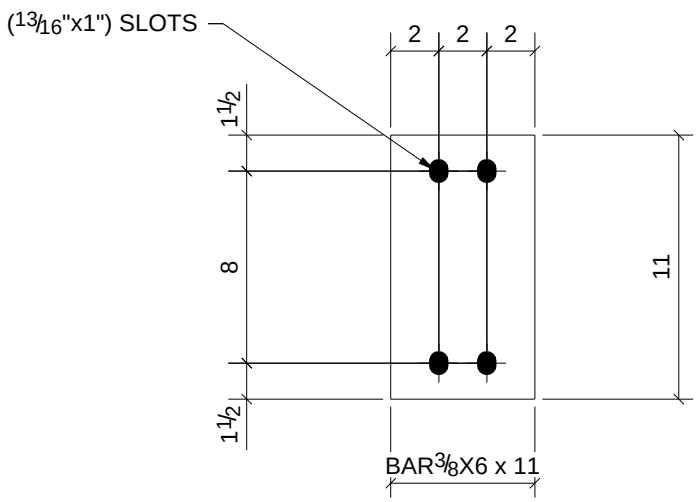

1	B21
1	B107
Qty.	In Assembly

Qty.	Mark	Size	Length	Comments	Grade
2	p48	BAR3/8"X6"	0'-11"		A992

PROJECT NAME
OLDE ORCHARD ELEMENTARY SCHOOL

LOCATION
800 McNAUGHTEN RD. COLUMBUS, OHIO 43213

CUSTOMER
THOMAS AND MARKER CONSTRUCTION

ARCHITECT
BRAUN & STEIDL

NORTH CENTRAL FABRICATION
Mansfield, OH 44906
419-529-2744 FAX 419-529-5387 http://www.northcentralfabri

AISC CERTIFIED FABRICATOR

DESCRIPTION
PLATE

DATE	DATE	JOB No.
05/23/2011		70234
DRAWN BY	DRAWN BY	DRG No.
TMc	TAN	p48

MATERIAL NOTE:
W-SHAPES, CHANNELS: ASTM A992
ANGLES, S-SHAPES: ASTM A36
PLATE AND BAR: ASTM A36
PIPE: ASTM A53, GRADE B
HSS: ASTM A500, GRADE B

PROCESS CONTROL
PROCESS BY
FAB: _____
FIT AND WELD: _____
INSPECTION: _____
OTHER (IF NEEDED) _____
_____ : _____
_____ : _____
_____ : _____
_____ : _____
REFERENCE LATEST ERECTION DRAWINGS FOR MATERIAL & FABRICATION INFORMATION

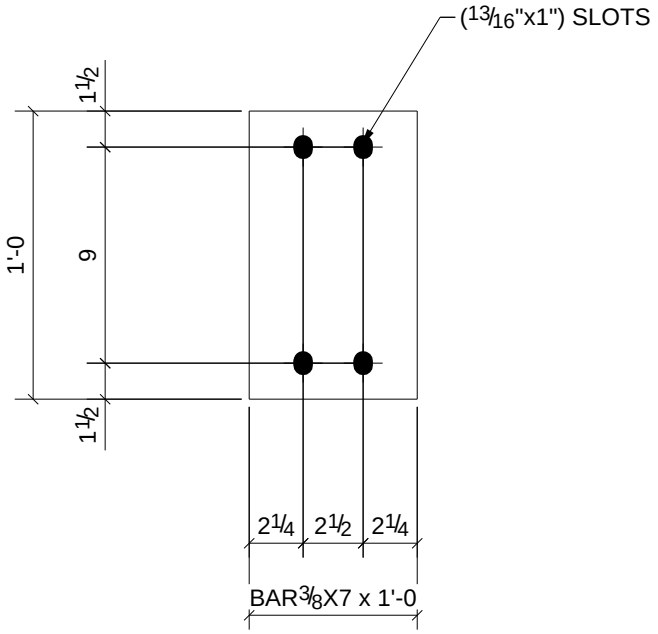

1	B84	
1	C22	
Qty.	In Assembly	

Qty.	Mark	Size	Length	Comments	Grade
2	p49	BAR3/8"X7"	1'-0"		A36

PROJECT NAME
OLDE ORCHARD ELEMENTARY SCHOOL

LOCATION
800 McNAUGHTEN RD. COLUMBUS, OHIO 43213

CUSTOMER
THOMAS AND MARKER CONSTRUCTION

ARCHITECT
BRAUN & STEIDL

NORTH CENTRAL FABRICATION
Mansfield, OH 44906
419-529-2744 FAX 419-529-5387 http://www.northcentralfabri

AISC CERTIFIED FABRICATOR

DESCRIPTION
PLATE

DATE	DATE	JOB No.
05/23/2011		70234
DRAWN BY	DRAWN BY	DRG No.
TMc	TAN	p49

MATERIAL NOTE:
W-SHAPES, CHANNELS: ASTM A992
ANGLES, S-SHAPES: ASTM A36
PLATE AND BAR: ASTM A36
PIPE: ASTM A53, GRADE B
HSS: ASTM A500, GRADE B

PROCESS CONTROL
PROCESS BY
FAB: _____
FIT AND WELD: _____
INSPECTION: _____
OTHER (IF NEEDED) _____
_____ : _____
_____ : _____
_____ : _____
_____ : _____
REFERENCE LATEST ERECTION DRAWINGS FOR MATERIAL & FABRICATION INFORMATION

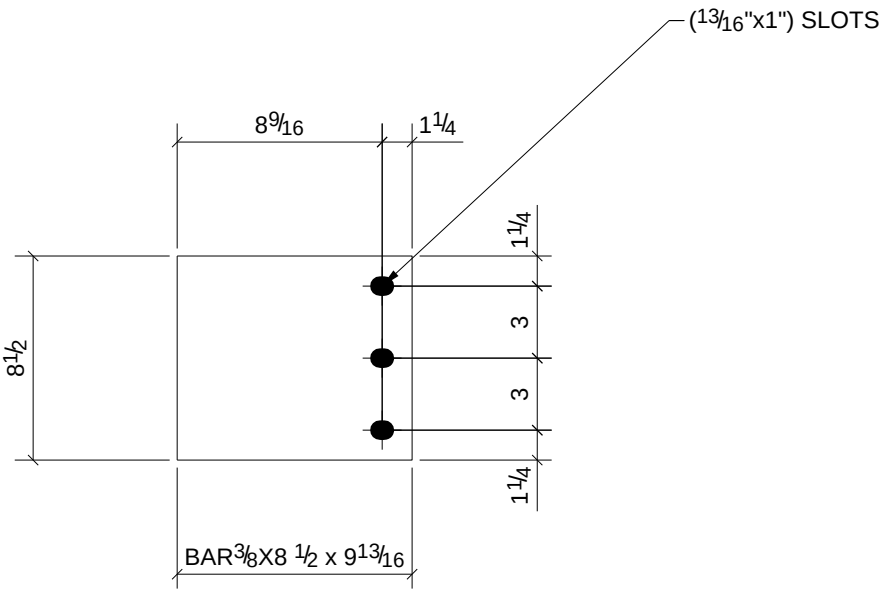

1	C30
Qty.	In Assembly

Qty.	Mark	Size	Length	Comments	Grade
1	p50	BAR3/8"X8 1/2"	0'-9 13/16"		A992

PROJECT NAME
OLDE ORCHARD ELEMENTARY SCHOOL

LOCATION
800 McNAUGHTEN RD. COLUMBUS, OHIO 43213

CUSTOMER
THOMAS AND MARKER CONSTRUCTION

ARCHITECT
BRAUN & STEIDL

NORTH CENTRAL FABRICATION
Mansfield, OH 44906
419-529-2744 FAX 419-529-5387 http://www.northcentralfabri

AISC CERTIFIED FABRICATOR

DESCRIPTION
PLATE

DATE	DATE	JOB No.
05/23/2011		70234
DRAWN BY	DRAWN BY	DRG No.
TMc	TAN	p50

MATERIAL NOTE:
W-SHAPES, CHANNELS: ASTM A992
ANGLES, S-SHAPES: ASTM A36
PLATE AND BAR: ASTM A36
PIPE: ASTM A53, GRADE B
HSS: ASTM A500, GRADE B

PROCESS CONTROL
PROCESS BY
FAB: _____
FIT AND WELD: _____
INSPECTION: _____
OTHER (IF NEEDED) _____
_____ : _____
_____ : _____
_____ : _____
_____ : _____
REFERENCE LATEST ERECTION DRAWINGS FOR MATERIAL & FABRICATION INFORMATION

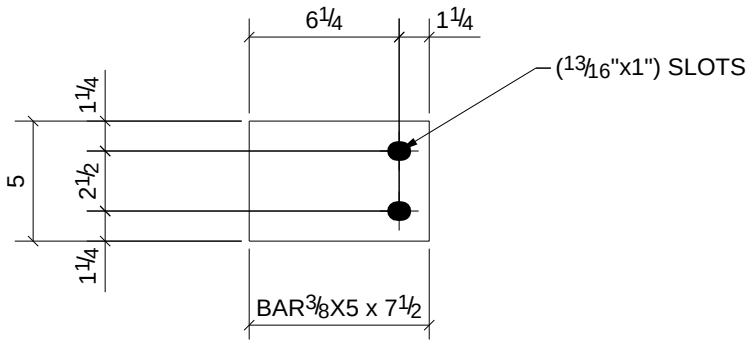

1	C3
5	C7
1	C13
1	C17
2	C23
2	C27
2	C48
2	C49
Qty.	In Assembly

Qty.	Mark	Size	Length	Comments	Grade
16	p53	BAR3/8"X5"	0'-7 1/2"		A992

PROJECT NAME
OLDE ORCHARD ELEMENTARY SCHOOL

LOCATION
800 McNAUGHTEN RD. COLUMBUS, OHIO 43213

CUSTOMER
THOMAS AND MARKER CONSTRUCTION

ARCHITECT
BRAUN & STEIDL

NORTH CENTRAL FABRICATION
Mansfield, OH 44906
419-529-2744 FAX 419-529-5387 http://www.northcentralfabri

AISC CERTIFIED FABRICATOR

DESCRIPTION
PLATE

DATE	DATE	JOB No.
05/23/2011		70234
DRAWN BY	DRAWN BY	DRG No.
TMc	TAN	p53

MATERIAL NOTE:
W-SHAPES, CHANNELS: ASTM A992
ANGLES, S-SHAPES: ASTM A36
PLATE AND BAR: ASTM A36
PIPE: ASTM A53, GRADE B
HSS: ASTM A500, GRADE B

PROCESS CONTROL
PROCESS BY
FAB: _____
FIT AND WELD: _____
INSPECTION: _____
OTHER (IF NEEDED) _____
_____ : _____
_____ : _____
_____ : _____
_____ : _____
REFERENCE LATEST ERECTION DRAWINGS FOR MATERIAL & FABRICATION INFORMATION

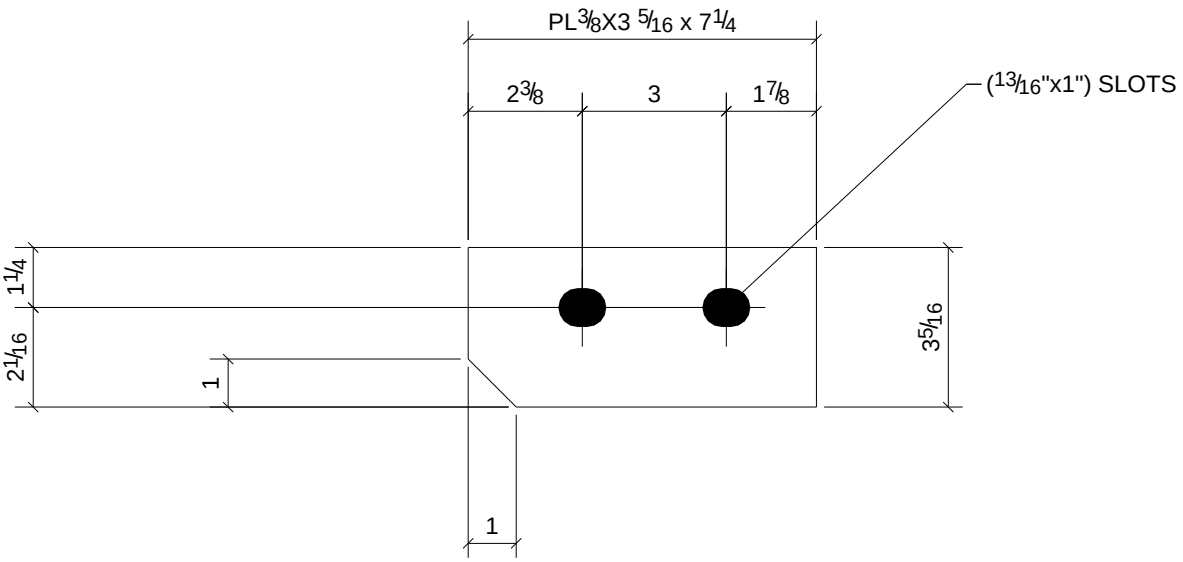

1	C26
Qty.	In Assembly

Qty.	Mark	Size	Length	Comments	Grade
1	p54	PL3/8"X3 5/16"	0'-7 1/4"		A36

PROJECT NAME
OLDE ORCHARD ELEMENTARY SCHOOL

LOCATION
800 McNAUGHTEN RD. COLUMBUS, OHIO 43213

CUSTOMER
THOMAS AND MARKER CONSTRUCTION

ARCHITECT
BRAUN & STEIDL

NORTH CENTRAL FABRICATION
Mansfield, OH 44906
419-529-2744 FAX 419-529-5387 http://www.northcentralfabri

AISC CERTIFIED FABRICATOR

DESCRIPTION
PLATE

DATE	DATE	JOB No.
05/23/2011		70234
DRAWN BY	DRAWN BY	DRG No.
TMc	TAN	p54

MATERIAL NOTE:
W-SHAPES, CHANNELS: ASTM A992
ANGLES, S-SHAPES: ASTM A36
PLATE AND BAR: ASTM A36
PIPE: ASTM A53, GRADE B
HSS: ASTM A500, GRADE B

PROCESS CONTROL
PROCESS BY
FAB: _____
FIT AND WELD: _____
INSPECTION: _____
OTHER (IF NEEDED) _____
_____ : _____
_____ : _____
_____ : _____
_____ : _____
REFERENCE LATEST ERECTION DRAWINGS FOR MATERIAL & FABRICATION INFORMATION

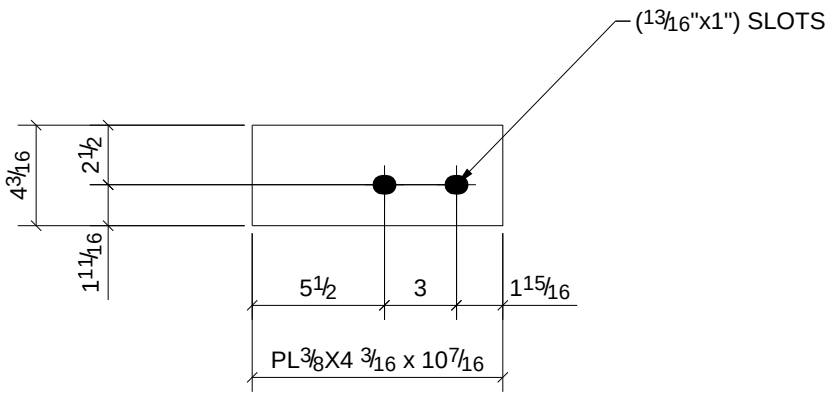

1	C25
Qty.	In Assembly

Qty.	Mark	Size	Length	Comments	Grade
1	p55	PL3/8"X4 3/16"	0'-10 7/16"		A36

PROJECT NAME
OLDE ORCHARD ELEMENTARY SCHOOL

LOCATION
800 McNAUGHTEN RD. COLUMBUS, OHIO 43213

CUSTOMER
THOMAS AND MARKER CONSTRUCTION

ARCHITECT
BRAUN & STEIDL

NORTH CENTRAL FABRICATION
Mansfield, OH 44906
419-529-2744 FAX 419-529-5387 http://www.northcentralfabri

AISC CERTIFIED FABRICATOR

DESCRIPTION
PLATE

DATE	DATE	JOB No.
05/23/2011		70234
DRAWN BY	DRAWN BY	DRG No.
TMc	TAN	p55

MATERIAL NOTE:
W-SHAPES, CHANNELS: ASTM A992
ANGLES, S-SHAPES: ASTM A36
PLATE AND BAR: ASTM A36
PIPE: ASTM A53, GRADE B
HSS: ASTM A500, GRADE B

PROCESS CONTROL
PROCESS BY
FAB: _____
FIT AND WELD: _____
INSPECTION: _____
OTHER (IF NEEDED) _____
_____ : _____
_____ : _____
_____ : _____
_____ : _____
REFERENCE LATEST ERECTION DRAWINGS FOR MATERIAL & FABRICATION INFORMATION

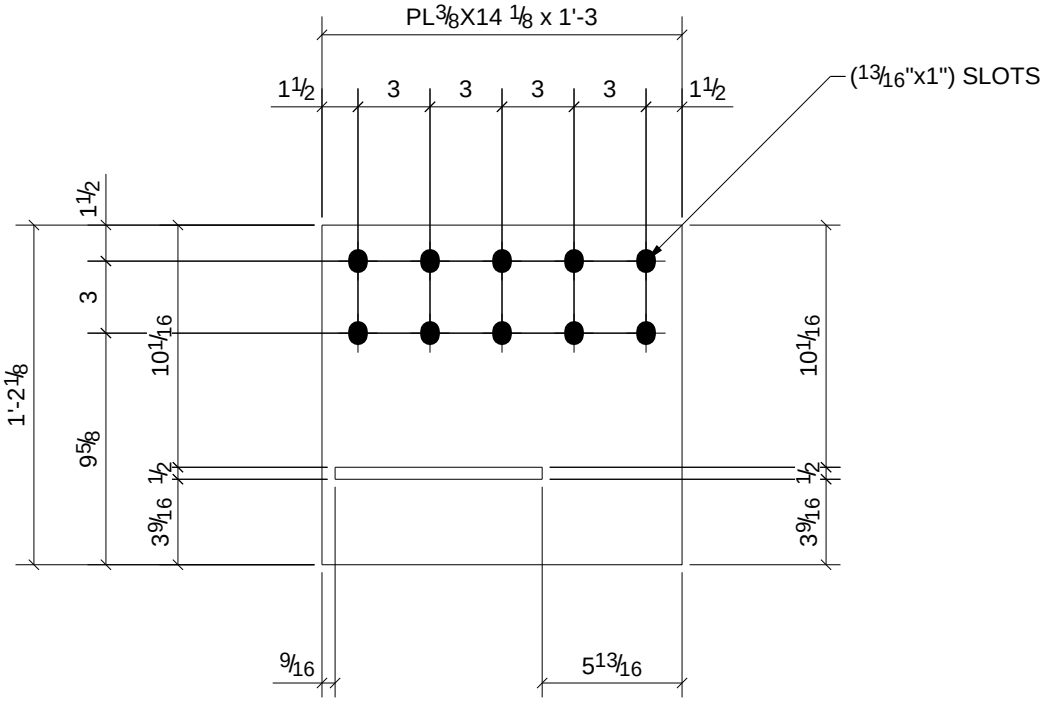

1	C26
Qty.	In Assembly

Qty.	Mark	Size	Length	Comments	Grade
1	p56	PL3/8"X14 1/8"	1'-3"		A36

PROJECT NAME
OLDE ORCHARD ELEMENTARY SCHOOL

LOCATION
800 McNAUGHTEN RD. COLUMBUS, OHIO 43213

CUSTOMER
THOMAS AND MARKER CONSTRUCTION

ARCHITECT
BRAUN & STEIDL

NORTH CENTRAL FABRICATION
Mansfield, OH 44906
419-529-2744 FAX 419-529-5387 http://www.northcentralfabri

AISC CERTIFIED FABRICATOR

DESCRIPTION
PLATE

DATE	DATE	JOB No.
05/23/2011		70234
DRAWN BY	DRAWN BY	DRG No.
TMc	TAN	p56

MATERIAL NOTE:
W-SHAPES, CHANNELS: ASTM A992
ANGLES, S-SHAPES: ASTM A36
PLATE AND BAR: ASTM A36
PIPE: ASTM A53, GRADE B
HSS: ASTM A500, GRADE B

PROCESS CONTROL
PROCESS BY
FAB: _____
FIT AND WELD: _____
INSPECTION: _____
OTHER (IF NEEDED) _____
_____ : _____
_____ : _____
_____ : _____
_____ : _____
REFERENCE LATEST ERECTION DRAWINGS FOR MATERIAL & FABRICATION INFORMATION

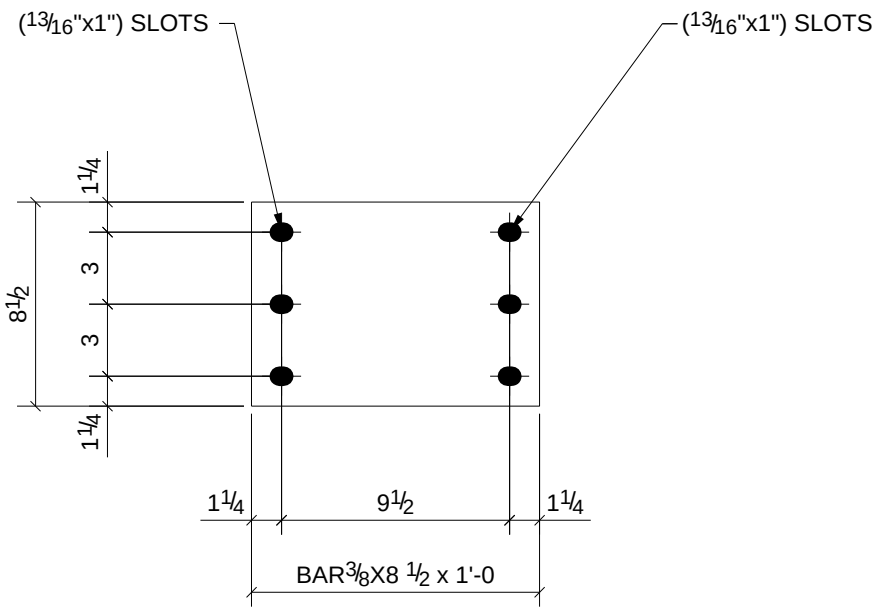

1	C26
Qty.	In Assembly

Qty.	Mark	Size	Length	Comments	Grade
1	p57	BAR3/8"X8 1/2"	1'-0"		A992

PROJECT NAME
OLDE ORCHARD ELEMENTARY SCHOOL

LOCATION
800 McNAUGHTEN RD. COLUMBUS, OHIO 43213

CUSTOMER
THOMAS AND MARKER CONSTRUCTION

ARCHITECT
BRAUN & STEIDL

NORTH CENTRAL FABRICATION
Mansfield, OH 44906
419-529-2744 FAX 419-529-5387 http://www.northcentralfabri

AISC CERTIFIED FABRICATOR

DESCRIPTION	DATE	DATE	JOB No.
PLATE	05/23/2011		70234
	DRAWN BY TMc	DRAWN BY TAN	DRG No. p57

MATERIAL NOTE:
W-SHAPES, CHANNELS: ASTM A992
ANGLES, S-SHAPES: ASTM A36
PLATE AND BAR: ASTM A36
PIPE: ASTM A53, GRADE B
HSS: ASTM A500, GRADE B

PROCESS CONTROL
PROCESS BY
FAB: _____
FIT AND WELD: _____
INSPECTION: _____
OTHER (IF NEEDED) _____
_____ : _____
_____ : _____
_____ : _____
_____ : _____
REFERENCE LATEST ERECTION DRAWINGS FOR MATERIAL & FABRICATION INFORMATION

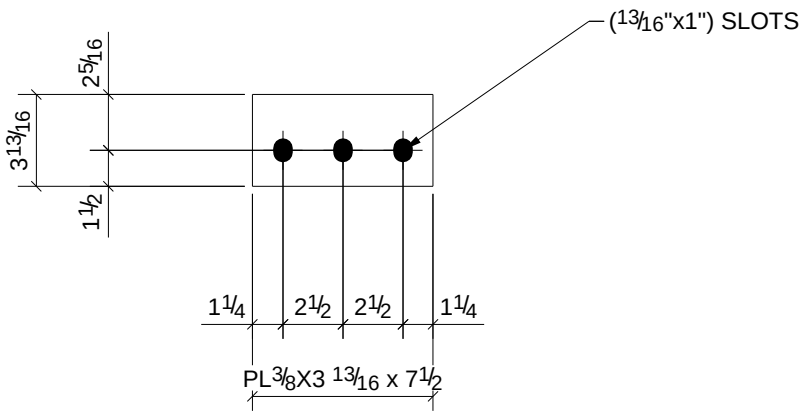

1	B84
Qty.	In Assembly

Qty.	Mark	Size	Length	Comments	Grade
1	p58	PL3/8"X3 13/16"	0'-7 1/2"		A992

PROJECT NAME
OLDE ORCHARD ELEMENTARY SCHOOL

LOCATION
800 McNAUGHTEN RD. COLUMBUS, OHIO 43213

CUSTOMER
THOMAS AND MARKER CONSTRUCTION

ARCHITECT
BRAUN & STEIDL

NORTH CENTRAL FABRICATION
Mansfield, OH 44906
419-529-2744 FAX 419-529-5387 http://www.northcentralfabri

AISC CERTIFIED FABRICATOR

DESCRIPTION	DATE	DATE	JOB No.
PLATE	05/23/2011		70234
	DRAWN BY TMc	DRAWN BY TAN	DRG No. p58

MATERIAL NOTE:
W-SHAPES, CHANNELS: ASTM A992
ANGLES, S-SHAPES: ASTM A36
PLATE AND BAR: ASTM A36
PIPE: ASTM A53, GRADE B
HSS: ASTM A500, GRADE B

PROCESS CONTROL
PROCESS BY
FAB: _____
FIT AND WELD: _____
INSPECTION: _____
OTHER (IF NEEDED) _____
_____ : _____
_____ : _____
_____ : _____
_____ : _____
REFERENCE LATEST ERECTION DRAWINGS FOR MATERIAL & FABRICATION INFORMATION

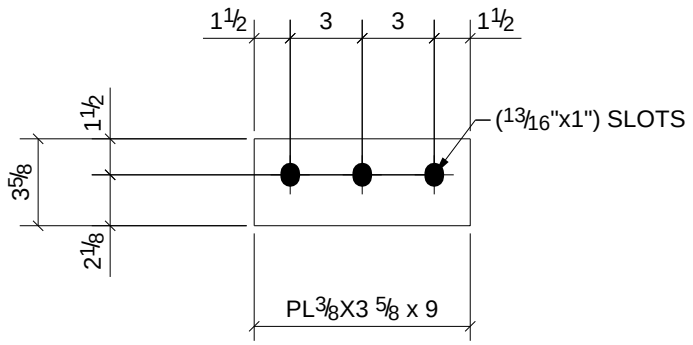

1	B115
Qty.	In Assembly

Qty.	Mark	Size	Length	Comments	Grade
1	p59	PL3/8"X3 5/8"	0'-9"		A992

PROJECT NAME
OLDE ORCHARD ELEMENTARY SCHOOL

LOCATION
800 McNAUGHTEN RD. COLUMBUS, OHIO 43213

CUSTOMER
THOMAS AND MARKER CONSTRUCTION

ARCHITECT
BRAUN & STEIDL

NORTH CENTRAL FABRICATION
Mansfield, OH 44906
419-529-2744 FAX 419-529-5387 http://www.northcentralfabri

AISC CERTIFIED FABRICATOR

DESCRIPTION	DATE	DATE	JOB No.
PLATE	05/23/2011		70234
	DRAWN BY TMc	DRAWN BY TAN	DRG No. p59

MATERIAL NOTE:
W-SHAPES, CHANNELS: ASTM A992
ANGLES, S-SHAPES: ASTM A36
PLATE AND BAR: ASTM A36
PIPE: ASTM A53, GRADE B
HSS: ASTM A500, GRADE B

PROCESS CONTROL
PROCESS BY
FAB: _____
FIT AND WELD: _____
INSPECTION: _____
OTHER (IF NEEDED) _____
_____ : _____
_____ : _____
_____ : _____
_____ : _____
REFERENCE LATEST ERECTION DRAWINGS FOR MATERIAL & FABRICATION INFORMATION

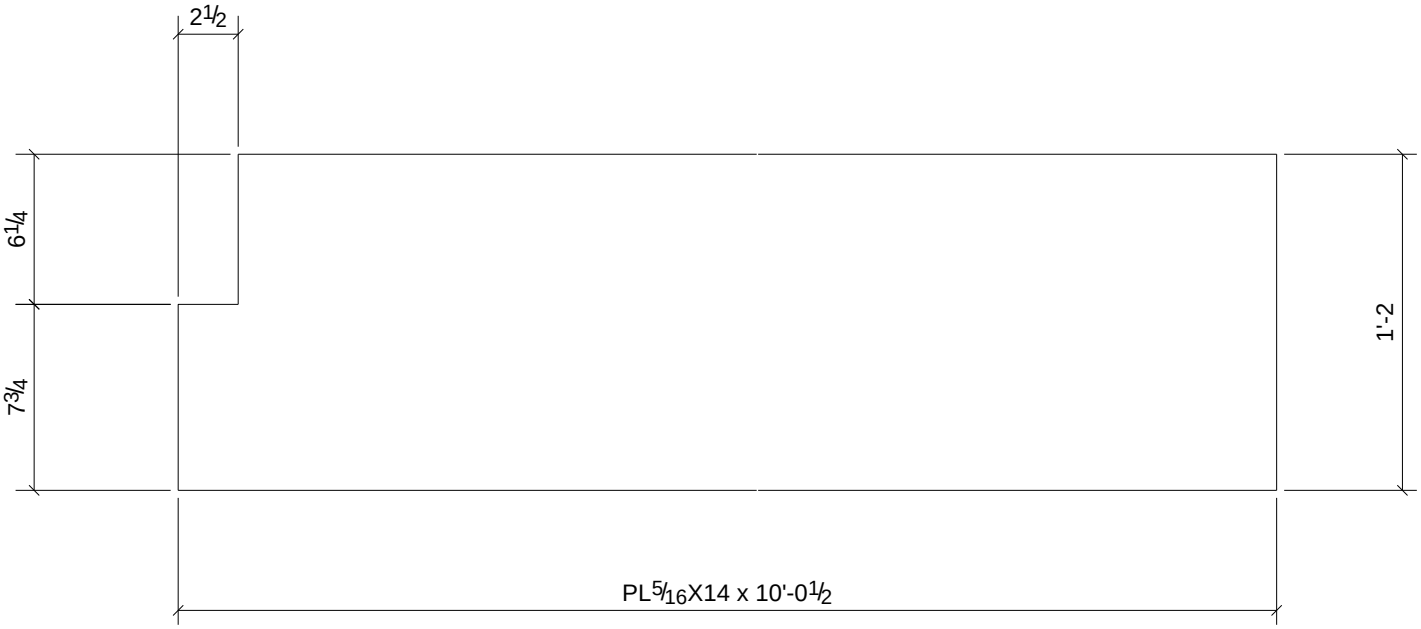

Qty.	In Assembly
1	L37

Qty.	Mark	Size	Length	Comments	Grade
1	p60	PL5/16"X14"	10'-0 1/2"		A36

PROJECT NAME
OLDE ORCHARD ELEMENTARY SCHOOL

LOCATION
800 McNAUGHTEN RD. COLUMBUS, OHIO 43213

CUSTOMER
THOMAS AND MARKER CONSTRUCTION

ARCHITECT
BRAUN & STEIDL

NORTH CENTRAL FABRICATION
Mansfield, OH 44906
419-529-2744 FAX 419-529-5387 http://www.northcentralfabri

AISC CERTIFIED FABRICATOR

DESCRIPTION
PLATE

DATE	DATE	JOB No.
05/23/2011		70234
DRAWN BY	DRAWN BY	DRG No.
TMc	TAN	p60

MATERIAL NOTE:
W-SHAPES, CHANNELS: ASTM A992
ANGLES, S-SHAPES: ASTM A36
PLATE AND BAR: ASTM A36
PIPE: ASTM A53, GRADE B
HSS: ASTM A500, GRADE B

PROCESS CONTROL
PROCESS BY
FAB: _____
FIT AND WELD: _____
INSPECTION: _____
OTHER (IF NEEDED) _____
_____ : _____
_____ : _____
_____ : _____
_____ : _____
REFERENCE LATEST ERECTION DRAWINGS FOR MATERIAL & FABRICATION INFORMATION

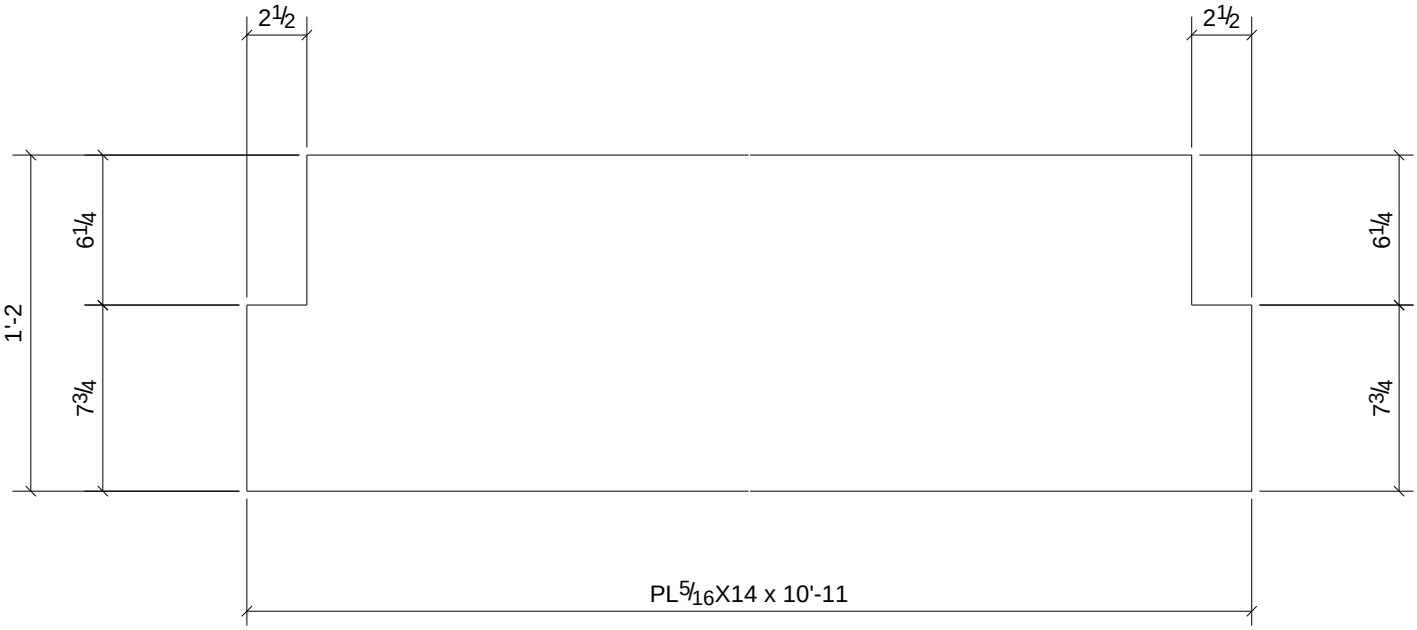

Qty.	In Assembly
2	L33

Qty.	Mark	Size	Length	Comments	Grade
2	p61	PL5/16"X14"	10'-11"		A36

PROJECT NAME
OLDE ORCHARD ELEMENTARY SCHOOL

LOCATION
800 McNAUGHTEN RD. COLUMBUS, OHIO 43213

CUSTOMER
THOMAS AND MARKER CONSTRUCTION

ARCHITECT
BRAUN & STEIDL

NORTH CENTRAL FABRICATION
Mansfield, OH 44906
419-529-2744 FAX 419-529-5387 http://www.northcentralfabri

AISC CERTIFIED FABRICATOR

DESCRIPTION
PLATE

DATE	DATE	JOB No.
05/23/2011		70234
DRAWN BY	DRAWN BY	DRG No.
TMc	TAN	p61

MATERIAL NOTE:
W-SHAPES, CHANNELS: ASTM A992
ANGLES, S-SHAPES: ASTM A36
PLATE AND BAR: ASTM A36
PIPE: ASTM A53, GRADE B
HSS: ASTM A500, GRADE B

PROCESS CONTROL
PROCESS BY
FAB: _____
FIT AND WELD: _____
INSPECTION: _____
OTHER (IF NEEDED) _____
_____ : _____
_____ : _____
_____ : _____
_____ : _____
REFERENCE LATEST ERECTION DRAWINGS FOR MATERIAL & FABRICATION INFORMATION

1	L25
1	L27
Qty.	In Assembly

Qty.	Mark	Size	Length	Comments	Grade
2	p62	PL5/16"X14"	6'-6 1/2"		A36

PROJECT NAME
OLDE ORCHARD ELEMENTARY SCHOOL

LOCATION
800 McNAUGHTEN RD. COLUMBUS, OHIO 43213

CUSTOMER
THOMAS AND MARKER CONSTRUCTION

ARCHITECT
BRAUN & STEIDL

NORTH CENTRAL FABRICATION
Mansfield, OH 44906
419-529-2744 FAX 419-529-5387 http://www.northcentralfabri

AISC CERTIFIED FABRICATOR

DESCRIPTION
PLATE

DATE	DATE	JOB No.
05/23/2011		70234
DRAWN BY	DRAWN BY	DRG No.
TMc	TAN	p62

MATERIAL NOTE:
W-SHAPES, CHANNELS: ASTM A992
ANGLES, S-SHAPES: ASTM A36
PLATE AND BAR: ASTM A36
PIPE: ASTM A53, GRADE B
HSS: ASTM A500, GRADE B

PROCESS CONTROL
PROCESS BY
FAB: _____
FIT AND WELD: _____
INSPECTION: _____
OTHER (IF NEEDED) _____
_____ : _____
_____ : _____
_____ : _____
_____ : _____
REFERENCE LATEST ERECTION DRAWINGS FOR MATERIAL & FABRICATION INFORMATION

1	L35
Qty.	In Assembly

Qty.	Mark	Size	Length	Comments	Grade
1	p63	PL5/16"X14"	7'-0 1/2"		A36

PROJECT NAME
OLDE ORCHARD ELEMENTARY SCHOOL

LOCATION
800 McNAUGHTEN RD. COLUMBUS, OHIO 43213

CUSTOMER
THOMAS AND MARKER CONSTRUCTION

ARCHITECT
BRAUN & STEIDL

NORTH CENTRAL FABRICATION
Mansfield, OH 44906
419-529-2744 FAX 419-529-5387 http://www.northcentralfabri

AISC CERTIFIED FABRICATOR

DESCRIPTION
PLATE

DATE	DATE	JOB No.
05/23/2011		70234
DRAWN BY	DRAWN BY	DRG No.
TMc	TAN	p63

MATERIAL NOTE:
W-SHAPES, CHANNELS: ASTM A992
ANGLES, S-SHAPES: ASTM A36
PLATE AND BAR: ASTM A36
PIPE: ASTM A53, GRADE B
HSS: ASTM A500, GRADE B

PROCESS CONTROL
PROCESS BY
FAB: _____
FIT AND WELD: _____
INSPECTION: _____
OTHER (IF NEEDED) _____
_____ : _____
_____ : _____
_____ : _____
_____ : _____
REFERENCE LATEST ERECTION DRAWINGS FOR MATERIAL & FABRICATION INFORMATION

1	L36
Qty.	In Assembly

Qty.	Mark	Size	Length	Comments	Grade
1	p65	PL5/16"X14"	10'-0 1/2"		A36

PROJECT NAME
OLDE ORCHARD ELEMENTARY SCHOOL

LOCATION
800 McNAUGHTEN RD. COLUMBUS, OHIO 43213

CUSTOMER
THOMAS AND MARKER CONSTRUCTION

ARCHITECT
BRAUN & STEIDL

NORTH CENTRAL FABRICATION
Mansfield, OH 44906
419-529-2744 FAX 419-529-5387 http://www.northcentralfabri

AISC CERTIFIED FABRICATOR

DESCRIPTION	DATE	DATE	JOB No.
PLATE	05/23/2011		70234
	DRAWN BY TMc	DRAWN BY TAN	DRG No. p65

MATERIAL NOTE:
W-SHAPES, CHANNELS: ASTM A992
ANGLES, S-SHAPES: ASTM A36
PLATE AND BAR: ASTM A36
PIPE: ASTM A53, GRADE B
HSS: ASTM A500, GRADE B

PROCESS CONTROL
PROCESS BY
FAB: _____
FIT AND WELD: _____
INSPECTION: _____
OTHER (IF NEEDED) _____
_____ : _____
_____ : _____
_____ : _____
_____ : _____
REFERENCE LATEST ERECTION DRAWINGS FOR MATERIAL & FABRICATION INFORMATION

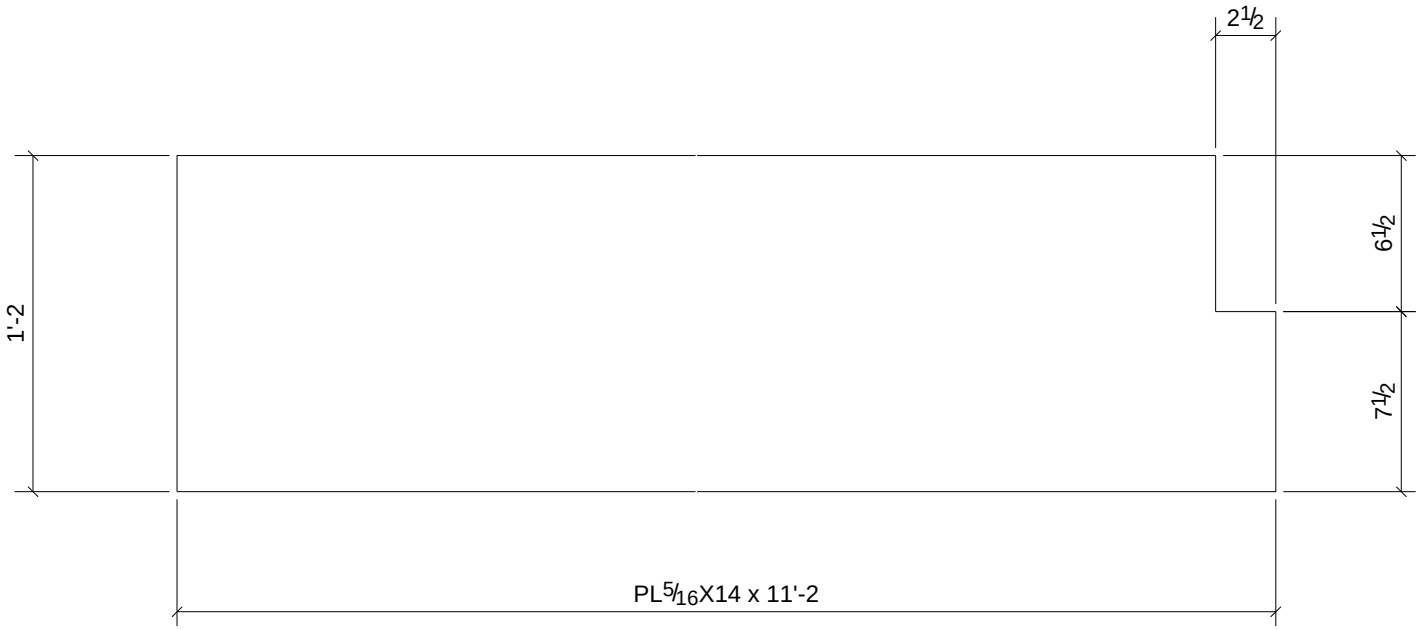

1	L52
Qty.	In Assembly

Qty.	Mark	Size	Length	Comments	Grade
1	p68	PL5/16"X14"	11'-2"		A36

PROJECT NAME
OLDE ORCHARD ELEMENTARY SCHOOL

LOCATION
800 McNAUGHTEN RD. COLUMBUS, OHIO 43213

CUSTOMER
THOMAS AND MARKER CONSTRUCTION

ARCHITECT
BRAUN & STEIDL

NORTH CENTRAL FABRICATION
Mansfield, OH 44906
419-529-2744 FAX 419-529-5387 http://www.northcentralfabri

AISC CERTIFIED FABRICATOR

DESCRIPTION
PLATE

DATE	DATE	JOB No.
05/23/2011		70234
DRAWN BY	DRAWN BY	DRG No.
TMc	TAN	p68

MATERIAL NOTE:
W-SHAPES, CHANNELS: ASTM A992
ANGLES, S-SHAPES: ASTM A36
PLATE AND BAR: ASTM A36
PIPE: ASTM A53, GRADE B
HSS: ASTM A500, GRADE B

PROCESS CONTROL
PROCESS BY
FAB: _____
FIT AND WELD: _____
INSPECTION: _____
OTHER (IF NEEDED) _____
_____ : _____
_____ : _____
_____ : _____
_____ : _____
REFERENCE LATEST ERECTION DRAWINGS FOR MATERIAL & FABRICATION INFORMATION

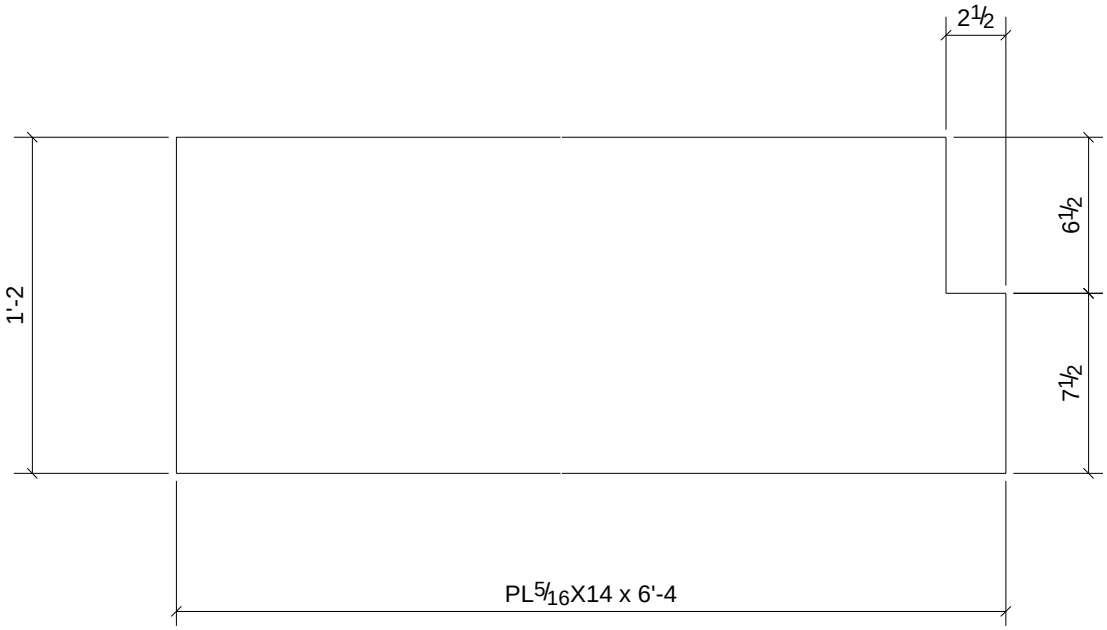

1	L49
Qty.	In Assembly

Qty.	Mark	Size	Length	Comments	Grade
1	p69	PL5/16"X14"	6'-4"		A36

PROJECT NAME
OLDE ORCHARD ELEMENTARY SCHOOL

LOCATION
800 McNAUGHTEN RD. COLUMBUS, OHIO 43213

CUSTOMER
THOMAS AND MARKER CONSTRUCTION

ARCHITECT
BRAUN & STEIDL

NORTH CENTRAL FABRICATION
Mansfield, OH 44906
419-529-2744 FAX 419-529-5387 http://www.northcentralfabri

AISC CERTIFIED FABRICATOR

DESCRIPTION
PLATE

DATE	DATE	JOB No.
05/23/2011		70234
DRAWN BY	DRAWN BY	DRG No.
TMc	TAN	p69

MATERIAL NOTE:
W-SHAPES, CHANNELS: ASTM A992
ANGLES, S-SHAPES: ASTM A36
PLATE AND BAR: ASTM A36
PIPE: ASTM A53, GRADE B
HSS: ASTM A500, GRADE B

PROCESS CONTROL
PROCESS BY
FAB: _____
FIT AND WELD: _____
INSPECTION: _____
OTHER (IF NEEDED) _____
_____ : _____
_____ : _____
_____ : _____
_____ : _____
REFERENCE LATEST ERECTION DRAWINGS FOR MATERIAL & FABRICATION INFORMATION

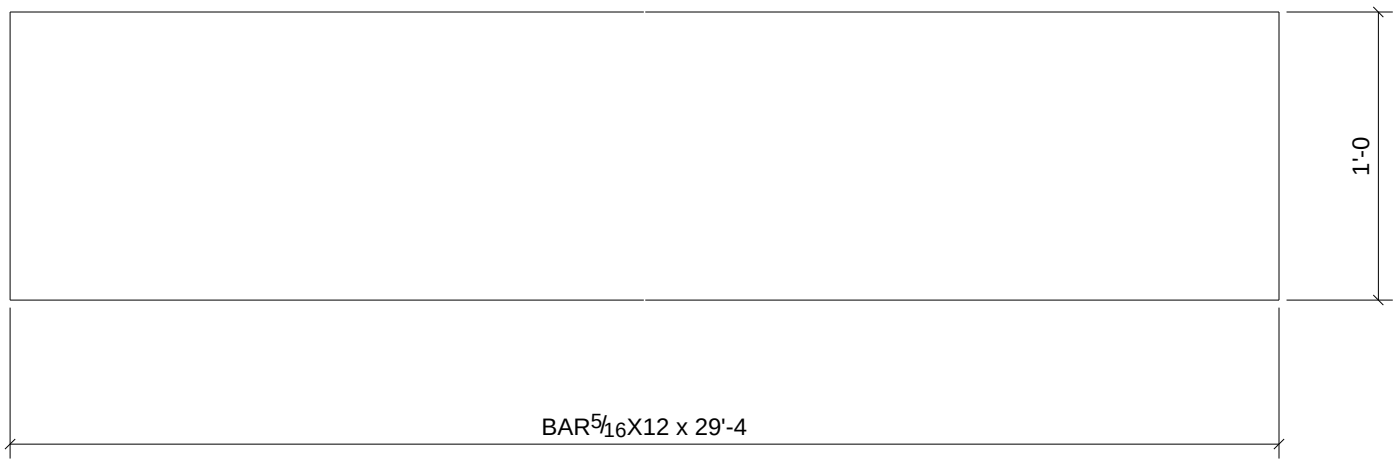

Qty.	In Assembly
1	B118

Qty.	Mark	Size	Length	Comments	Grade
1	p75	BAR5/16"X12"	29'-4"		A36

PROJECT NAME
OLDE ORCHARD ELEMENTARY SCHOOL

LOCATION
800 McNAUGHTEN RD. COLUMBUS, OHIO 43213

CUSTOMER
THOMAS AND MARKER CONSTRUCTION

ARCHITECT
BRAUN & STEIDL

NORTH CENTRAL FABRICATION
Mansfield, OH 44906
419-529-2744 FAX 419-529-5387 http://www.northcentralfabri

AISC CERTIFIED FABRICATOR

DESCRIPTION
PLATE

DATE	DATE	JOB No.
05/23/2011		70234
DRAWN BY	DRAWN BY	DRG No.
TMc	TAN	p75

MATERIAL NOTE:
W-SHAPES, CHANNELS: ASTM A992
ANGLES, S-SHAPES: ASTM A36
PLATE AND BAR: ASTM A36
PIPE: ASTM A53, GRADE B
HSS: ASTM A500, GRADE B

PROCESS CONTROL
PROCESS BY
FAB: _____
FIT AND WELD: _____
INSPECTION: _____
OTHER (IF NEEDED) _____
_____ : _____
_____ : _____
_____ : _____
_____ : _____
REFERENCE LATEST ERECTION DRAWINGS FOR MATERIAL & FABRICATION INFORMATION

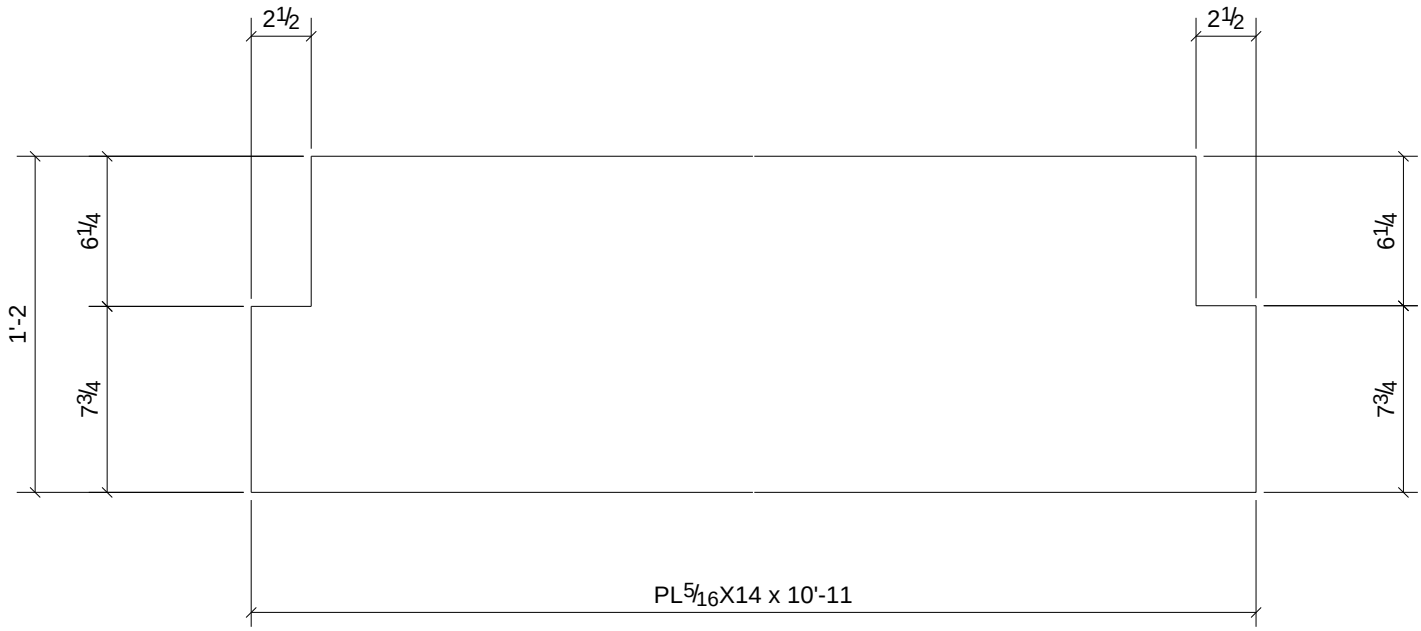

Qty.	In Assembly
2	L31

Qty.	Mark	Size	Length	Comments	Grade
2	p77	PL5/16"X14"	10'-11"		A36

PROJECT NAME
OLDE ORCHARD ELEMENTARY SCHOOL

LOCATION
800 McNAUGHTEN RD. COLUMBUS, OHIO 43213

CUSTOMER
THOMAS AND MARKER CONSTRUCTION

ARCHITECT
BRAUN & STEIDL

NORTH CENTRAL FABRICATION
Mansfield, OH 44906
419-529-2744 FAX 419-529-5387 http://www.northcentralfabri

AISC CERTIFIED FABRICATOR

DESCRIPTION
PLATE

DATE	DATE	JOB No.
05/23/2011		70234
DRAWN BY	DRAWN BY	DRG No.
TMc	TAN	p77

MATERIAL NOTE:
W-SHAPES, CHANNELS: ASTM A992
ANGLES, S-SHAPES: ASTM A36
PLATE AND BAR: ASTM A36
PIPE: ASTM A53, GRADE B
HSS: ASTM A500, GRADE B

PROCESS CONTROL
PROCESS BY
FAB: _____
FIT AND WELD: _____
INSPECTION: _____
OTHER (IF NEEDED) _____
_____ : _____
_____ : _____
_____ : _____
_____ : _____
REFERENCE LATEST ERECTION DRAWINGS FOR MATERIAL & FABRICATION INFORMATION

1	L24
1	L26
Qty.	In Assembly

Qty.	Mark	Size	Length	Comments	Grade
2	p78	PL5/16"X14"	6'-6 1/2"		A36

PROJECT NAME
OLDE ORCHARD ELEMENTARY SCHOOL

LOCATION
800 McNAUGHTEN RD. COLUMBUS, OHIO 43213

CUSTOMER
THOMAS AND MARKER CONSTRUCTION

ARCHITECT
BRAUN & STEIDL

NORTH CENTRAL FABRICATION
Mansfield, OH 44906
419-529-2744 FAX 419-529-5387 http://www.northcentralfabri

AISC CERTIFIED FABRICATOR

DESCRIPTION
PLATE

DATE	DATE	JOB No.
05/23/2011		70234
DRAWN BY	DRAWN BY	DRG No.
TMc	TAN	p78

MATERIAL NOTE:
W-SHAPES, CHANNELS: ASTM A992
ANGLES, S-SHAPES: ASTM A36
PLATE AND BAR: ASTM A36
PIPE: ASTM A53, GRADE B
HSS: ASTM A500, GRADE B

PROCESS CONTROL
PROCESS BY
FAB: _____
FIT AND WELD: _____
INSPECTION: _____
OTHER (IF NEEDED) _____
_____ : _____
_____ : _____
_____ : _____
_____ : _____
REFERENCE LATEST ERECTION DRAWINGS FOR MATERIAL & FABRICATION INFORMATION

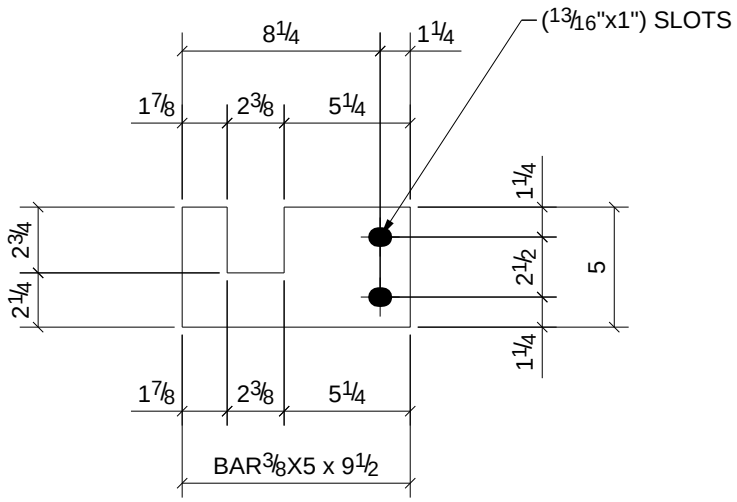

1	C8
2	C9
1	C11
Qty.	In Assembly

Qty.	Mark	Size	Length	Comments	Grade
4	p83	BAR3/8"X5"	0'-9 1/2"		A992

PROJECT NAME
OLDE ORCHARD ELEMENTARY SCHOOL

LOCATION
800 McNAUGHTEN RD. COLUMBUS, OHIO 43213

CUSTOMER
THOMAS AND MARKER CONSTRUCTION

ARCHITECT
BRAUN & STEIDL

NORTH CENTRAL FABRICATION
Mansfield, OH 44906
419-529-2744 FAX 419-529-5387 http://www.northcentralfabri

AISC CERTIFIED FABRICATOR

DESCRIPTION
PLATE

DATE	DATE	JOB No.
05/27/2011		70234
DRAWN BY	DRAWN BY	DRG No.
TMc	TAN	p83

MATERIAL NOTE:
W-SHAPES, CHANNELS: ASTM A992
ANGLES, S-SHAPES: ASTM A36
PLATE AND BAR: ASTM A36
PIPE: ASTM A53, GRADE B
HSS: ASTM A500, GRADE B

PROCESS CONTROL
PROCESS BY
FAB: _____
FIT AND WELD: _____
INSPECTION: _____
OTHER (IF NEEDED) _____
_____ : _____
_____ : _____
_____ : _____
_____ : _____
REFERENCE LATEST ERECTION DRAWINGS FOR MATERIAL & FABRICATION INFORMATION

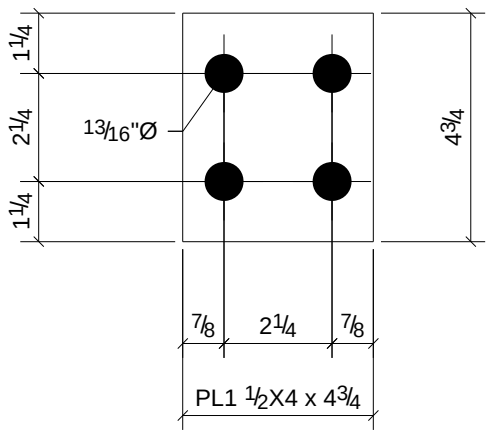

Qty.	In Assembly
1	B114

Qty.	Mark	Size	Length	Comments	Grade
1	p85	PL1 1/2"X4"	0'-4 3/4"		A36

PROJECT NAME
OLDE ORCHARD ELEMENTARY SCHOOL

LOCATION
800 McNAUGHTEN RD. COLUMBUS, OHIO 43213

CUSTOMER
THOMAS AND MARKER CONSTRUCTION

ARCHITECT
BRAUN & STEIDL

NORTH CENTRAL FABRICATION
Mansfield, OH 44906
419-529-2744 FAX 419-529-5387 http://www.northcentralfabri

AISC CERTIFIED FABRICATOR

DESCRIPTION	DATE	DATE	JOB No.
PLATE	05/23/2011		70234
	DRAWN BY TMc	DRAWN BY TAN	DRG No. p85

MATERIAL NOTE:
W-SHAPES, CHANNELS: ASTM A992
ANGLES, S-SHAPES: ASTM A36
PLATE AND BAR: ASTM A36
PIPE: ASTM A53, GRADE B
HSS: ASTM A500, GRADE B

PROCESS CONTROL
PROCESS BY
FAB: _____
FIT AND WELD: _____
INSPECTION: _____
OTHER (IF NEEDED) _____
_____ : _____
_____ : _____
_____ : _____
_____ : _____
REFERENCE LATEST ERECTION DRAWINGS FOR MATERIAL & FABRICATION INFORMATION

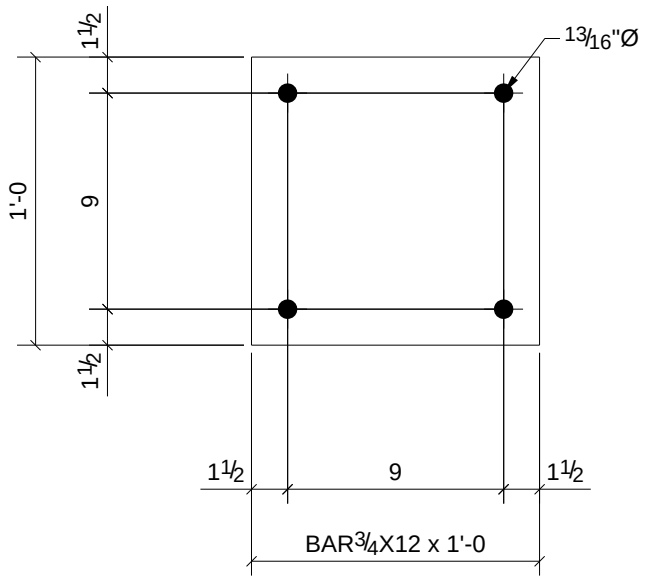

1	C25
1	C26
Qty.	In Assembly

Qty.	Mark	Size	Length	Comments	Grade
2	p86	BAR3/4"X12"	1'-0"		A36

PROJECT NAME
OLDE ORCHARD ELEMENTARY SCHOOL

LOCATION
800 McNAUGHTEN RD. COLUMBUS, OHIO 43213

CUSTOMER
THOMAS AND MARKER CONSTRUCTION

ARCHITECT
BRAUN & STEIDL

NORTH CENTRAL FABRICATION
Mansfield, OH 44906
419-529-2744 FAX 419-529-5387 http://www.northcentralfabri

AISC CERTIFIED FABRICATOR

DESCRIPTION
PLATE

DATE	DATE	JOB No.
05/23/2011		70234
DRAWN BY	DRAWN BY	DRG No.
TMc	TAN	p86

MATERIAL NOTE:
W-SHAPES, CHANNELS: ASTM A992
ANGLES, S-SHAPES: ASTM A36
PLATE AND BAR: ASTM A36
PIPE: ASTM A53, GRADE B
HSS: ASTM A500, GRADE B

PROCESS CONTROL
PROCESS BY
FAB: _____
FIT AND WELD: _____
INSPECTION: _____
OTHER (IF NEEDED) _____
_____ : _____
_____ : _____
_____ : _____
_____ : _____
REFERENCE LATEST ERECTION DRAWINGS FOR MATERIAL & FABRICATION INFORMATION

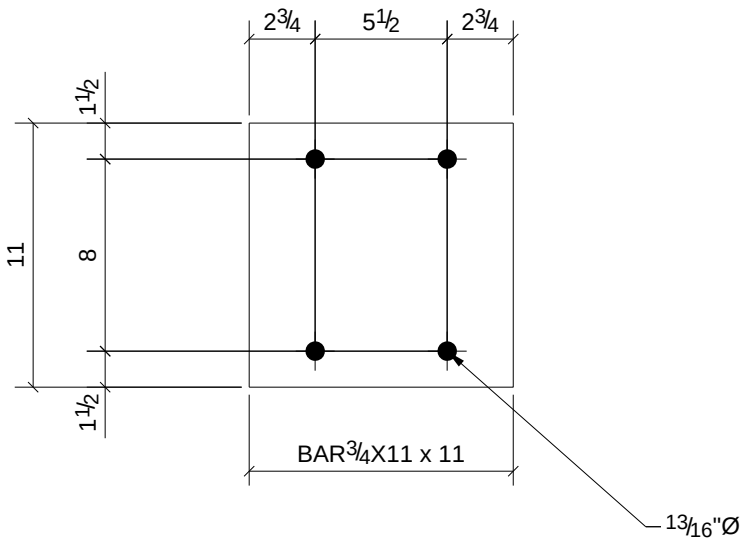

1	C35
1	C37
1	C39
1	C40
1	C42
Qty.	In Assembly

Qty.	Mark	Size	Length	Comments	Grade
5	p87	BAR3/4"X11"	0'-11"		A36

PROJECT NAME
OLDE ORCHARD ELEMENTARY SCHOOL

LOCATION
800 McNAUGHTEN RD. COLUMBUS, OHIO 43213

CUSTOMER
THOMAS AND MARKER CONSTRUCTION

ARCHITECT
BRAUN & STEIDL

NORTH CENTRAL FABRICATION
Mansfield, OH 44906
419-529-2744 FAX 419-529-5387 http://www.northcentralfabri

AISC CERTIFIED FABRICATOR

DESCRIPTION	DATE	DATE	JOB No.
PLATE	05/23/2011		70234
	DRAWN BY TMc	DRAWN BY TAN	DRG No. p87

MATERIAL NOTE:
W-SHAPES, CHANNELS: ASTM A992
ANGLES, S-SHAPES: ASTM A36
PLATE AND BAR: ASTM A36
PIPE: ASTM A53, GRADE B
HSS: ASTM A500, GRADE B

PROCESS CONTROL
PROCESS BY
FAB: _____
FIT AND WELD: _____
INSPECTION: _____
OTHER (IF NEEDED) _____
_____ : _____
_____ : _____
_____ : _____
_____ : _____
REFERENCE LATEST ERECTION DRAWINGS FOR MATERIAL & FABRICATION INFORMATION

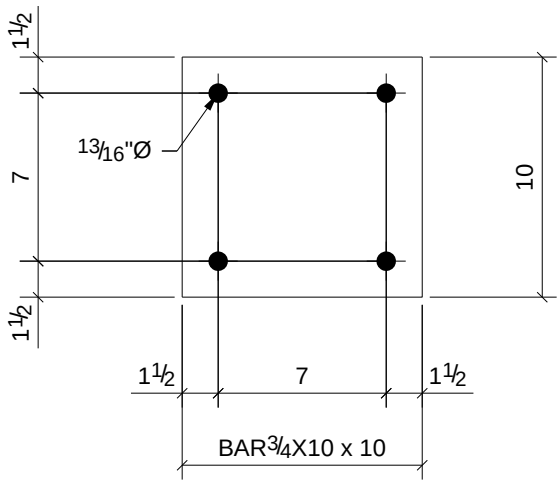

1	C5
5	C7
4	C10
Qty.	In Assembly

Qty.	Mark	Size	Length	Comments	Grade
10	p88	BAR3/4"X10"	0'-10"		A36

PROJECT NAME
OLDE ORCHARD ELEMENTARY SCHOOL

LOCATION
800 McNAUGHTEN RD. COLUMBUS, OHIO 43213

CUSTOMER
THOMAS AND MARKER CONSTRUCTION

ARCHITECT
BRAUN & STEIDL

NORTH CENTRAL FABRICATION
Mansfield, OH 44906
419-529-2744 FAX 419-529-5387 http://www.northcentralfabri

AISC CERTIFIED FABRICATOR

DESCRIPTION
PLATE

DATE	DATE	JOB No.
05/23/2011		70234
DRAWN BY	DRAWN BY	DRG No.
TMc	TAN	p88

MATERIAL NOTE:
W-SHAPES, CHANNELS: ASTM A992
ANGLES, S-SHAPES: ASTM A36
PLATE AND BAR: ASTM A36
PIPE: ASTM A53, GRADE B
HSS: ASTM A500, GRADE B

PROCESS CONTROL
PROCESS BY
FAB: _____
FIT AND WELD: _____
INSPECTION: _____
OTHER (IF NEEDED) _____
_____ : _____
_____ : _____
_____ : _____
_____ : _____
REFERENCE LATEST ERECTION DRAWINGS FOR MATERIAL & FABRICATION INFORMATION

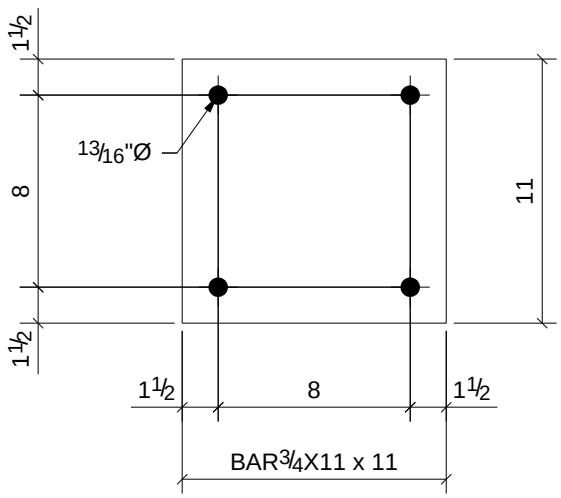

1	C3
1	C29
Qty.	In Assembly

Qty.	Mark	Size	Length	Comments	Grade
2	p89	BAR3/4"X11"	0'-11"		A36

PROJECT NAME
OLDE ORCHARD ELEMENTARY SCHOOL

LOCATION
800 McNAUGHTEN RD. COLUMBUS, OHIO 43213

CUSTOMER
THOMAS AND MARKER CONSTRUCTION

ARCHITECT
BRAUN & STEIDL

NORTH CENTRAL FABRICATION
Mansfield, OH 44906
419-529-2744 FAX 419-529-5387 http://www.northcentralfabri

AISC CERTIFIED FABRICATOR

DESCRIPTION
PLATE

DATE	DATE	JOB No.
05/23/2011		70234
DRAWN BY	DRAWN BY	DRG No.
TMc	TAN	p89

MATERIAL NOTE:
W-SHAPES, CHANNELS: ASTM A992
ANGLES, S-SHAPES: ASTM A36
PLATE AND BAR: ASTM A36
PIPE: ASTM A53, GRADE B
HSS: ASTM A500, GRADE B

PROCESS CONTROL
PROCESS BY
FAB: _____
FIT AND WELD: _____
INSPECTION: _____
OTHER (IF NEEDED) _____
_____ : _____
_____ : _____
_____ : _____
_____ : _____
REFERENCE LATEST ERECTION DRAWINGS FOR MATERIAL & FABRICATION INFORMATION

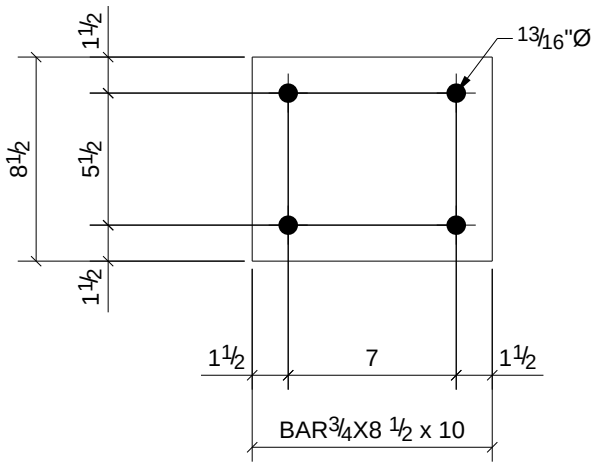

1	C12
Qty.	In Assembly

Qty.	Mark	Size	Length	Comments	Grade
1	p90	BAR3/4"X8 1/2"	0'-10"		A36

PROJECT NAME
OLDE ORCHARD ELEMENTARY SCHOOL

LOCATION
800 McNAUGHTEN RD. COLUMBUS, OHIO 43213

CUSTOMER
THOMAS AND MARKER CONSTRUCTION

ARCHITECT
BRAUN & STEIDL

NORTH CENTRAL FABRICATION
Mansfield, OH 44906
419-529-2744 FAX 419-529-5387 http://www.northcentralfabri

AISC CERTIFIED FABRICATOR

DESCRIPTION	DATE	DATE	JOB No.
PLATE	05/23/2011		70234
	DRAWN BY TMc	DRAWN BY TAN	DRG No. p90

MATERIAL NOTE:
W-SHAPES, CHANNELS: ASTM A992
ANGLES, S-SHAPES: ASTM A36
PLATE AND BAR: ASTM A36
PIPE: ASTM A53, GRADE B
HSS: ASTM A500, GRADE B

PROCESS CONTROL
PROCESS BY
FAB: _____
FIT AND WELD: _____
INSPECTION: _____
OTHER (IF NEEDED) _____
_____ : _____
_____ : _____
_____ : _____
_____ : _____
REFERENCE LATEST ERECTION DRAWINGS FOR MATERIAL & FABRICATION INFORMATION

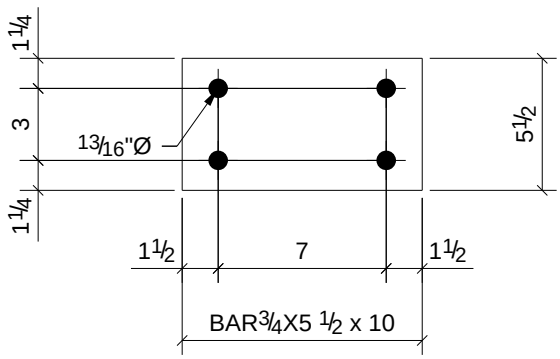

1	C19
Qty.	In Assembly

Qty.	Mark	Size	Length	Comments	Grade
1	p91	BAR3/4"X5 1/2"	0'-10"		A36

PROJECT NAME
OLDE ORCHARD ELEMENTARY SCHOOL

LOCATION
800 McNAUGHTEN RD. COLUMBUS, OHIO 43213

CUSTOMER
THOMAS AND MARKER CONSTRUCTION

ARCHITECT
BRAUN & STEIDL

NORTH CENTRAL FABRICATION
Mansfield, OH 44906
419-529-2744 FAX 419-529-5387 http://www.northcentralfabri

AISC CERTIFIED FABRICATOR

DESCRIPTION	DATE	DATE	JOB No.
PLATE	05/23/2011		70234
	DRAWN BY TMc	DRAWN BY TAN	DRG No. p91

MATERIAL NOTE:
W-SHAPES, CHANNELS: ASTM A992
ANGLES, S-SHAPES: ASTM A36
PLATE AND BAR: ASTM A36
PIPE: ASTM A53, GRADE B
HSS: ASTM A500, GRADE B

PROCESS CONTROL
PROCESS BY
FAB: _____
FIT AND WELD: _____
INSPECTION: _____
OTHER (IF NEEDED) _____
_____ : _____
_____ : _____
_____ : _____
_____ : _____
REFERENCE LATEST ERECTION DRAWINGS FOR MATERIAL & FABRICATION INFORMATION

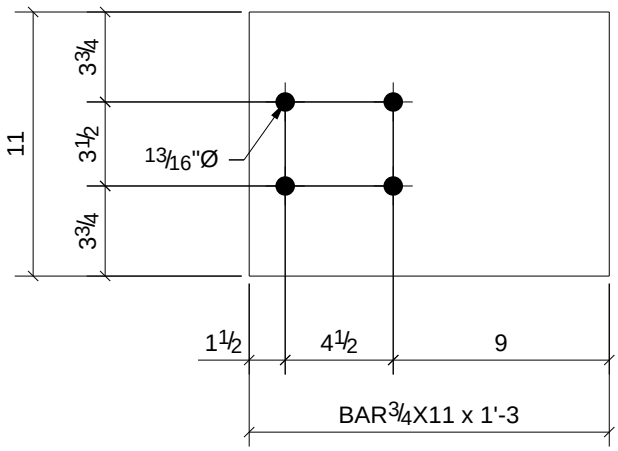

Qty.	In Assembly
1	C21

Qty.	Mark	Size	Length	Comments	Grade
1	p92	BAR3/4"X11"	1'-3"		A36

PROJECT NAME
OLDE ORCHARD ELEMENTARY SCHOOL

LOCATION
800 McNAUGHTEN RD. COLUMBUS, OHIO 43213

CUSTOMER
THOMAS AND MARKER CONSTRUCTION

ARCHITECT
BRAUN & STEIDL

NORTH CENTRAL FABRICATION
Mansfield, OH 44906
419-529-2744 FAX 419-529-5387 http://www.northcentralfabri

AISC CERTIFIED FABRICATOR

DESCRIPTION	DATE	DATE	JOB No.
PLATE	05/23/2011		70234
	DRAWN BY TMc	DRAWN BY TAN	DRG No. p92

MATERIAL NOTE:
W-SHAPES, CHANNELS: ASTM A992
ANGLES, S-SHAPES: ASTM A36
PLATE AND BAR: ASTM A36
PIPE: ASTM A53, GRADE B
HSS: ASTM A500, GRADE B

PROCESS CONTROL
PROCESS BY
FAB: _____
FIT AND WELD: _____
INSPECTION: _____
OTHER (IF NEEDED) _____
_____ : _____
_____ : _____
_____ : _____
_____ : _____
REFERENCE LATEST ERECTION DRAWINGS FOR MATERIAL & FABRICATION INFORMATION

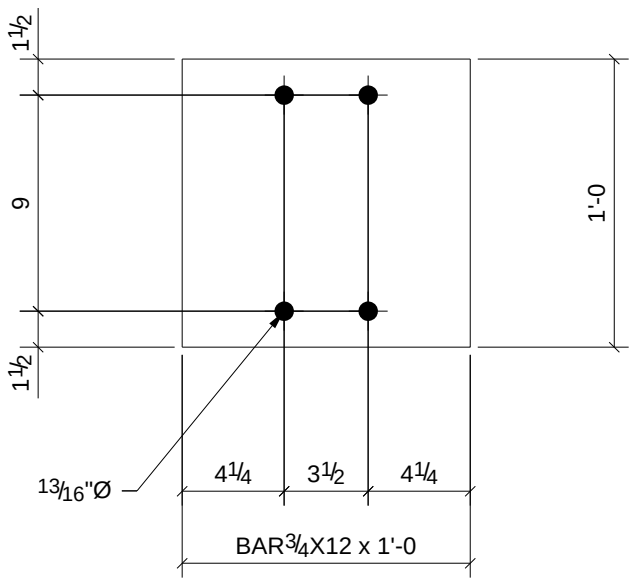

1	C30
1	C33
Qty.	In Assembly

Qty.	Mark	Size	Length	Comments	Grade
2	p93	BAR3/4"X12"	1'-0"		A36

PROJECT NAME
OLDE ORCHARD ELEMENTARY SCHOOL

LOCATION
800 McNAUGHTEN RD. COLUMBUS, OHIO 43213

CUSTOMER
THOMAS AND MARKER CONSTRUCTION

ARCHITECT
BRAUN & STEIDL

NORTH CENTRAL FABRICATION
Mansfield, OH 44906
419-529-2744 FAX 419-529-5387 http://www.northcentralfabri

AISC CERTIFIED FABRICATOR

DESCRIPTION
PLATE

DATE	DATE	JOB No.
05/23/2011		70234
DRAWN BY	DRAWN BY	DRG No.
TMc	TAN	p93

MATERIAL NOTE:
W-SHAPES, CHANNELS: ASTM A992
ANGLES, S-SHAPES: ASTM A36
PLATE AND BAR: ASTM A36
PIPE: ASTM A53, GRADE B
HSS: ASTM A500, GRADE B

PROCESS CONTROL
PROCESS BY
FAB: _____
FIT AND WELD: _____
INSPECTION: _____
OTHER (IF NEEDED) _____
_____ : _____
_____ : _____
_____ : _____
_____ : _____
REFERENCE LATEST ERECTION DRAWINGS FOR MATERIAL & FABRICATION INFORMATION

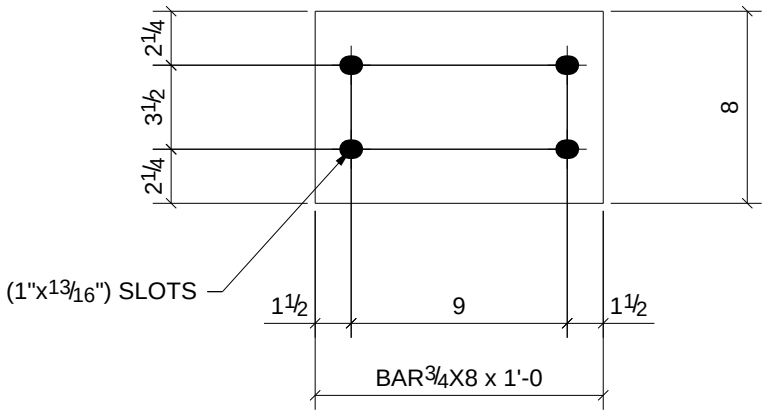

2	C16
Qty.	In Assembly

Qty.	Mark	Size	Length	Comments	Grade
2	p94	BAR3/4"X8"	1'-0"		A36

PROJECT NAME
OLDE ORCHARD ELEMENTARY SCHOOL

LOCATION
800 McNAUGHTEN RD. COLUMBUS, OHIO 43213

CUSTOMER
THOMAS AND MARKER CONSTRUCTION

ARCHITECT
BRAUN & STEIDL

NORTH CENTRAL FABRICATION
Mansfield, OH 44906
419-529-2744 FAX 419-529-5387 http://www.northcentralfabri

AISC CERTIFIED FABRICATOR

DESCRIPTION
PLATE

DATE	DATE	JOB No.
05/27/2011		70234
DRAWN BY	DRAWN BY	DRG No.
TMc	TAN	p94

MATERIAL NOTE:
W-SHAPES, CHANNELS: ASTM A992
ANGLES, S-SHAPES: ASTM A36
PLATE AND BAR: ASTM A36
PIPE: ASTM A53, GRADE B
HSS: ASTM A500, GRADE B

PROCESS CONTROL
PROCESS BY
FAB: _____
FIT AND WELD: _____
INSPECTION: _____
OTHER (IF NEEDED) _____
_____ : _____
_____ : _____
_____ : _____
_____ : _____
REFERENCE LATEST ERECTION DRAWINGS FOR MATERIAL & FABRICATION INFORMATION

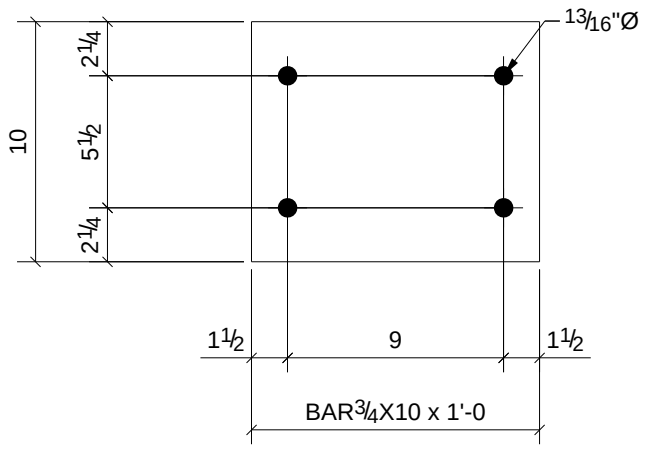

Qty.	Mark	Size	Length	Comments	Grade
1	p95	BAR3/4"X10"	1'-0"		A36

Qty.	In Assembly
1	C33

PROJECT NAME
OLDE ORCHARD ELEMENTARY SCHOOL

LOCATION
800 McNAUGHTEN RD. COLUMBUS, OHIO 43213

CUSTOMER
THOMAS AND MARKER CONSTRUCTION

ARCHITECT
BRAUN & STEIDL

NORTH CENTRAL FABRICATION
Mansfield, OH 44906
419-529-2744 FAX 419-529-5387 http://www.northcentralfabri

AISC CERTIFIED FABRICATOR

DESCRIPTION	DATE	DATE	JOB No.
PLATE	05/23/2011		70234
	DRAWN BY TMc	DRAWN BY TAN	DRG No. p95

MATERIAL NOTE:
W-SHAPES, CHANNELS: ASTM A992
ANGLES, S-SHAPES: ASTM A36
PLATE AND BAR: ASTM A36
PIPE: ASTM A53, GRADE B
HSS: ASTM A500, GRADE B

PROCESS CONTROL
PROCESS BY
FAB: _____
FIT AND WELD: _____
INSPECTION: _____
OTHER (IF NEEDED) _____
_____ : _____
_____ : _____
_____ : _____
_____ : _____
REFERENCE LATEST ERECTION DRAWINGS FOR MATERIAL & FABRICATION INFORMATION

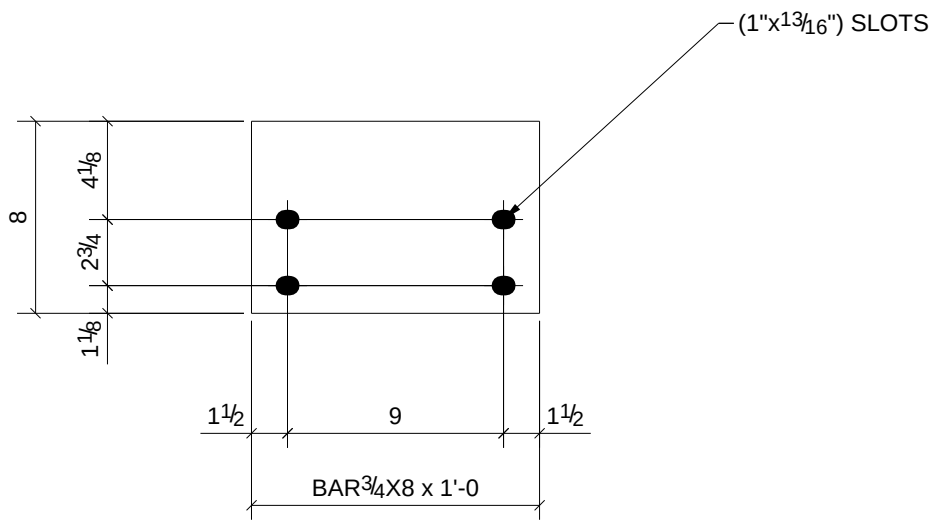

1	C21
Qty.	In Assembly

Qty.	Mark	Size	Length	Comments	Grade
1	p97	BAR3/4"X8"	1'-0"		A36

PROJECT NAME
OLDE ORCHARD ELEMENTARY SCHOOL

LOCATION
800 McNAUGHTEN RD. COLUMBUS, OHIO 43213

CUSTOMER
THOMAS AND MARKER CONSTRUCTION

ARCHITECT
BRAUN & STEIDL

NORTH CENTRAL FABRICATION
Mansfield, OH 44906
419-529-2744 FAX 419-529-5387 http://www.northcentralfabri

AISC CERTIFIED FABRICATOR

DESCRIPTION
PLATE

DATE	DATE	JOB No.
05/23/2011		70234
DRAWN BY	DRAWN BY	DRG No.
TMc	TAN	p97

MATERIAL NOTE:
W-SHAPES, CHANNELS: ASTM A992
ANGLES, S-SHAPES: ASTM A36
PLATE AND BAR: ASTM A36
PIPE: ASTM A53, GRADE B
HSS: ASTM A500, GRADE B

PROCESS CONTROL
PROCESS BY
FAB: _____
FIT AND WELD: _____
INSPECTION: _____
OTHER (IF NEEDED) _____
_____ : _____
_____ : _____
_____ : _____
_____ : _____
REFERENCE LATEST ERECTION DRAWINGS FOR MATERIAL & FABRICATION INFORMATION

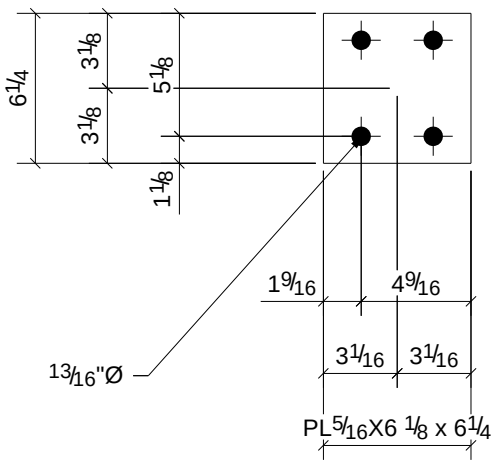

1	B126
Qty.	In Assembly

Qty.	Mark	Size	Length	Comments	Grade
1	p102	PL5/16"X6 1/8"	0'-6 1/4"		A36

PROJECT NAME
OLDE ORCHARD ELEMENTARY SCHOOL

LOCATION
800 McNAUGHTEN RD. COLUMBUS, OHIO 43213

CUSTOMER
THOMAS AND MARKER CONSTRUCTION

ARCHITECT
BRAUN & STEIDL

NORTH CENTRAL FABRICATION
Mansfield, OH 44906
419-529-2744 FAX 419-529-5387 http://www.northcentralfabri

AISC CERTIFIED FABRICATOR

DESCRIPTION
PLATE

DATE	DATE	JOB No.
05/23/2011		70234
DRAWN BY	DRAWN BY	DRG No.
TMc	TAN	p102

MATERIAL NOTE:
W-SHAPES, CHANNELS: ASTM A992
ANGLES, S-SHAPES: ASTM A36
PLATE AND BAR: ASTM A36
PIPE: ASTM A53, GRADE B
HSS: ASTM A500, GRADE B

PROCESS CONTROL
PROCESS BY
FAB: _____
FIT AND WELD: _____
INSPECTION: _____
OTHER (IF NEEDED) _____
_____ : _____
_____ : _____
_____ : _____
_____ : _____
REFERENCE LATEST ERECTION DRAWINGS FOR MATERIAL & FABRICATION INFORMATION

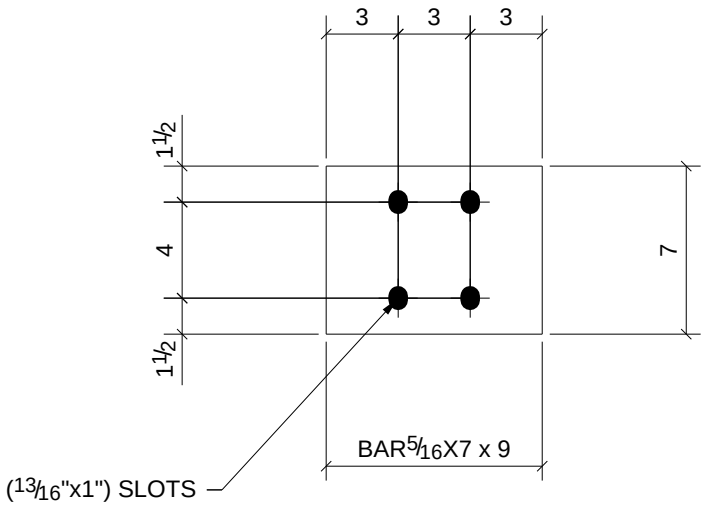

1	B84
Qty.	In Assembly

Qty.	Mark	Size	Length	Comments	Grade
1	p103	BAR5/16"X7"	0'-9"		A36

PROJECT NAME
OLDE ORCHARD ELEMENTARY SCHOOL

LOCATION
800 McNAUGHTEN RD. COLUMBUS, OHIO 43213

CUSTOMER
THOMAS AND MARKER CONSTRUCTION

ARCHITECT
BRAUN & STEIDL

NORTH CENTRAL FABRICATION
Mansfield, OH 44906
419-529-2744 FAX 419-529-5387 http://www.northcentralfabri

AISC CERTIFIED FABRICATOR

DESCRIPTION	DATE	DATE	JOB No.
PLATE	05/23/2011		70234
	DRAWN BY TMc	DRAWN BY TAN	DRG No. p103

MATERIAL NOTE:
W-SHAPES, CHANNELS: ASTM A992
ANGLES, S-SHAPES: ASTM A36
PLATE AND BAR: ASTM A36
PIPE: ASTM A53, GRADE B
HSS: ASTM A500, GRADE B

PROCESS CONTROL
PROCESS BY
FAB: _____
FIT AND WELD: _____
INSPECTION: _____
OTHER (IF NEEDED) _____
_____ : _____
_____ : _____
_____ : _____
_____ : _____
REFERENCE LATEST ERECTION DRAWINGS FOR MATERIAL & FABRICATION INFORMATION

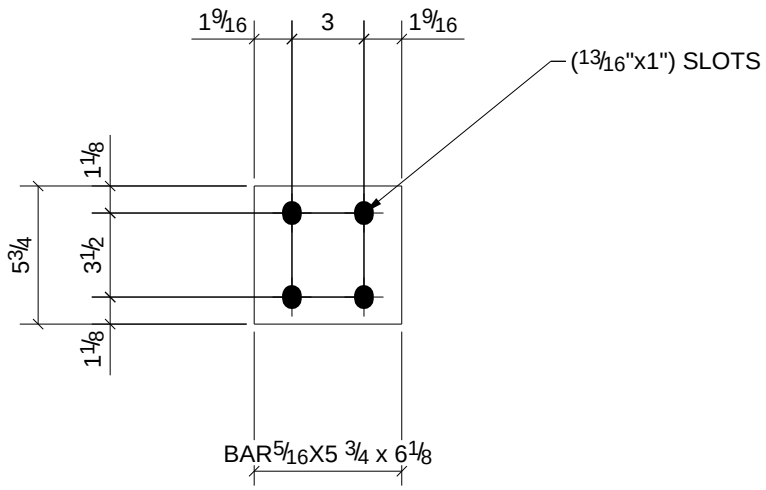

1	B82
Qty.	In Assembly

Qty.	Mark	Size	Length	Comments	Grade
1	p104	BAR5/16"X5 3/4"	0'-6 1/8"		A36

PROJECT NAME
OLDE ORCHARD ELEMENTARY SCHOOL

LOCATION
800 McNAUGHTEN RD. COLUMBUS, OHIO 43213

CUSTOMER
THOMAS AND MARKER CONSTRUCTION

ARCHITECT
BRAUN & STEIDL

NORTH CENTRAL FABRICATION
Mansfield, OH 44906
419-529-2744 FAX 419-529-5387 http://www.northcentralfabri

AISC CERTIFIED FABRICATOR

DESCRIPTION	DATE	DATE	JOB No.
PLATE	05/23/2011		70234
	DRAWN BY TMc	DRAWN BY TAN	DRG No. p104

MATERIAL NOTE:
W-SHAPES, CHANNELS: ASTM A992
ANGLES, S-SHAPES: ASTM A36
PLATE AND BAR: ASTM A36
PIPE: ASTM A53, GRADE B
HSS: ASTM A500, GRADE B

PROCESS CONTROL
PROCESS BY
FAB: _____
FIT AND WELD: _____
INSPECTION: _____
OTHER (IF NEEDED) _____
_____ : _____
_____ : _____
_____ : _____
_____ : _____
REFERENCE LATEST ERECTION DRAWINGS FOR MATERIAL & FABRICATION INFORMATION

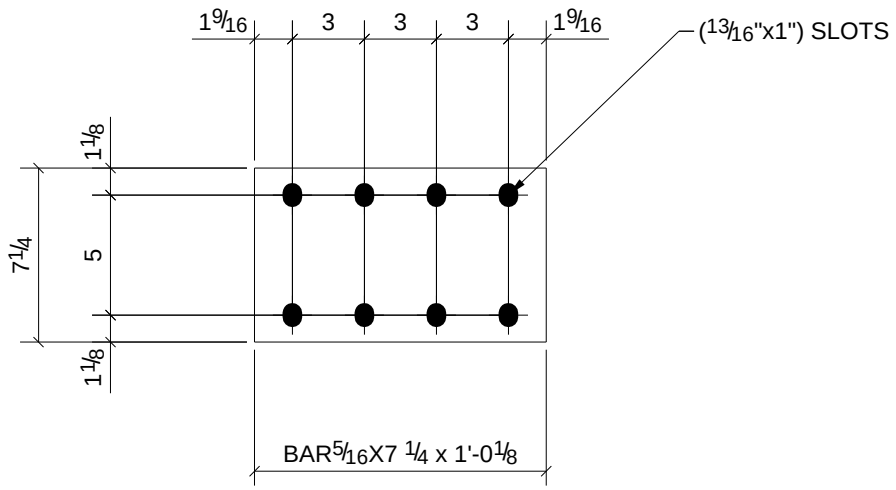

1	B123
1	B124
Qty.	In Assembly

Qty.	Mark	Size	Length	Comments	Grade
2	p105	BAR5/16"X7 1/4"	1'-0 1/8"		A36

PROJECT NAME
OLDE ORCHARD ELEMENTARY SCHOOL

LOCATION
800 McNAUGHTEN RD. COLUMBUS, OHIO 43213

CUSTOMER
THOMAS AND MARKER CONSTRUCTION

ARCHITECT
BRAUN & STEIDL

NORTH CENTRAL FABRICATION
Mansfield, OH 44906
419-529-2744 FAX 419-529-5387 http://www.northcentralfabri

AISC CERTIFIED FABRICATOR

DESCRIPTION
PLATE

DATE	DATE	JOB No.
05/23/2011		70234
DRAWN BY	DRAWN BY	DRG No.
TMc	TAN	p105

MATERIAL NOTE:
W-SHAPES, CHANNELS: ASTM A992
ANGLES, S-SHAPES: ASTM A36
PLATE AND BAR: ASTM A36
PIPE: ASTM A53, GRADE B
HSS: ASTM A500, GRADE B

PROCESS CONTROL
PROCESS BY
FAB: _____
FIT AND WELD: _____
INSPECTION: _____
OTHER (IF NEEDED) _____
_____ : _____
_____ : _____
_____ : _____
_____ : _____
REFERENCE LATEST ERECTION DRAWINGS FOR MATERIAL & FABRICATION INFORMATION

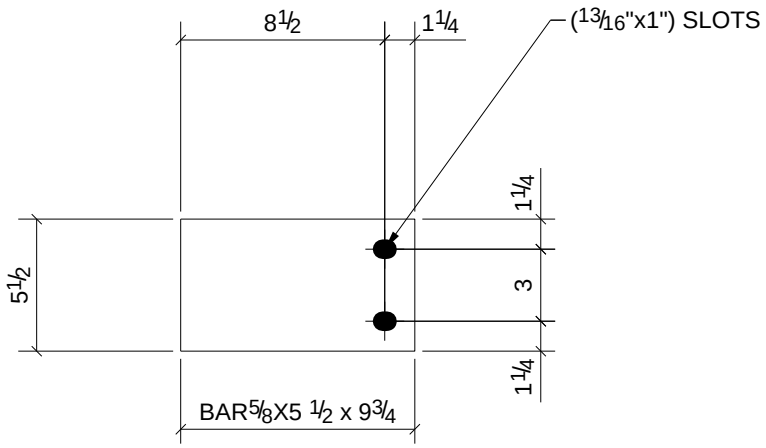

1	C26
Qty.	In Assembly

Qty.	Mark	Size	Length	Comments	Grade
1	p106	BAR5/8"X5 1/2"	0'-9 3/4"		A992

PROJECT NAME
OLDE ORCHARD ELEMENTARY SCHOOL

LOCATION
800 McNAUGHTEN RD. COLUMBUS, OHIO 43213

CUSTOMER
THOMAS AND MARKER CONSTRUCTION

ARCHITECT
BRAUN & STEIDL

NORTH CENTRAL FABRICATION
Mansfield, OH 44906
419-529-2744 FAX 419-529-5387 http://www.northcentralfabri

AISC CERTIFIED FABRICATOR

DESCRIPTION
PLATE

DATE	DATE	JOB No.
05/23/2011		70234
DRAWN BY	DRAWN BY	DRG No.
TMc	TAN	p106

MATERIAL NOTE:
W-SHAPES, CHANNELS: ASTM A992
ANGLES, S-SHAPES: ASTM A36
PLATE AND BAR: ASTM A36
PIPE: ASTM A53, GRADE B
HSS: ASTM A500, GRADE B

PROCESS CONTROL
PROCESS BY
FAB: _____
FIT AND WELD: _____
INSPECTION: _____
OTHER (IF NEEDED) _____
_____ : _____
_____ : _____
_____ : _____
_____ : _____
REFERENCE LATEST ERECTION DRAWINGS FOR MATERIAL & FABRICATION INFORMATION

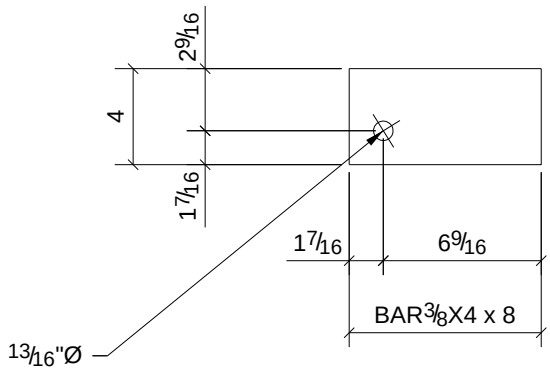

2	D10
7	D11
Qty.	In Assembly

Qty.	Mark	Size	Length	Comments	Grade
9	p117	BAR3/8"X4"	0'-8"		A36

PROJECT NAME
OLDE ORCHARD ELEMENTARY SCHOOL

LOCATION
800 McNAUGHTEN RD. COLUMBUS, OHIO 43213

CUSTOMER
THOMAS AND MARKER CONSTRUCTION

ARCHITECT
BRAUN & STEIDL

NORTH CENTRAL FABRICATION
Mansfield, OH 44906
419-529-2744 FAX 419-529-5387 http://www.northcentralfabri

AISC CERTIFIED FABRICATOR

DESCRIPTION
PLATE

DATE	DATE	JOB No.
05/23/2011		70234
DRAWN BY	DRAWN BY	DRG No.
TMc	TAN	p117

MATERIAL NOTE:
W-SHAPES, CHANNELS: ASTM A992
ANGLES, S-SHAPES: ASTM A36
PLATE AND BAR: ASTM A36
PIPE: ASTM A53, GRADE B
HSS: ASTM A500, GRADE B

PROCESS CONTROL
PROCESS BY
FAB: _____
FIT AND WELD: _____
INSPECTION: _____
OTHER (IF NEEDED) _____
_____ : _____
_____ : _____
_____ : _____
_____ : _____
REFERENCE LATEST ERECTION DRAWINGS FOR MATERIAL & FABRICATION INFORMATION

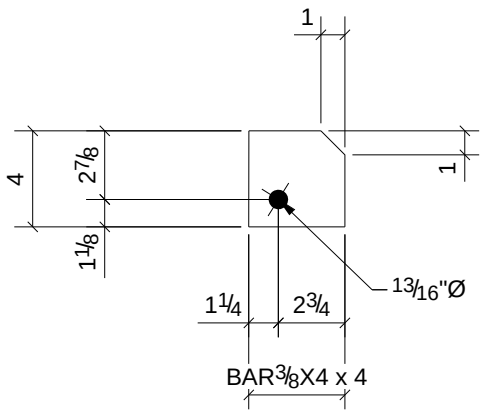

2	A8
2	A9
2	A10
2	A12
1	A13
Qty.	In Assembly

Qty.	Mark	Size	Length	Comments	Grade
9	p118	BAR3/8"X4"	0'-4"		A36

PROJECT NAME
OLDE ORCHARD ELEMENTARY SCHOOL

LOCATION
800 McNAUGHTEN RD. COLUMBUS, OHIO 43213

CUSTOMER
THOMAS AND MARKER CONSTRUCTION

ARCHITECT
BRAUN & STEIDL

NORTH CENTRAL FABRICATION
Mansfield, OH 44906
419-529-2744 FAX 419-529-5387 http://www.northcentralfabri

AISC CERTIFIED FABRICATOR

DESCRIPTION
PLATE

DATE	DATE	JOB No.
05/23/2011		70234
DRAWN BY	DRAWN BY	DRG No.
TMc	TAN	p118

MATERIAL NOTE:
W-SHAPES, CHANNELS: ASTM A992
ANGLES, S-SHAPES: ASTM A36
PLATE AND BAR: ASTM A36
PIPE: ASTM A53, GRADE B
HSS: ASTM A500, GRADE B

PROCESS CONTROL
PROCESS BY
FAB: _____
FIT AND WELD: _____
INSPECTION: _____
OTHER (IF NEEDED) _____
_____ : _____
_____ : _____
_____ : _____
_____ : _____
REFERENCE LATEST ERECTION DRAWINGS FOR MATERIAL & FABRICATION INFORMATION

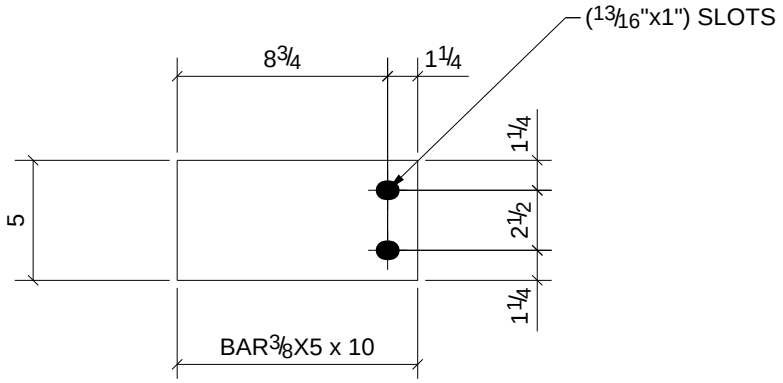

Qty.	Mark	Size	Length	Comments	Grade
2	C21				
Qty.	In Assembly				
2	p119	BAR3/8"X5"	0'-10"		A992

PROJECT NAME
OLDE ORCHARD ELEMENTARY SCHOOL

LOCATION
800 McNAUGHTEN RD. COLUMBUS, OHIO 43213

CUSTOMER
THOMAS AND MARKER CONSTRUCTION

ARCHITECT
BRAUN & STEIDL

NORTH CENTRAL FABRICATION
Mansfield, OH 44906
419-529-2744 FAX 419-529-5387 http://www.northcentralfabri

AISC CERTIFIED FABRICATOR

DESCRIPTION	DATE	DATE	JOB No.
PLATE	05/23/2011		70234
	DRAWN BY TMc	DRAWN BY TAN	DRG No. p119

MATERIAL NOTE:
W-SHAPES, CHANNELS: ASTM A992
ANGLES, S-SHAPES: ASTM A36
PLATE AND BAR: ASTM A36
PIPE: ASTM A53, GRADE B
HSS: ASTM A500, GRADE B

PROCESS CONTROL
PROCESS BY
FAB: _____
FIT AND WELD: _____
INSPECTION: _____
OTHER (IF NEEDED) _____
_____ : _____
_____ : _____
_____ : _____
_____ : _____
REFERENCE LATEST ERECTION DRAWINGS FOR MATERIAL & FABRICATION INFORMATION

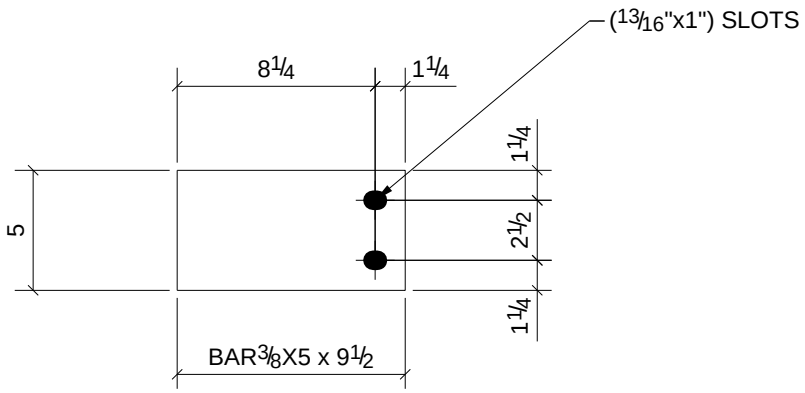

2	C26
Qty.	In Assembly

Qty.	Mark	Size	Length	Comments	Grade
2	p120	BAR3/8"X5"	0'-9 1/2"		A992

PROJECT NAME
OLDE ORCHARD ELEMENTARY SCHOOL

LOCATION
800 McNAUGHTEN RD. COLUMBUS, OHIO 43213

CUSTOMER
THOMAS AND MARKER CONSTRUCTION

ARCHITECT
BRAUN & STEIDL

NORTH CENTRAL FABRICATION
Mansfield, OH 44906
419-529-2744 FAX 419-529-5387 http://www.northcentralfabri

AISC CERTIFIED FABRICATOR

DESCRIPTION	DATE	DATE	JOB No.
PLATE	05/23/2011		70234
	DRAWN BY TMc	DRAWN BY TAN	DRG No. p120

MATERIAL NOTE:
W-SHAPES, CHANNELS: ASTM A992
ANGLES, S-SHAPES: ASTM A36
PLATE AND BAR: ASTM A36
PIPE: ASTM A53, GRADE B
HSS: ASTM A500, GRADE B

PROCESS CONTROL
PROCESS BY
FAB: _____
FIT AND WELD: _____
INSPECTION: _____
OTHER (IF NEEDED) _____
_____ : _____
_____ : _____
_____ : _____
_____ : _____
REFERENCE LATEST ERECTION DRAWINGS FOR MATERIAL & FABRICATION INFORMATION

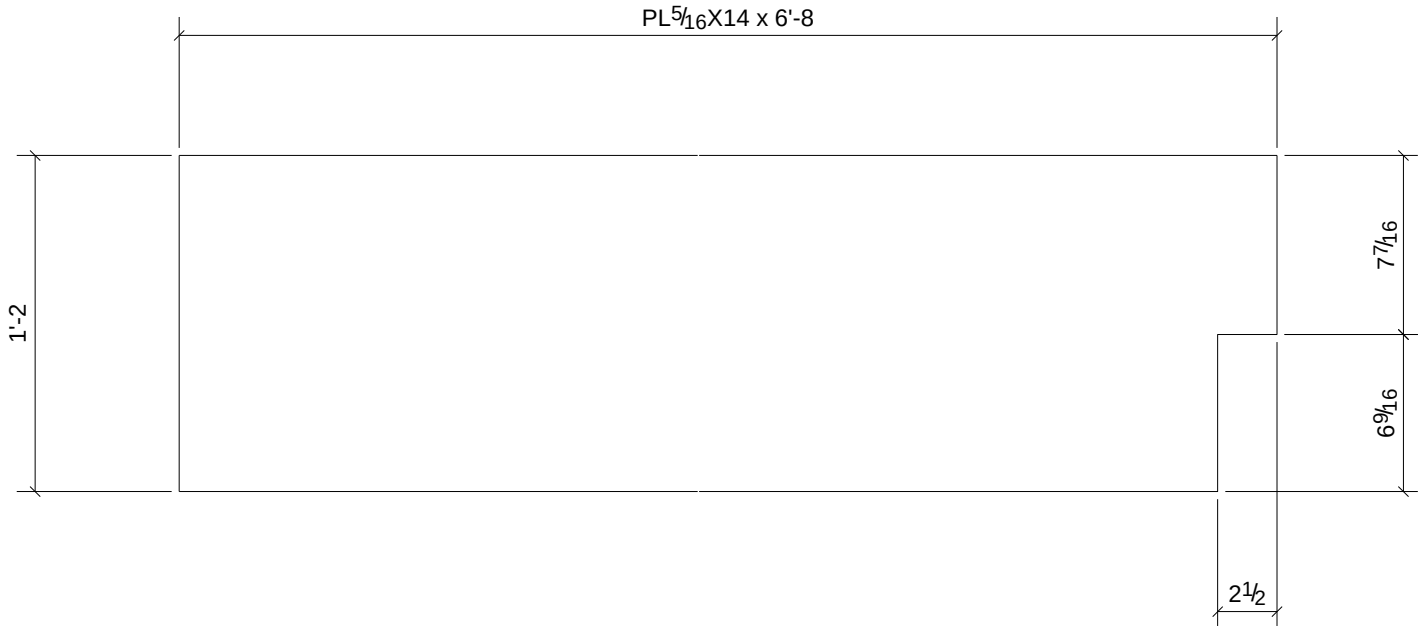

Qty.	In Assembly
1	L64

Qty.	Mark	Size	Length	Comments	Grade
1	p121	PL5/16"X14"	6'-8"		A36

PROJECT NAME
OLDE ORCHARD ELEMENTARY SCHOOL

LOCATION
800 McNAUGHTEN RD. COLUMBUS, OHIO 43213

CUSTOMER
THOMAS AND MARKER CONSTRUCTION

ARCHITECT
BRAUN & STEIDL

NORTH CENTRAL FABRICATION
Mansfield, OH 44906
419-529-2744 FAX 419-529-5387 http://www.northcentralfabri

AISC CERTIFIED FABRICATOR

DESCRIPTION	DATE	DATE	JOB No.
PLATE	05/23/2011		70234
	DRAWN BY TMc	DRAWN BY TAN	DRG No. p121

MATERIAL NOTE:
W-SHAPES, CHANNELS: ASTM A992
ANGLES, S-SHAPES: ASTM A36
PLATE AND BAR: ASTM A36
PIPE: ASTM A53, GRADE B
HSS: ASTM A500, GRADE B

PROCESS CONTROL
PROCESS BY
FAB: _____
FIT AND WELD: _____
INSPECTION: _____
OTHER (IF NEEDED) _____
_____ : _____
_____ : _____
_____ : _____
_____ : _____
REFERENCE LATEST ERECTION DRAWINGS FOR MATERIAL & FABRICATION INFORMATION

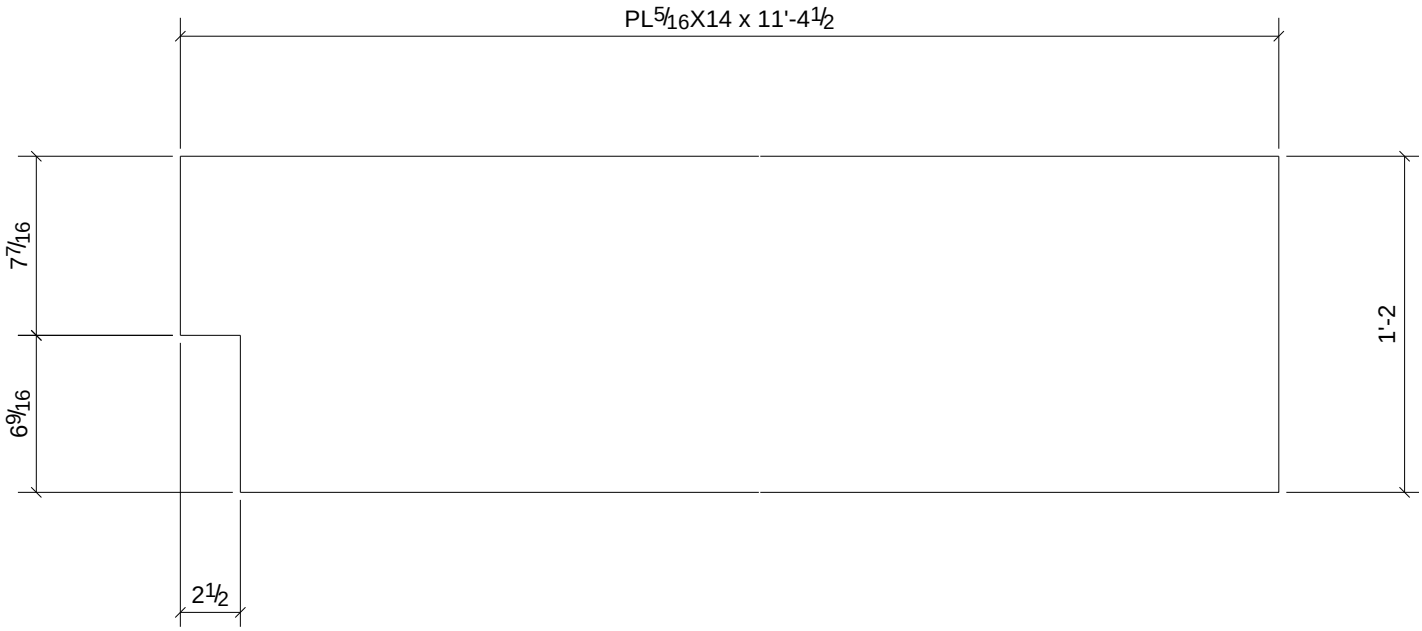

Qty.	In Assembly
1	L65

Qty.	Mark	Size	Length	Comments	Grade
1	p122	PL5/16"X14"	11'-4 1/2"		A36

PROJECT NAME
OLDE ORCHARD ELEMENTARY SCHOOL

LOCATION
800 McNAUGHTEN RD. COLUMBUS, OHIO 43213

CUSTOMER
THOMAS AND MARKER CONSTRUCTION

ARCHITECT
BRAUN & STEIDL

NORTH CENTRAL FABRICATION
Mansfield, OH 44906
419-529-2744 FAX 419-529-5387 http://www.northcentralfabri

AISC CERTIFIED FABRICATOR

DESCRIPTION	DATE	DATE	JOB No.
PLATE	05/23/2011		70234
	DRAWN BY TMc	DRAWN BY TAN	DRG No. p122

MATERIAL NOTE:
W-SHAPES, CHANNELS: ASTM A992
ANGLES, S-SHAPES: ASTM A36
PLATE AND BAR: ASTM A36
PIPE: ASTM A53, GRADE B
HSS: ASTM A500, GRADE B

PROCESS CONTROL
PROCESS BY
FAB: _____
FIT AND WELD: _____
INSPECTION: _____
OTHER (IF NEEDED) _____
_____ : _____
_____ : _____
_____ : _____
_____ : _____
REFERENCE LATEST ERECTION DRAWINGS FOR MATERIAL & FABRICATION INFORMATION

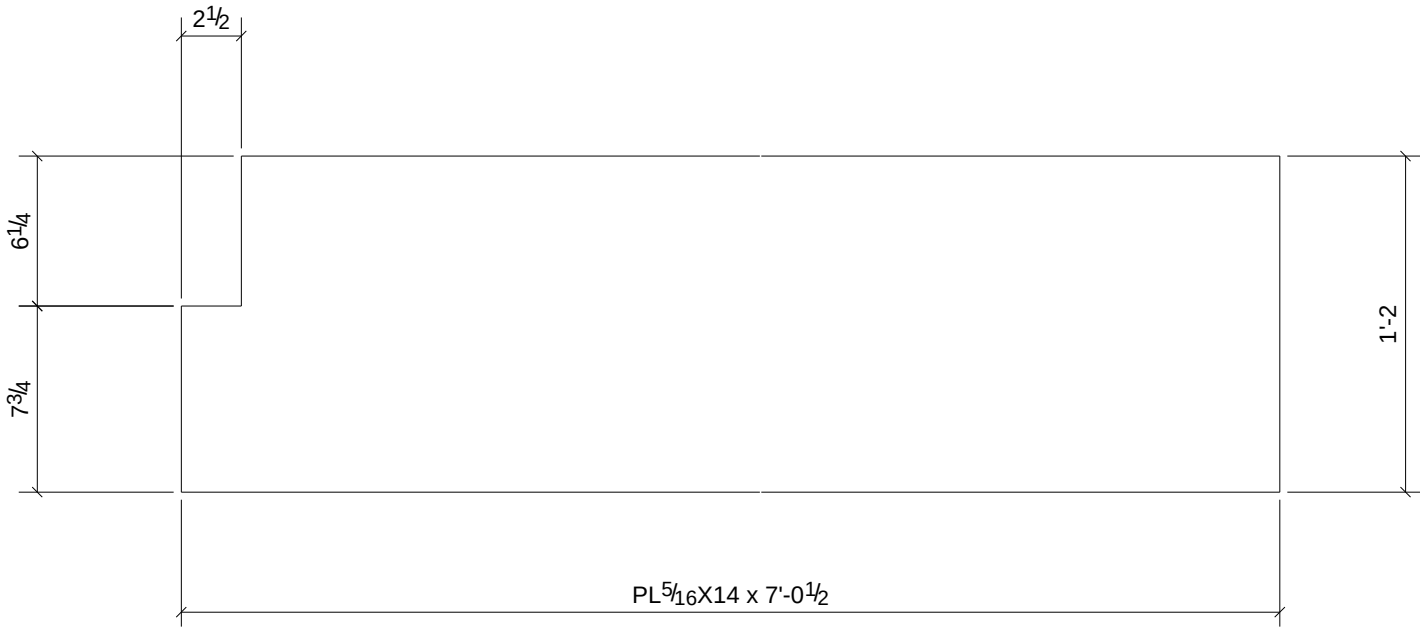

1	L34
Qty.	In Assembly

Qty.	Mark	Size	Length	Comments	Grade
1	p125	PL5/16"X14"	7'-0 1/2"		A36

PROJECT NAME
OLDE ORCHARD ELEMENTARY SCHOOL

LOCATION
800 McNAUGHTEN RD. COLUMBUS, OHIO 43213

CUSTOMER
THOMAS AND MARKER CONSTRUCTION

ARCHITECT
BRAUN & STEIDL

NORTH CENTRAL FABRICATION
Mansfield, OH 44906
419-529-2744 FAX 419-529-5387 http://www.northcentralfabri

AISC CERTIFIED FABRICATOR

DESCRIPTION
PLATE

DATE	DATE	JOB No.
05/23/2011		70234
DRAWN BY	DRAWN BY	DRG No.
TMc	TAN	p125

MATERIAL NOTE:
W-SHAPES, CHANNELS: ASTM A992
ANGLES, S-SHAPES: ASTM A36
PLATE AND BAR: ASTM A36
PIPE: ASTM A53, GRADE B
HSS: ASTM A500, GRADE B

PROCESS CONTROL
PROCESS BY
FAB: _____
FIT AND WELD: _____
INSPECTION: _____
OTHER (IF NEEDED) _____
_____ : _____
_____ : _____
_____ : _____
_____ : _____
REFERENCE LATEST ERECTION DRAWINGS FOR MATERIAL & FABRICATION INFORMATION

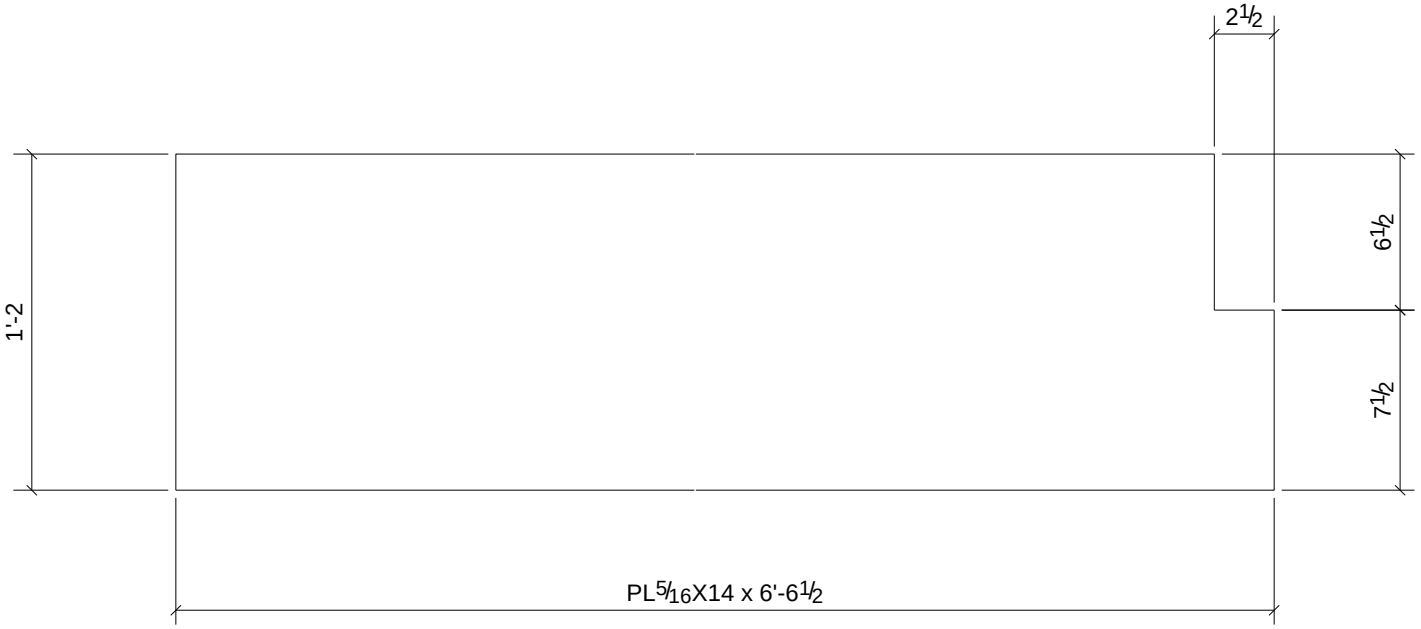

Qty.	In Assembly
2	L42

Qty.	Mark	Size	Length	Comments	Grade
2	p126	PL5/16"X14"	6'-6 1/2"		A36

PROJECT NAME
OLDE ORCHARD ELEMENTARY SCHOOL

LOCATION
800 McNAUGHTEN RD. COLUMBUS, OHIO 43213

CUSTOMER
THOMAS AND MARKER CONSTRUCTION

ARCHITECT
BRAUN & STEIDL

NORTH CENTRAL FABRICATION
Mansfield, OH 44906
419-529-2744 FAX 419-529-5387 http://www.northcentralfabri

AISC CERTIFIED FABRICATOR

DESCRIPTION
PLATE

DATE	DATE	JOB No.
05/23/2011		70234
DRAWN BY	DRAWN BY	DRG No.
TMc	TAN	p126

MATERIAL NOTE:
W-SHAPES, CHANNELS: ASTM A992
ANGLES, S-SHAPES: ASTM A36
PLATE AND BAR: ASTM A36
PIPE: ASTM A53, GRADE B
HSS: ASTM A500, GRADE B

PROCESS CONTROL
PROCESS BY
FAB: _____
FIT AND WELD: _____
INSPECTION: _____
OTHER (IF NEEDED) _____
_____ : _____
_____ : _____
_____ : _____
_____ : _____
REFERENCE LATEST ERECTION DRAWINGS FOR MATERIAL & FABRICATION INFORMATION

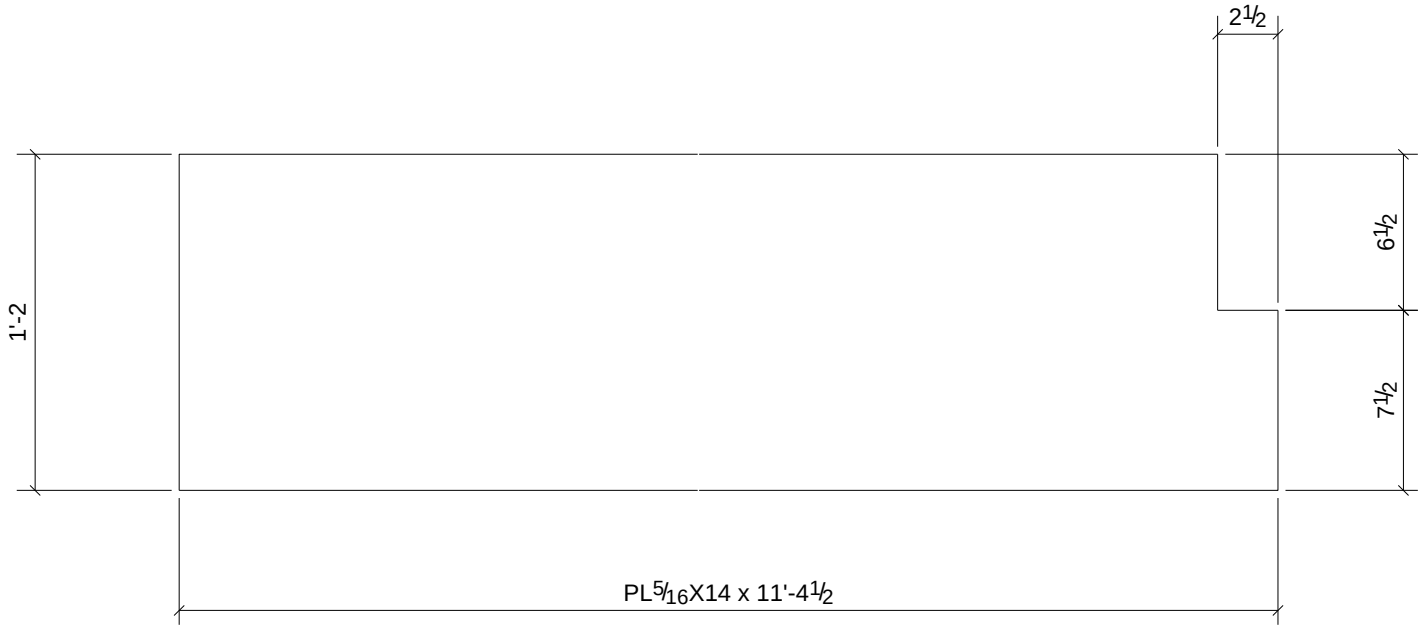

Qty.	In Assembly
2	L46

Qty.	Mark	Size	Length	Comments	Grade
2	p127	PL5/16"X14"	11'-4 1/2"		A36

PROJECT NAME
OLDE ORCHARD ELEMENTARY SCHOOL

LOCATION
800 McNAUGHTEN RD. COLUMBUS, OHIO 43213

CUSTOMER
THOMAS AND MARKER CONSTRUCTION

ARCHITECT
BRAUN & STEIDL

NORTH CENTRAL FABRICATION
Mansfield, OH 44906
419-529-2744 FAX 419-529-5387 http://www.northcentralfabri

AISC CERTIFIED FABRICATOR

DESCRIPTION
PLATE

DATE	DATE	JOB No.
05/23/2011		70234
DRAWN BY	DRAWN BY	DRG No.
TMc	TAN	p127

MATERIAL NOTE:
W-SHAPES, CHANNELS: ASTM A992
ANGLES, S-SHAPES: ASTM A36
PLATE AND BAR: ASTM A36
PIPE: ASTM A53, GRADE B
HSS: ASTM A500, GRADE B

PROCESS CONTROL
PROCESS BY
FAB: _____
FIT AND WELD: _____
INSPECTION: _____
OTHER (IF NEEDED) _____
_____ : _____
_____ : _____
_____ : _____
_____ : _____
REFERENCE LATEST ERECTION DRAWINGS FOR MATERIAL & FABRICATION INFORMATION

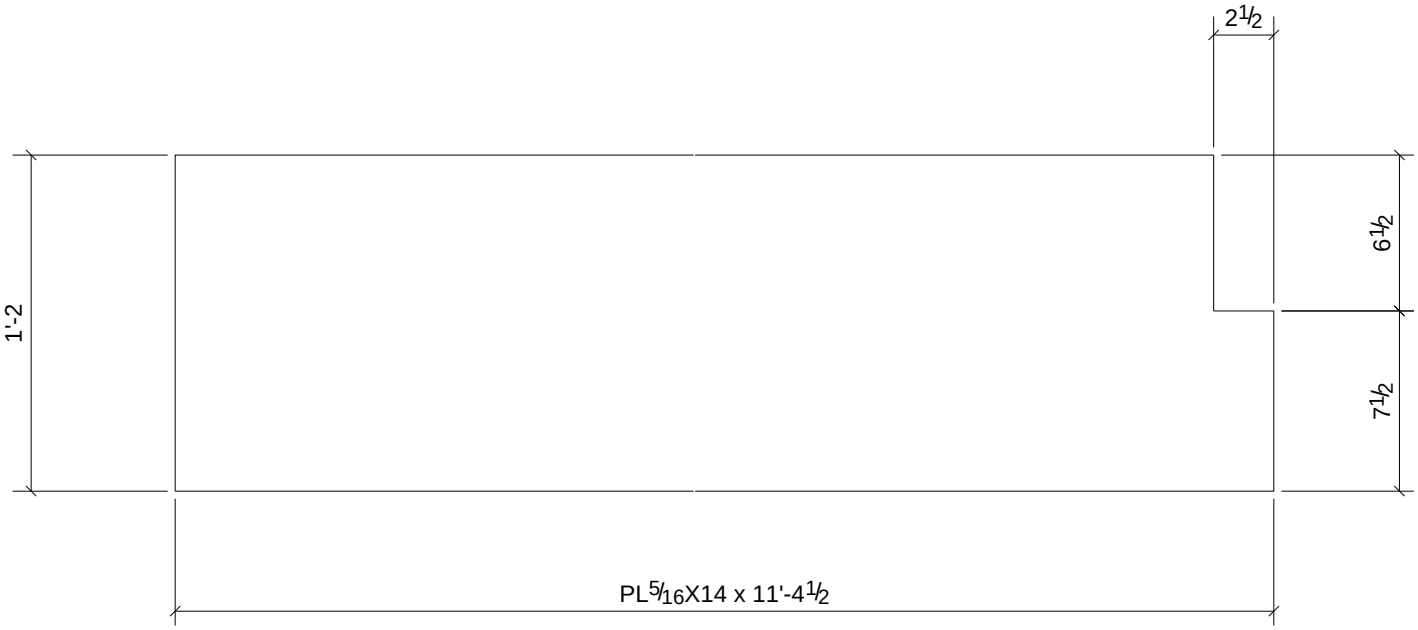

Qty.	In Assembly
2	L47

Qty.	Mark	Size	Length	Comments	Grade
2	p128	PL5/16"X14"	11'-4 1/2"		A36

PROJECT NAME
OLDE ORCHARD ELEMENTARY SCHOOL

LOCATION
800 McNAUGHTEN RD. COLUMBUS, OHIO 43213

CUSTOMER
THOMAS AND MARKER CONSTRUCTION

ARCHITECT
BRAUN & STEIDL

NORTH CENTRAL FABRICATION
Mansfield, OH 44906
419-529-2744 FAX 419-529-5387 http://www.northcentralfabri

AISC CERTIFIED FABRICATOR

DESCRIPTION	DATE	DATE	JOB No.
PLATE	05/23/2011		70234
	DRAWN BY TMc	DRAWN BY TAN	DRG No. p128

MATERIAL NOTE:
W-SHAPES, CHANNELS: ASTM A992
ANGLES, S-SHAPES: ASTM A36
PLATE AND BAR: ASTM A36
PIPE: ASTM A53, GRADE B
HSS: ASTM A500, GRADE B

PROCESS CONTROL
PROCESS BY
FAB: _____
FIT AND WELD: _____
INSPECTION: _____
OTHER (IF NEEDED) _____
_____ : _____
_____ : _____
_____ : _____
_____ : _____
REFERENCE LATEST ERECTION DRAWINGS FOR MATERIAL & FABRICATION INFORMATION

Qty.	Mark	Size	Length	Comments	Grade
2	p129	PL5/16"X14"	6'-6 1/2"		A36

Qty.	In Assembly
2	L43

PROJECT NAME
OLDE ORCHARD ELEMENTARY SCHOOL

LOCATION
800 McNAUGHTEN RD. COLUMBUS, OHIO 43213

CUSTOMER
THOMAS AND MARKER CONSTRUCTION

ARCHITECT
BRAUN & STEIDL

NORTH CENTRAL FABRICATION
Mansfield, OH 44906
419-529-2744 FAX 419-529-5387 http://www.northcentralfabri

AISC CERTIFIED FABRICATOR

DESCRIPTION
PLATE

DATE	DATE	JOB No.
05/23/2011		70234
DRAWN BY	DRAWN BY	DRG No.
TMc	TAN	p129

MATERIAL NOTE:
W-SHAPES, CHANNELS: ASTM A992
ANGLES, S-SHAPES: ASTM A36
PLATE AND BAR: ASTM A36
PIPE: ASTM A53, GRADE B
HSS: ASTM A500, GRADE B

PROCESS CONTROL
PROCESS BY
FAB: _____
FIT AND WELD: _____
INSPECTION: _____
OTHER (IF NEEDED)
_____ : _____
_____ : _____
_____ : _____
_____ : _____
REFERENCE LATEST ERECTION DRAWINGS FOR MATERIAL & FABRICATION INFORMATION

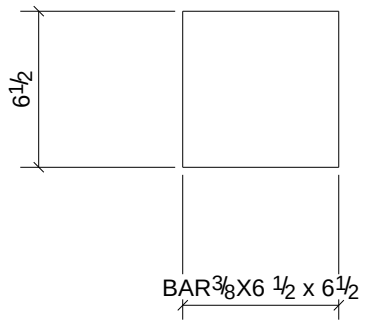

Qty.	In Assembly
2	C31

Qty.	Mark	Size	Length	Comments	Grade
2	p141	BAR3/8"X6 1/2"	0'-6 1/2"		A992

PROJECT NAME
OLDE ORCHARD ELEMENTARY SCHOOL

LOCATION
800 McNAUGHTEN RD. COLUMBUS, OHIO 43213

CUSTOMER
THOMAS AND MARKER CONSTRUCTION

ARCHITECT
BRAUN & STEIDL

NORTH CENTRAL FABRICATION
Mansfield, OH 44906
419-529-2744 FAX 419-529-5387 http://www.northcentralfabri

AISC CERTIFIED FABRICATOR

DESCRIPTION
PLATE

DATE	DATE	JOB No.
05/23/2011		70234
DRAWN BY	DRAWN BY	DRG No.
TMc	TAN	p141

MATERIAL NOTE:
W-SHAPES, CHANNELS: ASTM A992
ANGLES, S-SHAPES: ASTM A36
PLATE AND BAR: ASTM A36
PIPE: ASTM A53, GRADE B
HSS: ASTM A500, GRADE B

PROCESS CONTROL
PROCESS BY
FAB: _____
FIT AND WELD: _____
INSPECTION: _____
OTHER (IF NEEDED)
_____ : _____
_____ : _____
_____ : _____
_____ : _____
REFERENCE LATEST ERECTION DRAWINGS FOR MATERIAL & FABRICATION INFORMATION

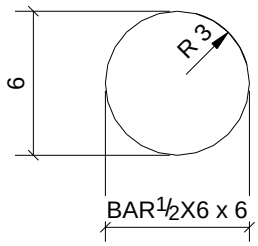

Qty.	In Assembly
1	C31

Qty.	Mark	Size	Length	Comments	Grade
1	p142	BAR1/2"X6"	0'-6"		A36

PROJECT NAME
OLDE ORCHARD ELEMENTARY SCHOOL

LOCATION
800 McNAUGHTEN RD. COLUMBUS, OHIO 43213

CUSTOMER
THOMAS AND MARKER CONSTRUCTION

ARCHITECT
BRAUN & STEIDL

NORTH CENTRAL FABRICATION
Mansfield, OH 44906
419-529-2744 FAX 419-529-5387 http://www.northcentralfabri

AISC CERTIFIED FABRICATOR

DESCRIPTION	DATE	DATE	JOB No.
PLATE	05/23/2011		70234
	DRAWN BY TMc	DRAWN BY TAN	DRG No. p142

MATERIAL NOTE:
W-SHAPES, CHANNELS: ASTM A992
ANGLES, S-SHAPES: ASTM A36
PLATE AND BAR: ASTM A36
PIPE: ASTM A53, GRADE B
HSS: ASTM A500, GRADE B

PROCESS CONTROL
PROCESS BY
FAB: _____
FIT AND WELD: _____
INSPECTION: _____
OTHER (IF NEEDED) _____
_____ : _____
_____ : _____
_____ : _____
_____ : _____
REFERENCE LATEST ERECTION DRAWINGS FOR MATERIAL & FABRICATION INFORMATION

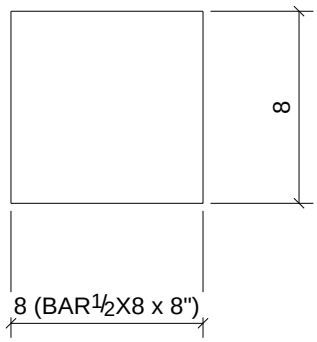

Qty.	In Assembly
1	C52

Qty.	Mark	Size	Length	Comments	Grade
1	p143	BAR1/2"X8"	0'-8"		A36

PROJECT NAME
OLDE ORCHARD ELEMENTARY SCHOOL

LOCATION
800 McNAUGHTEN RD. COLUMBUS, OHIO 43213

CUSTOMER
THOMAS AND MARKER CONSTRUCTION

ARCHITECT
BRAUN & STEIDL

NORTH CENTRAL FABRICATION
Mansfield, OH 44906
419-529-2744 FAX 419-529-5387 http://www.northcentralfabri

AISC CERTIFIED FABRICATOR

DESCRIPTION
PLATE

DATE	DATE	JOB No.
05/23/2011		70234
DRAWN BY	DRAWN BY	DRG No.
TMc	TAN	p143

MATERIAL NOTE:
W-SHAPES, CHANNELS: ASTM A992
ANGLES, S-SHAPES: ASTM A36
PLATE AND BAR: ASTM A36
PIPE: ASTM A53, GRADE B
HSS: ASTM A500, GRADE B

PROCESS CONTROL
PROCESS BY
FAB: _____
FIT AND WELD: _____
INSPECTION: _____
OTHER (IF NEEDED) _____
_____ : _____
_____ : _____
_____ : _____
_____ : _____
REFERENCE LATEST ERECTION DRAWINGS FOR MATERIAL & FABRICATION INFORMATION

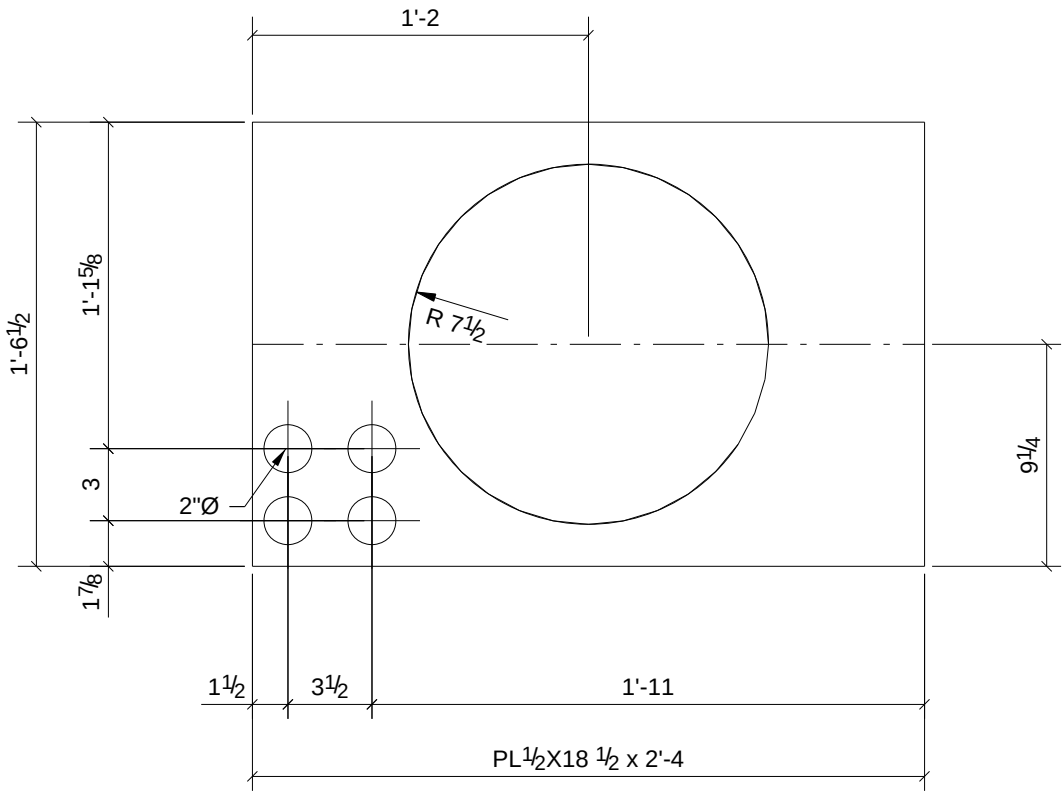

1	B36
1	B55
2	B66
Qty.	In Assembly

Qty.	Mark	Size	Length	Comments	Grade
4	p148	PL1/2"X18 1/2"	2'-4"		A36

PROJECT NAME
OLDE ORCHARD ELEMENTARY SCHOOL

LOCATION
800 McNAUGHTEN RD. COLUMBUS, OHIO 43213

CUSTOMER
THOMAS AND MARKER CONSTRUCTION

ARCHITECT
BRAUN & STEIDL

NORTH CENTRAL FABRICATION
Mansfield, OH 44906
419-529-2744 FAX 419-529-5387 http://www.northcentralfabri

AISC CERTIFIED FABRICATOR

DESCRIPTION	DATE	DATE	JOB No.
PLATE	05/25/2011		70234
	DRAWN BY TMc	DRAWN BY TAN	DRG No. p148